CONTACT INFORMATION
Mining Records Curator
Arizona Geological Survey
416 W. Congress St., Suite 100
Tucson, Arizona 85701
520-770-3500
http://www.azgs.az.gov
inquiries@azgs.az.gov

The following file is part of the

James Doyle Sell Mining Collection

ACCESS STATEMENT

These digitized collections are accessible for purposes of education and research. We have indicated what we know about copyright and rights of privacy, publicity, or trademark. Due to the nature of archival collections, we are not always able to identify this information. We are eager to hear from any rights owners, so that we may obtain accurate information. Upon request, we will remove material from public view while we address a rights issue.

CONSTRAINTS STATEMENT

The Arizona Geological Survey does not claim to control all rights for all materials in its collection. These rights include, but are not limited to: copyright, privacy rights, and cultural protection rights. The User hereby assumes all responsibility for obtaining any rights to use the material in excess of "fair use."

The Survey makes no intellectual property claims to the products created by individual authors in the manuscript collections, except when the author deeded those rights to the Survey or when those authors were employed by the State of Arizona and created intellectual products as a function of their official duties. The Survey does maintain property rights to the physical and digital representations of the works.

QUALITY STATEMENT

The Arizona Geological Survey is not responsible for the accuracy of the records, information, or opinions that may be contained in the files. The Survey collects, catalogs, and archives data on mineral properties regardless of its views of the veracity or accuracy of those data.

N. P. WHALEY
11-27-78

AMERICAN SMELTING AND REFINING COMPANY
Tucson Arizona

April 2, 1965

W.E.S.
APR 19 1965

MR. S.V.F. Cole
READ AND RETURN to JHC Desk
PREPARE ANSWERS HANDLE
INITIALS W.E.S.

J. H. C.
APR 28 1965

TO: J. H. COURTRIGHT

FROM: J. R. WOJCIK

SUMMARY - WATERLOO
HAMMERDRILLING

Experimental hammerdrilling by Whatley Drilling Co. of Tucson has resulted in reasonably accurate samples. Progress for the first 1025' averaged 50 ft. per 8-hour shift and contract drilling cost averaged $6.00 per foot.

These results have been achieved by injection of small amounts of a water solution of guar gum into the airstream and through the hammerdrill.

WATERLOO PROJECT
HAMMERDRILLING, MARCH

Whatley Drilling Co.'s Mayhew drill arrived on the property on the afternoon of March 11. On the morning of the twelfth, drilling was attempted. A lack of clay sized material immediately became apparent when water added to the airstream failed to form a wall in the hole. The driller was unable to locate bentonite in Barstow but did find some fireclay. By putting fireclay into the caving hole and mixing it with the caved material at the bit, the formation was stabilized enough to allow further drilling. Very uncertain samples were obtained in this way. Whatley located bentonite on the thirteenth and progress improved although the quality of the samples was still doubtful. At this point, the only encouraging aspect of the experimental drilling was that the holes would stand open with no sloughing. On Monday, the fifteenth, I had the Baroid Div. store in Bakersfield send us two 50 lb. sacks of a Guar Gum preparation called Lo-Loss. This is a water loss additive for low-solids content drilling fluids. It is water soluble and contains no gritty fraction that would harm the hammerdrill. Tuesday morning, we began adding a solution of approximately 0.15 lb. Lo-Loss in 5 gallons of water to the airstream by stopping the compressor, removing the airhose, and pouring the solution into the hose. This allowed the Lo-Loss to be placed right at the bottom of the hole. The resulting film prevented the air from escaping into the dry formation and made a tough wall in the hole. The samples from this time on are reasonably accurate. The nature of this formation is such that no contamination from above is possible since drilling cannot proceed until the hole is sufficiently walled to prevent caving. Some intervals could be drilled only 1 ft. at a time, but usually 3 to 5 ft. could be drilled before the hole needed a "slug." The texture of the formation resulted in varying diameters of the hole and consequently weights and volumes of samples. Nevertheless, a sample collected from any one interval could be relied upon to have been derived from that interval.

By Friday the ninteenth, Whatley had a small Myers pump mounted on the rig to inject constant amounts of Lo-Loss solution into the airstream. This pump puts out 2 gal/min. which is much more than is required to drill these holes.

After trying several different methods of controlling the rate of injection, the arrangement shown in Figure 1 was found to be the easiest to operate.

Since the texture of the formation varies widely, a great deal of experience is necessary to determine the proper amount of Lo-Loss to inject at any one time. Too little injection results in hole erosion and enlargement. Too much injection results in a muddy condition with loss of sample into wall building material. A muddy hole can be

dried up with bentonite. As experience is gained, these overdoses should become less frequent. The most common occurrence of wet hole is when drilling in reasonably solid rock such as that exposed where drill holes 1, 3 and 5 intersected the fourth level adit. Hole #5 was drilled from 120' to hole through at 149' with no fluid except when an oversight allowed about 3 gallons to be injected at 135'.

Experience as well as technique have resulted in good progress, and, I believe, reliable samples. On Monday, the twenty-ninth, the hole was advanced 115' from 165' to 280' and the drill was moved to another drill site. On the thirtieth, the new hole (#5) was collared in the sideritic breccia and advanced to 65'. This is probably the most difficult material since the fragments are too small to be easily broken by the hammerbit but too large and heavy to be easily blown out of the hole. This breccia continued to about 110' at which point the hole passed into the bedded sediments. Progress for the thirty-first was 84' and would have been more except for holing the tunnel.

Average progress the end of March is 62.5 ft. per 10-hour shift. Contract cost, excluding mobilization, is $6.00/ft. of hole. Cost of individual holes is tabulated below.

J. R. Wojcik

J. R. WOJCIK

12-11-78

Product Information

LOLOSS®

Organic Polymer

General Description

LOLOSS® organic polymer is a modified guar gum in the form of a granular powder. It can be used in fresh or salty water.

Recommended Uses

1. To increase viscosity and improve hole-cleaning capability.
2. To decrease filtration.
3. To prepare a very low-solids drilling fluid.
4. To decrease dispersion of clay cuttings.
5. To flocculate drill cuttings from water. A large settling area is necessary.

Major Advantages

Efficiency. The ingredients in LOLOSS® organic polymer are fully active; so only a small amount is needed.

Versatility. Effective in hard and salty waters, LOLOSS organic polymer furnishes both carrying capacity and filtration control.

Economy. LOLOSS organic polymer makes a one-sack low-solids drilling fluid.

Recommended Treatment

Approximate Amounts of LOLOSS® Organic Polymer

	Added to Fresh* or Salty Water		
	lb/100	lb/bbl	kg/m³
To improve hole-cleaning; decrease filtration rate.	2-4	1-2	2-5
To prepare low-solids drilling fluids.	3-5	1-2	4-6
To flocculate drill cuttings.	0.5-1	0.2-0.5	0.6-1.2

Method of addition. 1) Add slowly through jet mixer. 2) If diesel oil is not objectionable, make a slurry with diesel and pour slowly into the hopper or pump suction. 3) Sprinkle very slowly into the liquid in turbulent motion.

*LOLOSS® organic polymer may ferment unless the water is saturated with salt, the pH is high, or a preservative is added.

Packaging

LOLOSS® organic polymer is packed in a multiwall paper bag containing 50 pounds (22.7 kg).

Availability

LOLOSS® organic polymer may be purchased from any NL Baroid Service Center or from the Houston plant.

® LOLOSS is a registered trademark of Stein Hall & Co., Inc.

3" or 3½

5⅝" 4½ 5½

NL Baroid

NL Baroid/NL Industries, Inc.
P.O. Box 1675, Houston, Texas 77001

1M 9/78 H-S Printed in U.S.A.

12-11-78

Product Information

QUIK-MUD™
Liquid Viscosifier

General Description
QUIK-MUD™ liquid viscosifier is a suspension of organic and inorganic polymers in a readily emulsifiable oil. It may be added to fresh or brackish water.

Recommended Uses
1. To produce a slug of thick drilling fluid to clean the bore hole of cuttings and cavings.
2. To promote hole stability in poorly consolidated formations.
3. To reduce water seepage into permeable formations.
4. To reduce pipe torque and circulating pressure.
5. To eliminate rod vibration.
6. To prepare a low-solids drilling fluid for small-volume systems.

Major Advantages
Convenience. Small, easily transportable packages contain weather-proof plastic jugs.
Easy mixing. Add it directly to drill pipe or at pump suction.
Efficiency. Every component of QUIK-MUD™ liquid viscosifier contributes to improved performance of the drilling fluid.
Stability. QUIK-MUD liquid viscosifier does not freeze, even in cold climates.

Recommended Treatment

Approximate Amounts of QUIK-MUD™ Liquid Viscosifier

	Added to Fresh or Brackish Water		
	pints per 100 gal	pints per bbl	liters per m³
To stop rod vibration; reduce torque	1-2	0.5-1	1-3
To prepare drilling fluid for small-volume systems	4-12	2-5	5-15
To remove cuttings from the hole when water is inadequate*	0.5-1	0.5-1	0.2-0.5

Method of addition: Pour into drill pipe or pump suction.

*Pour into drill pipe or pump suction.

Packaging
QUIK-MUD™ liquid viscosifier is packed in a cardboard carton containing four plastic jugs, each containing one gallon (3.8 liters) of product.

Availability
QUIK-MUD™ liquid viscosifier may be purchased through any NL Baroid Service Center or from the Houston plant.

™ QUIK-MUD is a trademark of NL Industries, Inc.

NL Baroid

NL Baroid/NL Industries, Inc.
P.O. Box 1675, Houston, Texas 77001

1M 9/78 H-S Printed in U.S.A.

RETURNS while mud-misting look like mild snowstorm instead of customary "mist."

Mud misting helps control water-sensitive shale

OGJ
65: No. 10
March
6, 1967

ASARCO

Southwestern Exploration Division

July 14, 1978

TO: F. T. Graybeal

FROM: S. R. Davis

Cost Summary
1977-78 Assessment Drilling
Hardshell Project

Drilling for assessment year 1977-78 on the Hardshell Project was performed by Venture Drilling Company of Tucson, Arizona. Equipment used by Venture included a Chicago Pneumatic CP-672W rotary rig equipped with an air hammer bit, auxiliary air compressor (600 CFM), and sophisticated wet and dry sampling collectors.

COMPRESSOR ON RIG

Six holes were drilled and/or reentered for a total footage of 1945'. Apparent cost breakdown in total and per foot drilled follows:

Item	Cost	Cost/Foot
Roadwork & site preparation	$ 546.00	$0.28
Direct Drilling w/tax	13,989.56	7.19
Assaying (silver only)	978.50	0.50
Geology-logging, etc.	1,333.92	0.69
Supervision (Eng. & sampling)	2,562.48	1.32
TOTAL COST	$19,410.46	$9.98

Although most costs were in line with original estimates, unanticipated or higher than anticipated costs were encountered. Actual direct drilling cost was $13,451.50; an unexpected 4% state sales tax was added to this total, increasing the final cost $538.06. A rise in the cost of silver assays and minor drying charges brought the total assay cost somewhat higher than expected with no other metals yet assayed or composited. The greatest single cost aside from direct drilling was job supervision, which included surveying, supervision, and sample collection-preparation (approximately $2,562.48).

The type of drilling rig and sampling collection system employed by Venture required the full time of both driller and helper, especially in regard to high speed steel handling and racking with a vertical carousel, and the total collection of all sample material. Venture therefore offered to place a third man on the crew or have us furnish a man to collect and prepare samples. Both H.M. Stone and J.M. Wood spent considerable supervisory and sampling time at Hardshell, in part because of the 10-hour day and 5-day week worked by the Venture crew (total of 9 days), all of which resulted in a much higher than anticipated supervisory-sampling cost ($1.32/foot).

The total and supervisory costs may be slightly less than stated as charges against the same EA were also being accrued by F.R. Koutz in his mineralogical zoning study. Conspicuous charges for $855.00 were subtracted from drilling program costs, but all smaller charges were not researched.

S. R. Davis

S. R. Davis

SRD:lb

cc: NPWhaley

Venture Drilling Company
P.O. BOX 50325 — TUCSON, ARIZONA 85705
Suite 116 - 1802 West Grant Road — (602) 623-2211

3-10-78
NPW

March 3, 1978

Mr. Norman P. Whaley
Asarco, Inc.
1150 North Stone Avenue
Tucson, Arizona 85705

Subject: Percussion and Quantitative Sampling program in the vicinity of Patagonia, Arizona.(Approx. 2000 feet): Winnemucca, Nevada. (Approx. 5000 feet): Lovelock, Nevada.(Approx. 2000-3000 feet): Adin, California. (Approx. 3000-5000 feet) Each hole on the above projects to a total depth of approx. 500 feet.

PATAGONIA PROJECT

DEPTH:	0-300 Feet	300-500 Feet
	$ 6.70	$ 7.90

Winnemucca, Lovelock, and Adin Projects

DEPTH:	0-300 feet	300-500 feet
	$ 7.05	$ 8.25

Mobilization and Demobilization: None for the Patagonia Project. $ 6000.00 for the Winnemucca, Lovelock, and Adin Projects. This sum is to be reduced by $ 2000.00 for each of the above projects that is abandoned for bad or unstable ground conditions which precludes Quantitative sampling.

Standpipe: Up to 20 feet furnished and recovered at no cost.

Casing: (Caving Ground). When requested, additional casing will be furnished at cost. Installation of casing will be computed at $3.15 for reaming and #85.00/hr. for setting, Welding, and recovering. Abandon holes, as an elective, at no cost to Asarco for occassional unstable holes.

Asarco: Furnishes roads, drill sites, and a source of water.

Venture Drilling Co. Furnishes Equipment, Supplies, Tools, and Personnel for completetion of the above projects.

Warranty: Each hole will be warranted to your specified depth of 500 feet; or costs accrued against the hole will be waived.

Taxes: If applicable, Arizona and Nevada Taxes are for Asarco's Account.

Sincerely yours,

A. M. Kalaf
VENTURE DRILLING CO.

Canadian Longyear, Ltd., P.O. Box 330, 1111 Main St. W., North Bay, Ontario (705) 474-2800

J.H.C.
MAR 13 1968

AMERICAN SMELTING AND REFINING COMPANY
Tucson Arizona

March 13, 1968

To: J. H. Courtright

From: S. E. Zelenkov

Drilling Problem in Australia
Re: Slip velocity of gold under various mud-flow conditions

With regard to your request last Friday, I am submitting the following mud-hydraulic information concerning the suspension of gold by various drilling fluids.

A 0.10 inch diameter gold particle was chosen because this is larger than the expected range of from 20 to 100 mesh. A mud which will transport the larger size of 0.10 inch diameter will suffice for the smaller particles.

The attached data shows information for two types of mud. Both muds are common and easy to prepare. In these calculations, the size of particle, the size of hole and the size of pipe were held constant. For each of the muds, the mud specifications, the critical velocity, the slip velocity of the 0.10 inch diameter gold and the flow rates are shown.

To make these figures more practical, Mr. J. R. Wojcik and Mr. Charles H. Jones, III, were consulted. Mr. Jones is a mud engineer with Baroid Division . Both men thought these figures were realistic and that they represented a good starting point. Mr. Wojcik can possibly give some ideas on the type of sampling procedure that could be used.

COMMENTS:

Mud A: This mud is very viscose. The advantage of this mud is that it requires a forward circulation of 230 gallons/minute to remove the gold. At this rate of flow, hole erosion is held down to a minimum. The disadvantage of this mud is that it has a very high plastic viscosity to yield point ratio. This means that a high pump pressure will be required to start circulation. If the structure around the bottom of the hole can not stand the pressure, a loss in circulation will occur.

Mud B: This mud is considered a "light mud". Its ratio of plastic viscosity to yield point has the advantage of allowing a lower pump pressure to start circulation. The disadvantage of this mud is that it needs a pump that can generate 340 gallons per minute. This can be done, but the high circulation rate of 150 feet per minute will cause possible hole erosion.

CIRCULATION:

Reverse circulation is preferable, but is harder to maintain and to sample. If high hole erosion is experienced with forward circulation then reverse circulation should be attempted.

CONCLUSION:

As a starting point, Mud A should be used with forward circulation. This mud has the desirable viscosity to maintain a low circulating rate and to clean the hole of any gold that might exist.

At least a nine inch hole should be used. Anything less than a nine inch hole will not produce satisfactory sampling results. A larger hole requires larger drilling pipe. When the drilling pipe is large enough, a sufficient amount of fluid can be circulated more easily and it will cause the hole to be straighter.

If when the hole gets deep enough and it is found that the structure around the bit cannot support the pressure caused by Mud A, then Mud B should be tried with forward circulation. Mud B will cause less pressure at the bottom of the hole but will require a circulating rate of 150 feet per minute. If this rate produces a high erosion problem, reverse circulation should be used.

Sergei E. Zelenkov

S. E. Zelenkov

SEK:kc

Mud-hydraulic Information

slip velocity of gold under
various mud-flow conditions

Constants

Size of gold particle: 0.10 inch diameter

Size of hole: 9.0 inches

Size of pipe: 5.0 inches (OD); 4.25 inches (ID)

Variables:

Mud A:

Specifications: Density = 9 lbs/gallon
Funnel Viscosity = 60 second/quart
Plastic Viscosity/yield point = 30/10

Critical Velocity: 227 feet/minute in the pipe
250 feet/minute in the Annular space

Slip Velocity of Gold: 21 feet/minute in laminar flow @ 100 ft/min

Flow Rate:
Forward Circulation: 230 gallons/minute for 100 feet/minute in hole

Reverse Circulation: 74 gallons/minute for 100 feet/minute in pipe

Mud B:

Specifications: Density = 9 lbs/gallon
Funnel Viscosity = 35 second/quart
Plastic Viscosity/yield point = 6/3

Critical Velocity: 110 feet/minute in the pipe
116 feet/minute in the Annular space

Slip Velocity of Gold: 74 feet/minute in laminar flow
78 feet/minute in turbulent

Flow Rate:
Forward Circulation: 340 gallons/minute for 150 feet/minute turbulent flow

Reverse Circulation: 110 gallons/minute for 150 feet/minute turbulent flow

ASARCO

Exploration Department
Western USA

February 1, 1977

J. H. C.
FEB 2 - 1977

Mr. F. T. Graybeal
Tucson Office

Dyna-Drill

Last Saturday J. H. Courtright, J. C. Balla, and I interviewed Gary Heinemeyer who indicated good success with the dyna-drill at Questa. They have used the dyna-drill to obtain a 15° deviation -- continuing the hole with standard coring equipment.

Joy has proved the best contractor -- especially so because they have left-handed rods to take care of the twist-off problems.

Longest section drilled with dyna-drill was 300 feet.
Cost averages about $100 per foot.
A sufficient capacity mud pump is available to adequately run the dyna-drill.
Kerr-McGee has used the dyna-drill at Red Mountain.
Suggest N. P. Whaley thoroughly check into the presently demonstrated capabilities of the dyna-drill.

The dyna-drill might be capable of providing two or more penetrations at a sufficient horizontal distance from A-8 and A-9 to qualify as equivalent to a new hole drilled from surface. I believe Sell said he calculated the true width of the A-8 zone as 350 to 400 feet; therefore, a large horizontal offset is not needed to make an effective test.

W. L. Kurtz

W. L. Kurtz

WLK:lb

cc: TCOsborne
JHCourtright
JDSell
NPWhaley

AMERICAN SMELTING AND REFINING COMPANY
TUCSON ARIZONA

February 3, 1975

MEMORANDUM FOR: STEVE VON FAY

SUMMITVILLE, COLORADO
DRILLING AND SAMPLING

Recently, Mr. Sell visited a drilling project on the Picacho gold prospect near Yuma to gather information on reverse circulation equipment which might be applicable to Hardshell exploration.

The drilling is dry rotary; however the contractor advised that they are also equipped with down-the-hole hammer assemblies which provide protection of the sample, wet or dry, by reverse circulation.

The latter is a relatively new development and a particularly important one in drilling and sampling hard, silicified rocks such as those at Hardshell and Summitville. As previously noted (JHC to JJC, 7-09-74) the highly irregular non-uniform distribution of gold-silver values at Summitville will require close spaced drilling to effectively measure the deposit. I believe the contractor (Drilling Services Inc.) in Denver should be contacted early and plans formulated for utilizing this relatively low-cost method during the coming summer season. Both hammer and tricone might be employed, the latter being more effective in relatively soft unsilicified zones in the porphyry.

Attached are copies of data (without photos) and a diagram illustrating both drill assemblies. At Hardshell when water is encountered, a frothing agent is injected with 5 gpm water and the sample passed through a wet rotary splitter.

J.H. Courtright
J.H. Courtright

JHC:vmh

Attachments

cc: J.J. Collins w/attachments
W.L. Kurtz w/o attachments

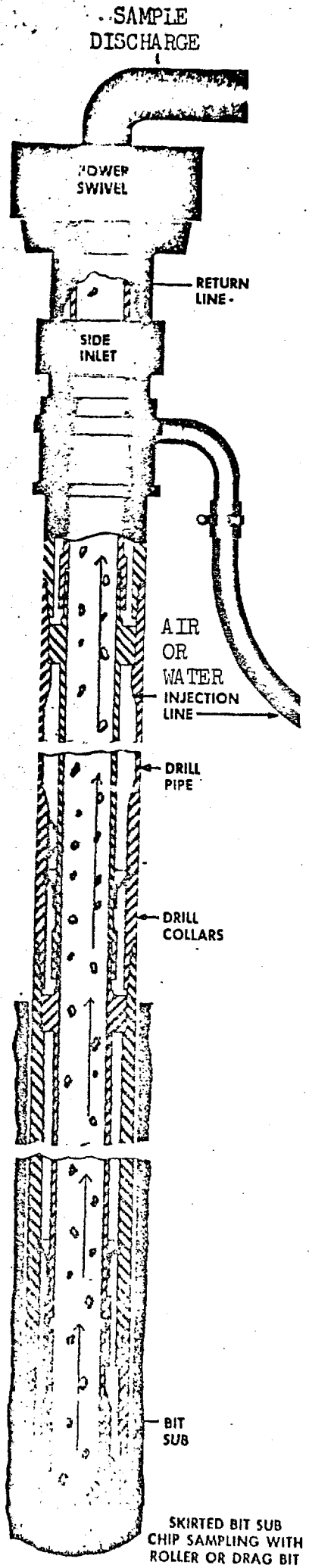

ERSE CIRCULATION (RCR) DRILLIN ETHOD

REVERSE CIRCULATION ROTARY DRILLING WITH TRICONE, DRAG AND/OR BUTTON BIT

The reverse circulation rotary drilling method utilizes double wall pipe, top or table drive rotation and side inlet for injecting the drilling fuid. In drilling operations the drilling fluid (air or water or a combination of air and water) is forced down the annulus of the inner and outer drill pipe down to the drill bit where the drilling fluid is directed to the center of the drill pipe returning to the surface with the material cut by the drill bit. The reverse circulation rotary drilling method utilizes flush jointed drill pipe and a drill bit sub designed to fit over the body of the drill bit. This design permits the bore hole to be cut with a minimum of clearance and eliminates the loss of the drilling fluid between the drill pipe and the bore hole.

By utilizing the reverse circulation rotary system wherein the geological sample is returned to the surface up the center of the double wall drill pipe rather than between the outer drill pipe and wall of the hole, sample contamination by caving formations and/or erosion from the wall of the drill hole is eliminated. The danger of losing circulation and the corresponding recovery of the geological sample is also avoided.

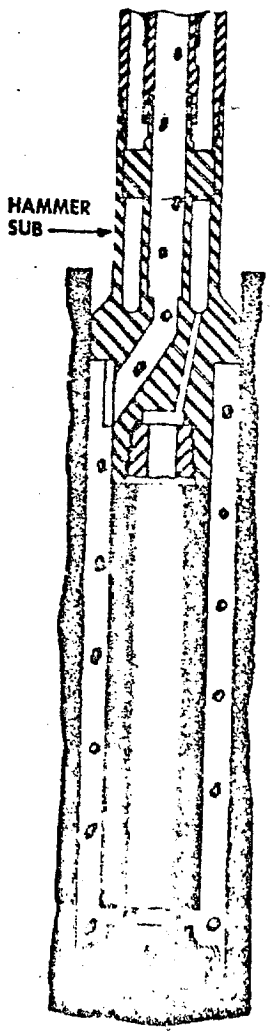

HAMMER SUB RETURNING SAMPLES FROM AIR OR LIQUID HAMMER TO SURFACE THROUGH INNER TUBE

REVERSE CIRCULATION ROTARY PERCUSSION DRILLING WITH DOWN THE HOLE HAMMER DRILL

When extremely hard formations are encountered it may be desirable, from an efficient and economical consideration, to employ a down the hole hammer in conjunction with the dual tube reverse circulation system. Should this be desirable an interchange sub is placed between the bottom of the double wall drill pipe and the top of the down the hole hammer drill. With this arrangement the drilling fluid discharged at the bottom of the double wall drill pipe is directed to the top of the down the hole hammer causing the material cut by the drill bit to flow down and around the bottom of the drill bit and then upward to the center of the double wall drill pipe.

See diagram at left.

January 24, 1975

Asarco
P.O. Box 5747
Tucson, Arizona 85703

Attention: Mr. Jim Sell

Dear Mr. Sell,

We were pleased to learn that you had visited our drill crew at Picacho and that you are interested in knowing more about out equipment and services.

Inasmuch as our brochures are not yet available for distribution, we have assembled information pertinent to the services provided by us, and the following is herewith enclosed.

EQUIPMENT

A. SHEET NO. 1

Picture No. 1 Drilling Services heavy duty reverse circulation drill unit with a depth capacity of 2,000 feet with 3½" O.D. dual wall pipe. The unit is equipped for down the hole hammer drill drilling with either 3½" or 4½" O.D. dual wall drill pipe.

Picture No. 2 Drilling Services medium duty reverse circulation drill unit with a depth capacity of 1,000 feet with 3½" O.D. dual wall drill pipe. This unit has two LeRoi high pressure air compressors which deliver a combined total of 975 CFM at 250 PSI. The unit is also equipped for down the hole hammer drilling with either 3½" or 4½" O.D. dual wall drill pipe.

Picture No. 3 Drilling services medium to heavy duty reverse circulation drill unit with a depth capacity of 1,400 feet with 3½" O.D. dual wall drill pipe. This unit is basically the same as the unit in picture No. 2, however, the drill unit is mounted on an all wheel drive carrier and the drill unit is beefed up for greater pull down and hoisting capacity. This unit is equipped for down the hole hammer drill drilling with either 3½" or 4½" O.D. dual wall drill pipe.

drilling services inc. p.o. box 29548 denver, colorado 80229 phone (303) 452-7788

Picture No. 4 This picture depicts the advantages of operating with dual wall drill pipe in voids and fissures. On This particular project we were required to drill through all sorts of old mine shafts and it is interesting to note that you can regain circulation without the need of cementing the hole and/or the addition of any additives.

Picture No. 5 This is Drilling Services standard cyclone for the collection of samples. Note that the cyclone is mounted on the side of the pipe/service truck and its mounting brackets permit the lowering or raising of the cyclone to accommodate whatever type of splitter a client may wish to employ.

B. SHEET NO. 2 (Reverse Side of Sheet No. 1)

A brief explanation of the reverse circulation drilling system with the employment of either a tricone drill bit and/or down the hole hammer drill.

C. SHEET NO. 3

Additional information relative to the drill unit shown in Picture No. 1.

D. SHEET NO. 4

Additional information relative to the drill unit shown in Picture No. 2 and No. 3.

E. SHEET NO. 5

Drilling Services has on order, for early summer delivery, the Model TH100 drill for medium to heavy duty work at either vertical or angle drilling from vertical to 75 degrees off vertical.

PERSONNEL

Within the framework of the Drilling Services Inc. organization are five key people who have a combined total drilling experience of over 60 years of which 45 hours is with the reverse circulation rotary and percussion systems. Our Supervisors and Drill Operators are highly qualified in all phases of the drilling business to ensure qualitive and quantitive results on each and every job undertaken.

CLIENTS

Drilling Services Inc. has, since coming into being in April, 1974, performed drilling services for the following clients:

Coastal Mining Company

Contact: Dr. E.L. Ohle (801) 486 8789
Mr. Steve Van Norte (602) 795 3705

Getty Oil Company

Contact: Mr. Dick Klatt (801) 487 0851
Mr. Bob Blair
Mr. Cecil Smith

The Hanna Mining Company

Contact: Mr. John Murphy (503) 874 2211

Earth Sciences, Inc.

Contact: Dr. Richard DeVoto (303) 279 7641
Dr. Mahmood Rana

Silver Resources Company

Contact: Mr. Ron Wilden (801) 272 1400

Should you wish to talk to any of the people to learn more about the type of work performed for these clients please feel free to contact any one of the people named herein.

DRILLING RATES

Drilling Services Inc. does not have any pre-set contract drilling rates and it will, upon learning of the exact job requirements i.e. depth and size of hole, formation, quantity of work etc., tailor a firm quotation to suit the client's needs. All quotations are prepared on a three way compensation basis, hourly rate only, combination hourly plus footage rate, straight footage rate and all quotations are accompanied by a job pro-forma summary. The client may, at his option, select, prior to job commencement, the plan that best suits his overall objectives.

Mr. Sell, as discussed, I am planning on visiting the Tucson area early in February and I do look forward to meeting with you. In the interim, should you require any additional information and/or material, please call me.

Thanking you for the opportunity of presenting this information to you.

Yours very truly,

O. Manchak

O. Manchak
General Manager

OM:jm
Encl.

N.B.

We are dealers for the line of Sanderson Cyclone Drilling Equipment and I am, therefore, taking the liberty of enclosing a brochure on the Sanderson Cyclone Model RO 200 Blast Hole Drill. Should there be any interest in this type of unit I can provide you with the prices and any addtional information when I visit you.

Compliments of
Tom Davis - formerly
Boyles mgr.
in Peru

S. I. B.
MAR 6 1968
L. P. E.
MAR 26 1968
W.E.S.
MAR 7 1968
J. H.
MAR 26 1968

ORIENTED CORES

MR. All Geologists
READ AND RETURN
PREPARE ANSWERS ..... HANDLE
FILE ..... INITIALS

DAVID S. ROWLEY — Chief Engineer, Christensen Diamond Products Co., Salt Lake City, Utah

CREIGHTON A. BURK — Consulting Geologist, Princeton University, Princeton, New Jersey

TOM MANUEL — Christensen-Diaboart (Australia) Pty., Ltd., Stanmore, N.S.W., Australia

WALTER F. KEMPE — Assistant Chief Engineer, Christensen Diamond Products Co.

Christensen Diamond Products Co.
1937 South Second West St.
Salt Lake City, Utah 84110
United States of America

7th PRINTING JANUARY 1968

ORIENTED CORES

D. S. ROWLEY, C. A. BURK, and TOM MANUEL

(Edited and Revised by Walter F. Kempe)

INTRODUCTION

Geologists have long recognized the value of oriented cores. The initial and most obvious use was to provide such structural data as the dip and strike of inclined strata which allowed for a more complete interpretation of structural complications. This incentive led to the development of several core orientation techniques, but none of these was entirely satisfactory and some were of questionable accuracy. As a result of this, and due to the continually increasing effort in the search for stratigraphic type traps, such structural data became of secondary importance.

However, the great mass of subsurface geologic data obtained over the past several years and the concerted geologic research efforts of most oil companies have provided the basis for exciting new potential for oriented geological data of every type. Many geologists believe that the next major oil-finding and oil-development tool will be based upon the accurate spatial orientation of these geological and engineering data.

This potential is not restricted to the petroleum industry, but is equally applicable wherever drilled cores are obtained, e. g., mineral exploration and development (uranium, metalics, non-metalics, etc.), construction engineering (damsite evaluation, tunnels, bridges, etc.), quarrying operations, and many others, Such potential will be realized only when drilled cores are oriented accurately.

ORIENTATION DEVELOPMENTS

A new method of orienting oilfield cores has been developed. The system, called Christensen-Hügel, is field-worthy having cut and oriented thousands of feet of core, using near-conventional oilfield core barrels. The basic equipment is illustrated in Figure 1, where two of the barrels are for Christensen-Hügel system coring.

Three grooves are cut into the core continuously as it enters the barrel. The reference groove has a fixed, known relation to the orienting lug which appears on the survey instrument's photograph of the compass. The multi-shot instrument permits photographs to be taken every 2 minutes, every minute, or 3 pictures per minute, depending on the clocks used.

The orienting systems use multishot directional survey instruments, the modified double-tube core barrel and diamond core bit, and the so-called Hügel scribing shoe immediately above the bit. The special shoe contains three triangular, hardened knives for grooving the core. In "System 1," the multishot instrument is located within a non-magnetic drill collar above the core barrel, and is oriented and aligned with the inner barrel, shoe and core through an extension rod. (See Figure 1 and Figure 2.)

In "System 2," also illustrated in Figure 1, the multi-shot instrument is located within the non-magnetic core barrel tubes and is tied in below the inner barrel bearing assembly. Both "System 1" and "System 2" use the same special orienting shoe (Figure 3) at the lower end of the inner barrel, and the triangular knives have been standardized so far for core barrels of the sizes shown in Table I.

An oriented core grooved with the Hügel knives and shoe (Inventor: Dr. Helmut Hügel) is illustrated in Figure 4. The actual core grooves are about 1/16-inch to 3/32-inch deep and are themselves illustrated in Figure 5. The dark core in Figure 5 has deeper grooves than are now being used, but illustrates the ability of knives to mark the core. Oriented cores up to 90 feet in length have been recovered.

The non-magnetic rubber sleeve core barrel for continuous directional orientation of unconsolidated cores is also commercially available. The essential idea of this process is illustrated in Figure 1, top drawing. The core orienting rubber sleeve barrel was developed several years ago at the instigation of Shell Oil Company and uses non-magnetic Monel and brass tubing in place of the usual alloy steels. A multishot directional survey instrument is tied directly into the rubber sleeve which, of course, cannot turn with respect to the core and thus gives a near-continuous record of magnetic core headings as a function of time and depth during the coring operation.

These three orientation methods appear to herald a reawakening in diamond coring generally and in orientation work specifically. Reliable commercial means for orienting core will upgrade the value of cores to both geologists and to reservoir engineers. Compared to indirect methods of getting geological information on a pay formation, an actual sample with known spatial position . . . in the form of oriented core . . . would inherently possess more quantitative technical data and therefore have higher value.

TABLE I

Outer Barrel O.D. (In.)	Typical Bit Size (In.)	Core Size (In.)
NXC3	2-31/32	1-7/8
4-1/8	5-1/2	2-1/8
4-3/4	6-1/8	2-5/8
5-3/4	6-5/8	3-1/2
6-1/4	7-1/2	4
6-3/4	8-9/16	4
7-5/8	8-7/8	5-1/4

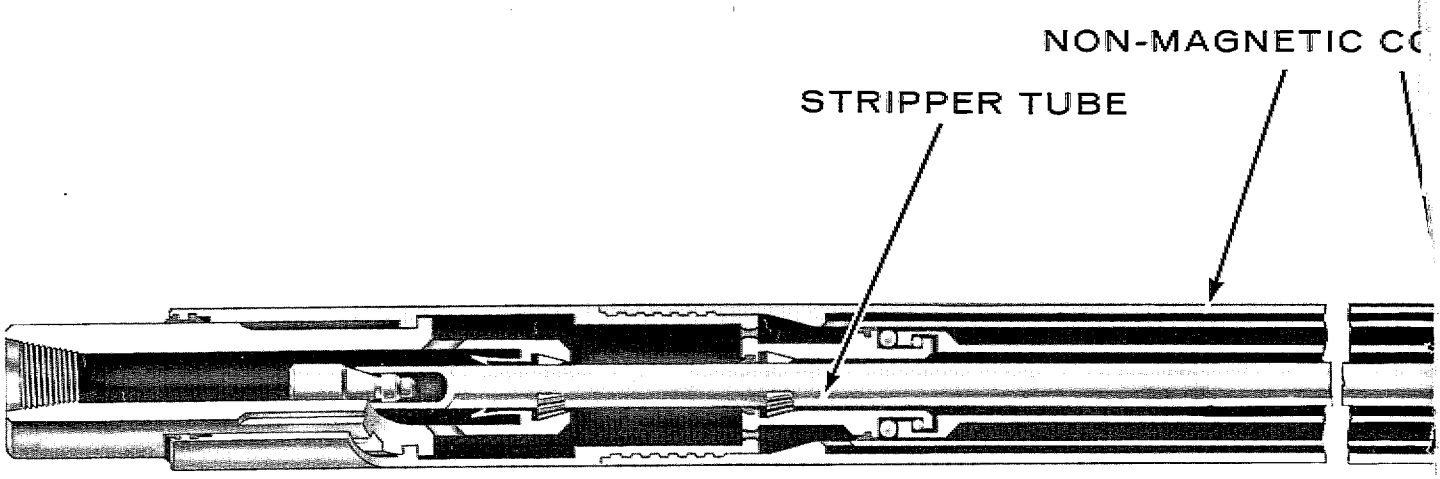

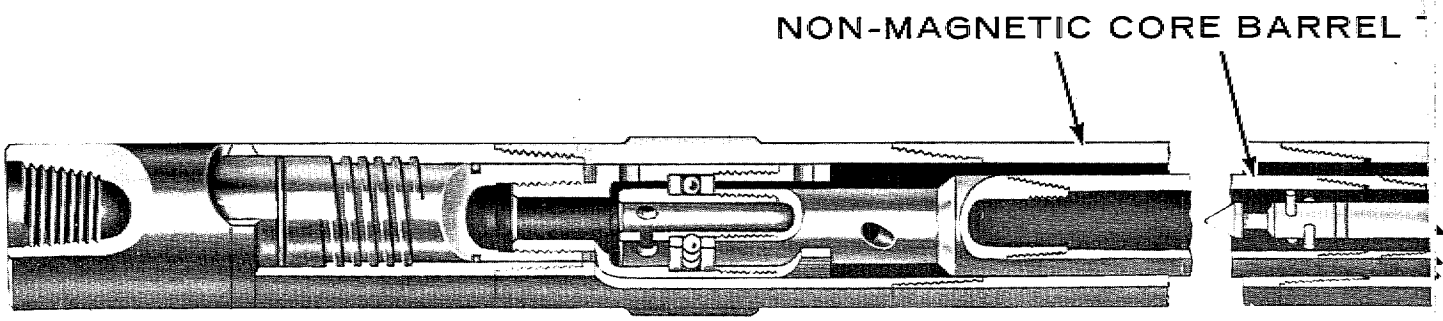

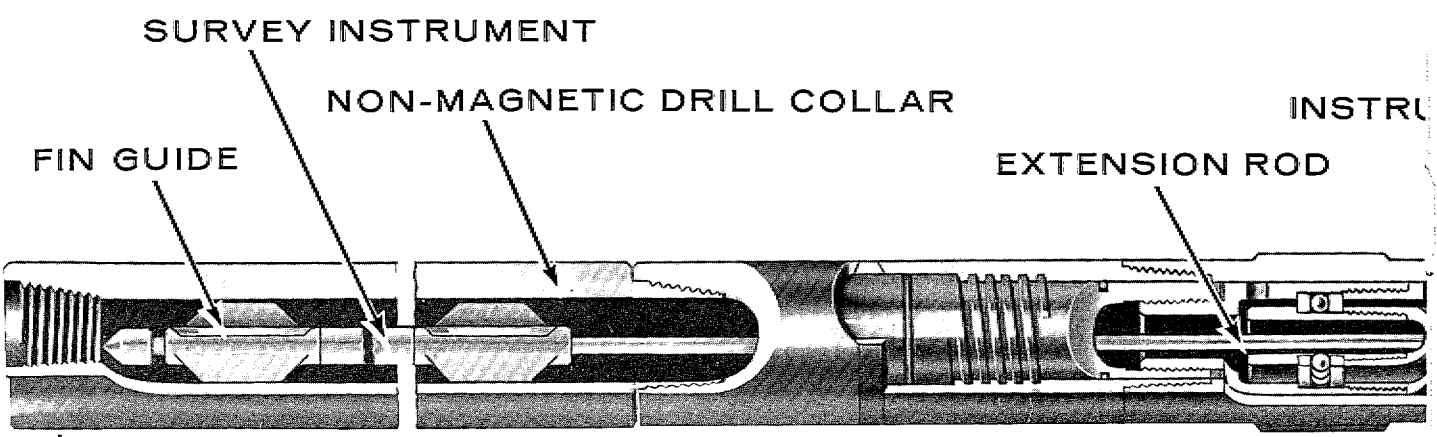

CORE ORIENTING

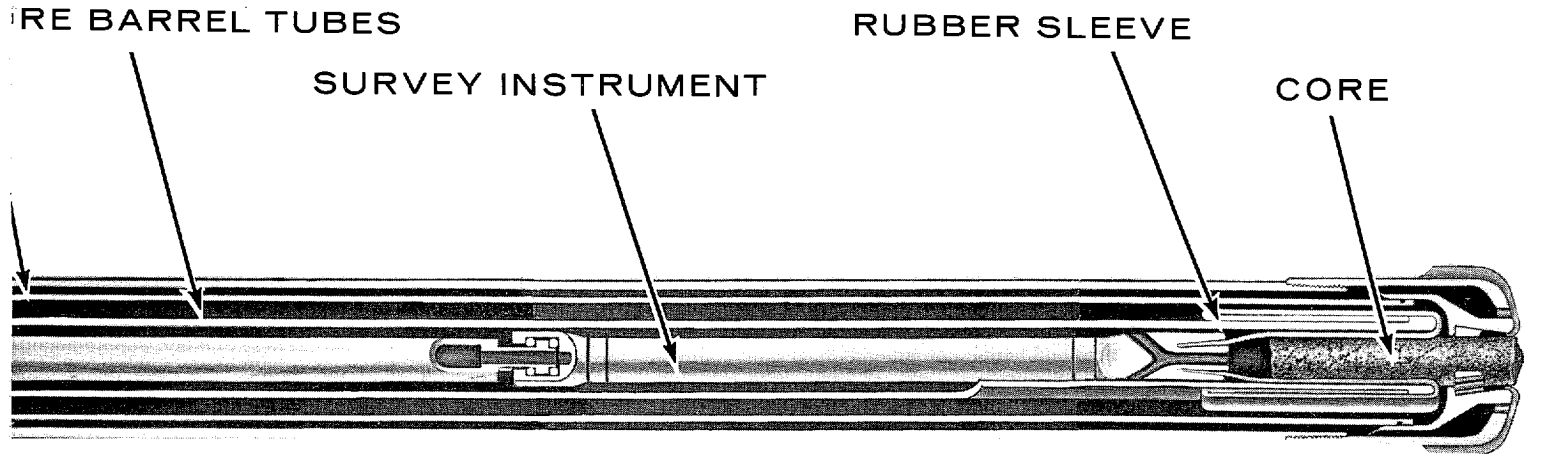

ORIENTING RUBBER SLEEVE BARREL

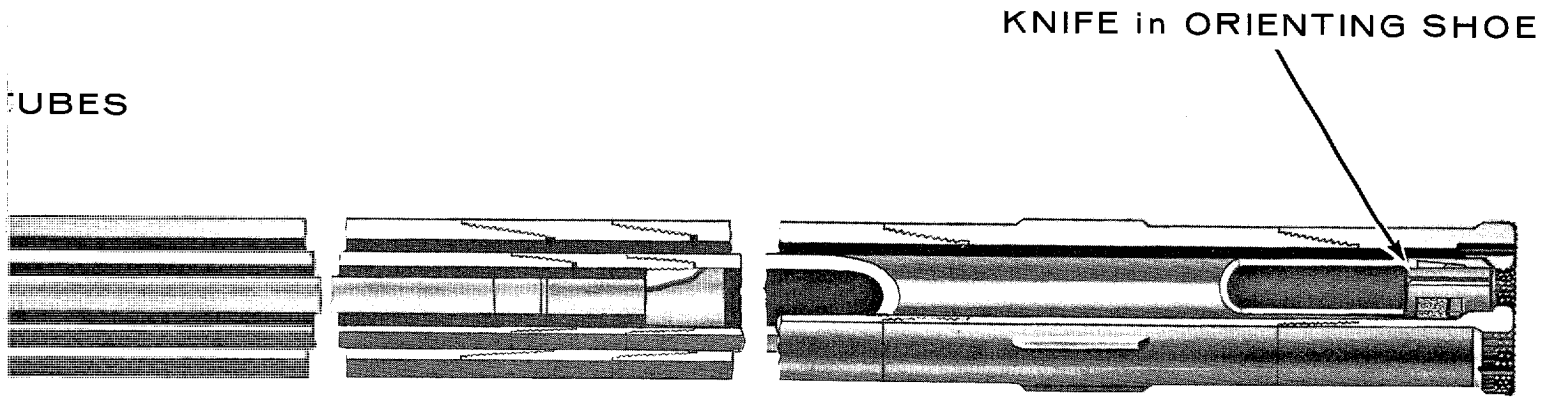

CHRISTENSEN-HÜGEL ORIENTING BARREL

(SYSTEM 2)

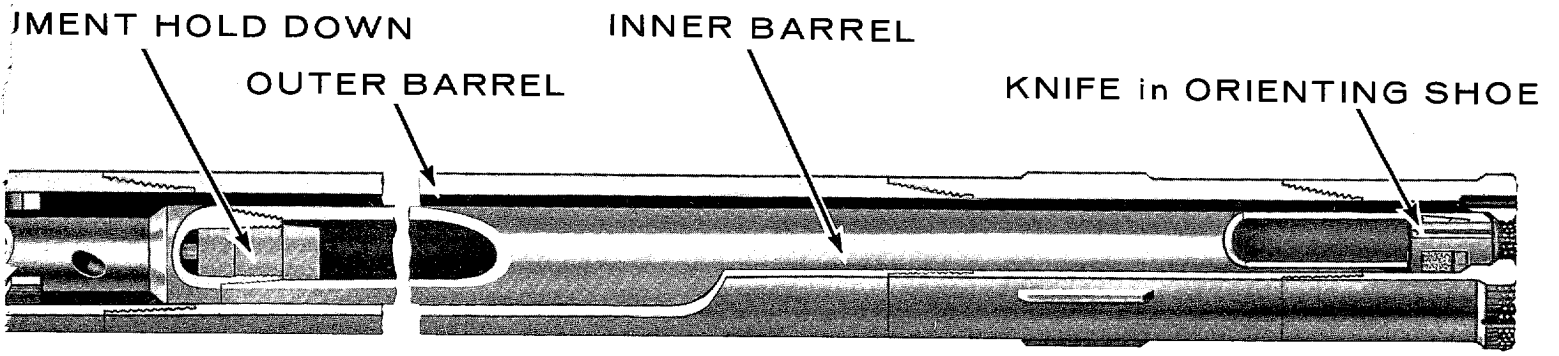

CHRISTENSEN-HÜGEL ORIENTING BARREL

(SYSTEM 1)

BARRELS (SCHEMATIC)

FIG. 1

VALUE

The outstanding significance of a reliably oriented core is that a more complete geological understanding of structural and stratigraphic complications can be developed.

VALUE IN THE PETROLEUM INDUSTRY

The value of structural data in petroleum exploration and development is well known. Producers are continually exploring new and more complex geological areas in the hope of finding multi-pay fields that have been overlooked because of structural complexity. Faults, unconformities, draped structures, salt plugs and their overhang, piercement domes, thrust sheets, folded thrusts and the endless variety of other structural complications which provide traps for the accumulation of oil and gas will always be of interest to the petroleum geologist. An oriented core can provide data at the well site necessary to make directional drilling decisions during the course of drilling a well. And, without a core, another survey must be run in order to identify the formation being drilled.

A promising potential that may never be utilized without oriented cores is the use of such features as drag folds, slickensided surfaces, joints, flow cleavage, fracture cleavage, foliation, and strain ellipsoid studies to determine the nature, direction and magnitude of structural deformation. All of these features have been used commonly in structurally complex areas where there is a minimum of surface exposure. Martinez (1958*) points out that petrofabric measurements would be "useful in a determination of structural conditions in oriented cores from massive sandstone sections with little or no bedding."

*Bibliography available upon request.

Much of the oil discovered in the last ten years, and virtually all of the major discoveries, have been stratigraphically controlled reservoir. These include sand pinch-out, channel, bar, beach, delta, "shoestring sands," reefs, bioherms, biostromes and others. The value of oriented sedimentary data in locating and extending these tenuous reservoirs is now becoming increasingly apparent.

The Research Committee of the Society of Economic Paleontologists and Mineralogists held its first symposium on the "Directional Properties of Sedimentary Rocks" at the national convention in 1956. Interest has continually risen each year and The American Association of Petroleum Geologists devoted much of their 1960 convention to a symposium on "The Geometry of Sandstone Bodies." The research departments of certain oil companies have devoted considerable time and effort to the study of directional features. Dr. E. D. McKee of the U. S. Geological Survey has established a sedimentation laboratory in Denver specifically to study directional features, and a new reference volume devoted exclusively to "Paleocurrents and Basin Analysis" was published in 1964 by Drs. Potter and Pettijohn.

In a special symposium on "Finding Ancient Shorelines," Alan Lohse of Shell Oil (1955) states that "We know something of modern barriers, lagoons and beaches – their shape, sedimentology, their paralic margins – and we are learning more rapidly. We know enough to begin this interpretive application since the competitive nature of petroleum exploration demands an expeditious utilization of new knowledge. The jump we have made in this direction is entirely justified economically. . ."

The fact that the orientation of minor depositional features reflects the orientation and geometry of large depositional bodies is not new. This was observed and explained by several geologists prior to 1900 as due to the fact that the same depositional factors which created the

FIG. 2

SCHEMATIC SURVEY INSTRUMENT WITH MULE SHOE EXTENSION

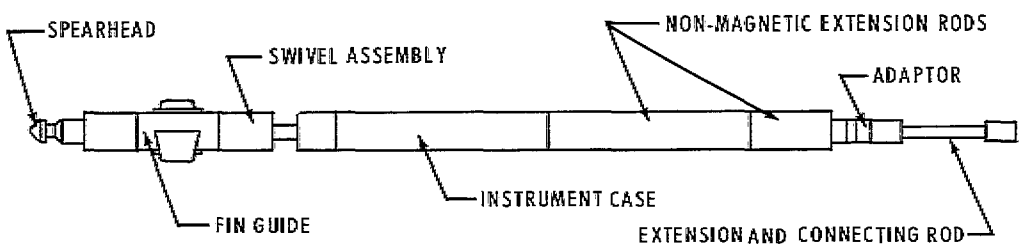

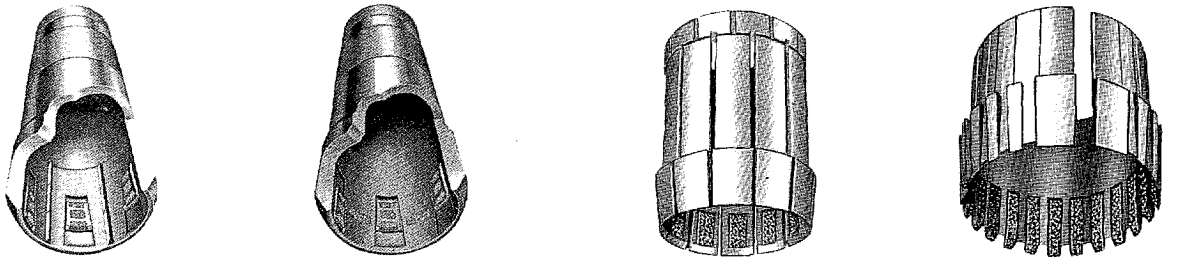

Orienting Shoe with Slip Catchers and Hügel Knives | **Conventional Shoe with Slip Catchers** | **Collet Catcher (Shoe not shown)** | **Spring Catcher (Shoe not shown)**

FIG. 3 – CORE CATCHERS AND SHOES

larger sedimentary body were also responsible for the minor features. However, the practical value of these data to petroleum exploration is new – and is apparent only as a result of concerted and extensive research efforts in the compilation of new data over the past several years. Its actual use in the subsurface still will not be possible, however, without a reliable and economic means for orienting these data in drilled cores.

The oriented sedimentary features that have been used for directional studies of exposed rocks include: wind ripples; water ripple marks; cross-bedding; forset delta beds; sculptured ripple ridges; swash marks; rill marks; flow casts; groove casts; scour and fill channels; stylolites; cross-lamination in terraces, ripple ridges, dunes and deltas; imbrication of tabular pebbles or sand grains; subaqueous flowage of hydroplastic muds; partially filled cavities; asymmetry and direction of algal and coral growth; preferential alignment of sand and silt grains and of fossils; differential erosion of buried fossils; alignment of plant fragments; load cast lineations; parting lineation; convolute bedding; rib and furrow lineation; and undoubtedly many others. Dapples and Rominger (1945) state that "... the source-direction of fine-grained fluvial and eolian sediments can be determined uniquely by use of orientation measurements and the agent of deposition of a sediment may be determinable from its orientation pattern."

The petrofabric analysis of sedimentary rocks probably offers the greatest universal value of oriented sedimentary data. Rarely are the fragmental constituents of clastic rocks "round" or "spherical." The direction and degree of alignment of these grains constitutes the "fabric" or "petrofabric" of the rock. The value of grain orientation in determining the direction of trends of ancient buried sand bodies and the location of ancient shorelines in the subsurface has been discussed by many geologists, especially Nanz (1955) and Curray (1956). McKee (1960) showed that the magnitude of depositional dip would reveal which margin of an ancient sand bar was being drilled and the orientation of the sand grains would indicate the directional alignment of the bar. Curray (1956) reports on an extensive study conducted for Carter Oil and the API of the fabric of recent coastal dune, beach and bar sands in the Gulf Coast area, and concludes that among other benefits, grain orientation is valuable "to predict trends of subsurface shoestring sands of known coastal origin by study of oriented cores." Martinez of Humble Oil (1958) developed a simple, new optical method for easily "determining the integrated effect of hundreds, and in many cases thousands," of oriented grains in order to determine the direction and degree of preferential orientation of quartz grains. He reports the results of a petrofabric study using this method with sandstones in West Texas where current directions had previously been determined by King (1948) and others by studying the direction of current and oscillation ripple marks and the orientation of aligned fossils (fusulinds). The direction of optical orientation was found to coincide with the known current direction of these sandstones. Martinez concludes that "The study of quartz grain orientation in sandstones has obvious applications in the search for and development of stratigraphically controlled deposits of economic minerals."

Thus, it is now possible to determine the petrofabric direction in an oriented core taken from a discovery well and predict with reasonable certainty the extent and directional alignment of the productive sandstone body. This provides an invaluable aid in reducing the number of dry development wells normally incurred in "punch-board stratigraphic drilling" of such fields as those described by Bass (1937) and Levorsen (1941). Geologists will also be able to plot the direction of these oriented subsurface features on regional maps and predict with greater certainty the depositional trend of particular stratigraphic units as well as those depositional areas where conditions are most favorable for the generation of attractive reservoir bodies.

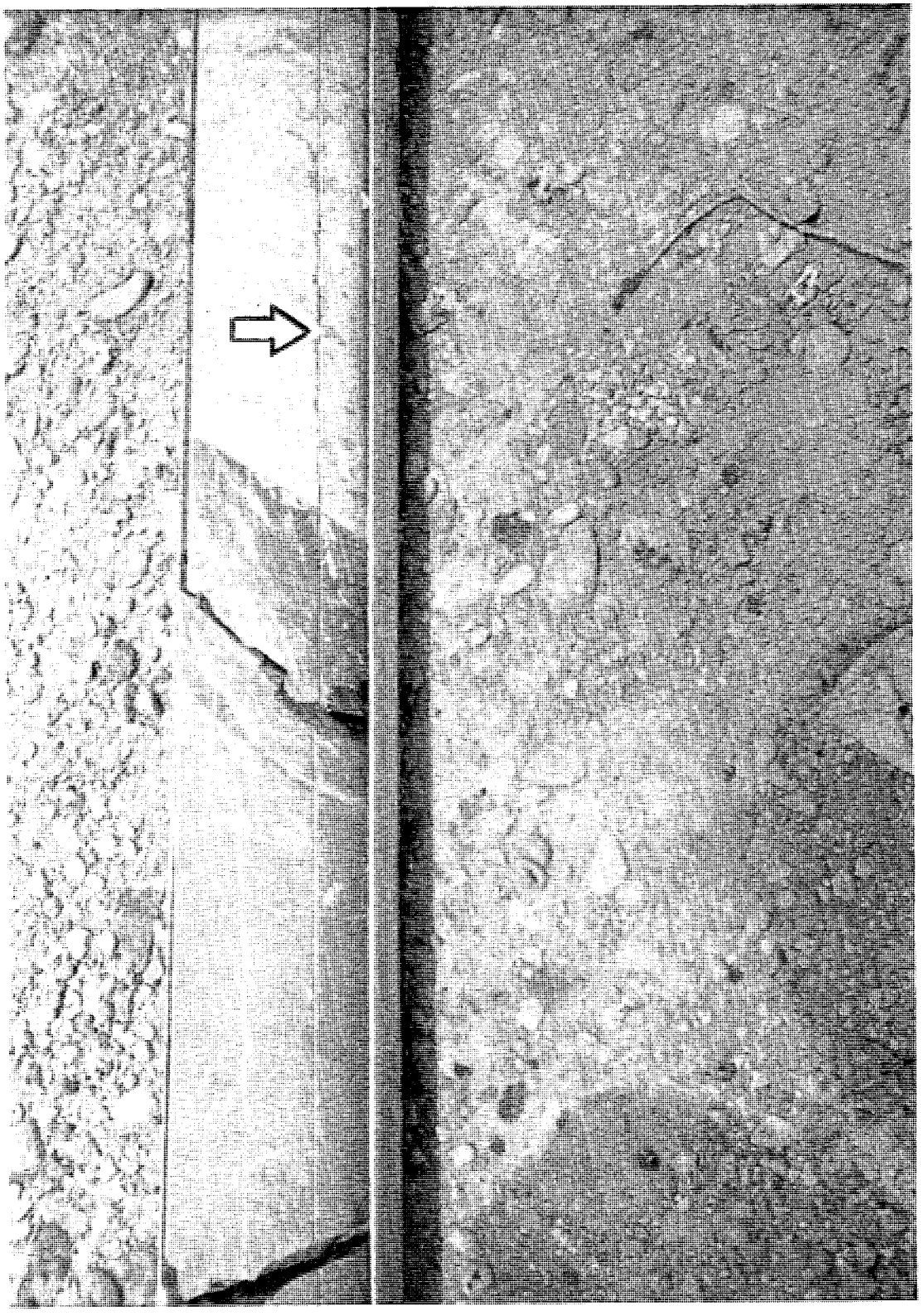

FIG. 4

A 3½" core cut at 16,890 feet and scribed with the Christensen-Hügel orienting shoe.

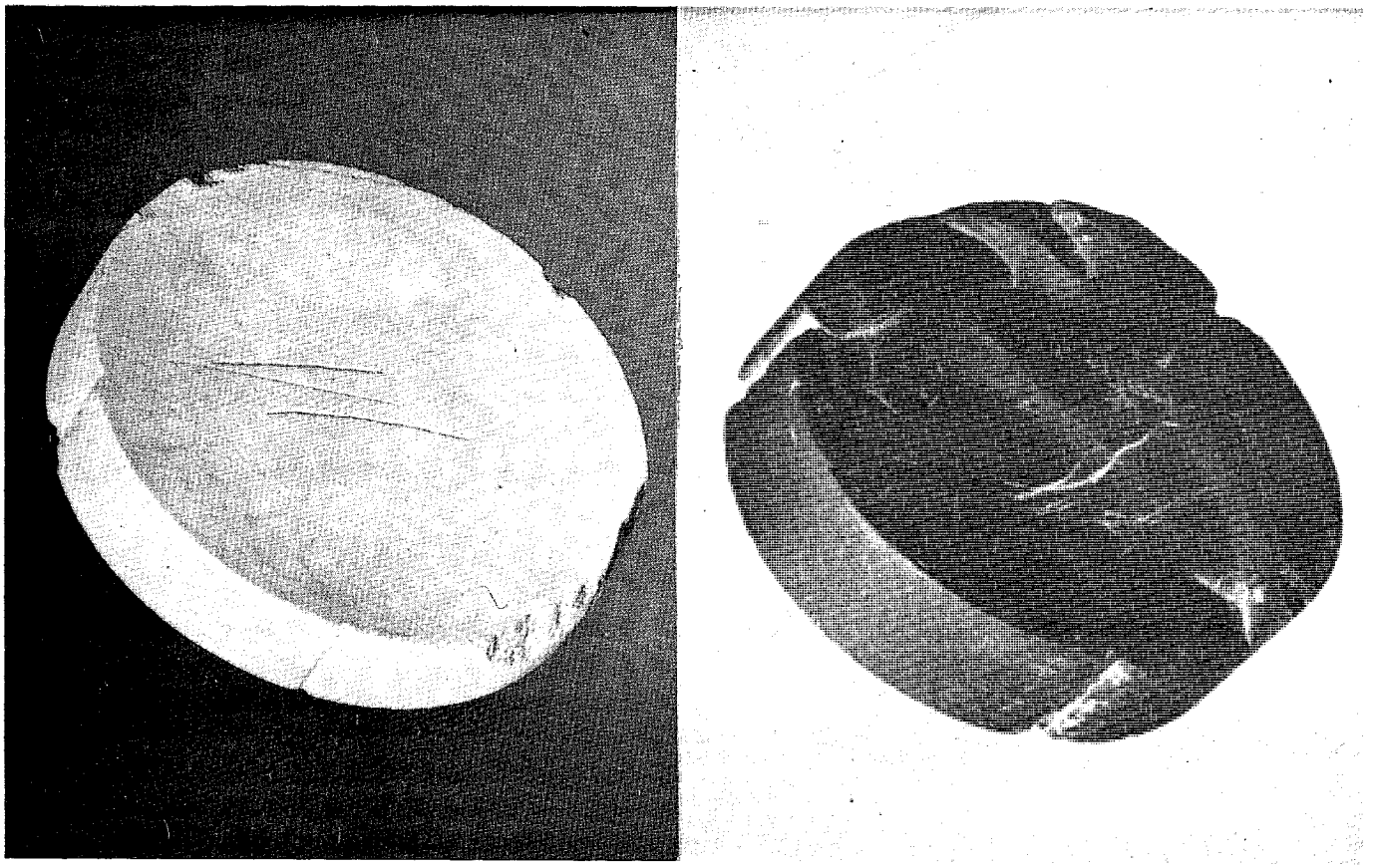

FIG. 5
CORES GROOVED USING HÜGEL KNIVES IN INNER TUBE SHOE

Other features commonly apparent in sandstone cores are ripple marks and cross-bedding. Most surface orientation studies have utilized these features since they are so abundant, and easily studied. The published material on the orientation of these features is extensive and in each case the directional alignment is shown to be related to the directional trend of deposition. Cross-bedding is of special value in defining and predicting the deposition of a deposit of channel sands. Ripple marks, fill marks, marginal grooves, etc., are of most value in establishing the directional alignment of beach sands.

Shrock (1948) has shown how partially filled sedimentary cavities can be used to establish the amount and direction of initial dip of strata, indicating the location of buried hills, bioherms, reefs, offshore bars, etc. Such cavities are commonly found in algal spheroids, colites, fossils, solution cavities, etc. Stylolites also can be used to show amount and direction of initial and subsequent dip (Shrock, 1958). Structures of sub-aqueous flowage and slumpage also show direction of initial dip and may indicate the location of area of local uplift beneath unconformities.

A great deal of literature has become available recently describing the orientation of directional sedimentary features associated with turbidity deposits (especially Crowell, 1955). Turbidites are important in the depositional history and control of oil production in the Tertiary basins of California and have been studied in these basins in some detail (Natland and Kuenen, 1959). The alignment of fossils, fossil fragments, and even plants have been studied to determine the direction of ancient depositional currents. Shrock (1948 states that "Examples of selectively oriented fossil fragments are to be found in rocks of all ages, from earliest Cambrian to coquinas on present-day beaches . . . oriented brachiopod and Pelecypod valves are common and widespread through strata of the later Paleozoic, and the latter are characteristics of both Mesozoic and Cenozoic shell beds the world over." Recent studies have greatly increased the interpretive value of such oriented material (Miller and Youngquist, 1948; Colton and De Witt, 1959; Pelletier, 1958).

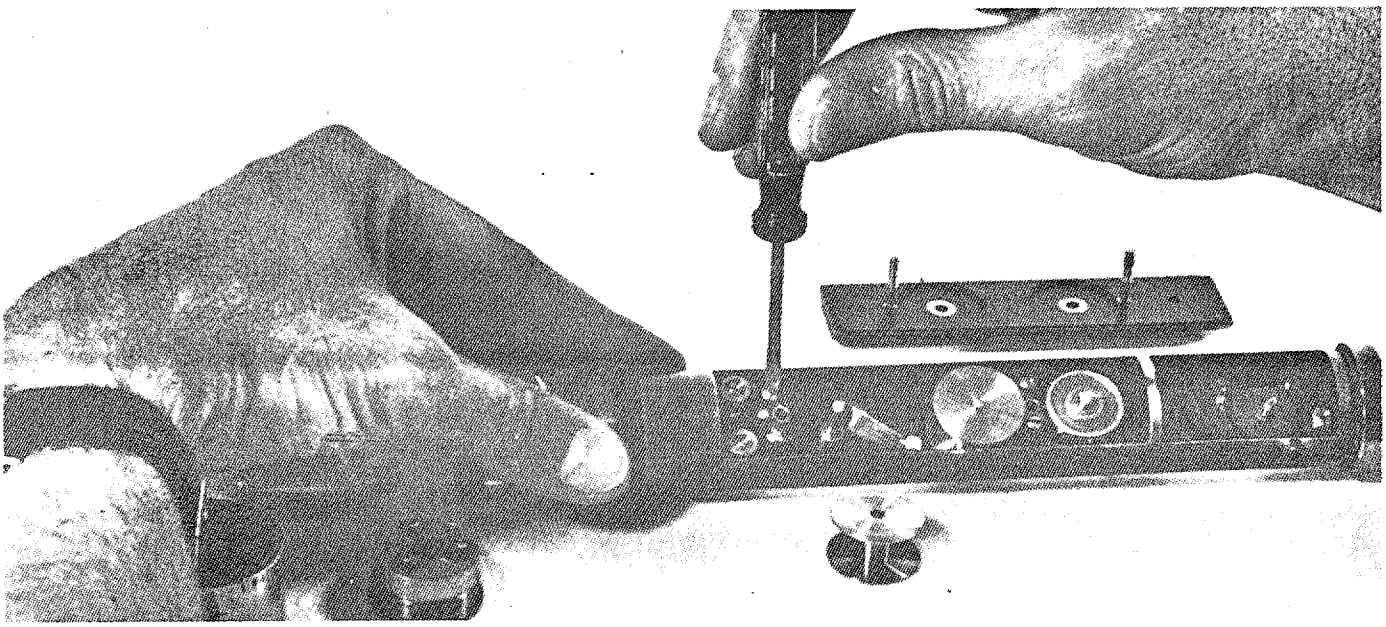

ILLUSTRATING SIZE OF SURVEY INSTRUMENT FOR ORIENTATION
(Adjustments in Film Section)

FIG. 6

In recent studies by Sutton (1959) and Horn and Martin (1959), the alignment of oriented sedimentary features have been used to correlate unfossiliferous strata and to interpret complex structural relationships. This would be of value in such stratigraphically complex areas as the Rocky Mountains, which are becoming increasingly important oil and gas producing reservoirs.

Laudon and Bowsher (1941), Umbgrove (1947) and others have shown that the prevailing wind direction and predominant current direction are both important factors in controlling the direction and extent of modern and ancient reef growth. The results of these depositional forces are preserved in the rocks as the various oriented sedimentary features described above. In addition, the detrital reef material, carried away during the growth of the reef, should show a fabric orientation to indicate the direction of the buried reef from which it was derived. Also, once a reef has been penetrated, the direction of growth of reef organisms will point toward the margins of the reef, thus aiding an orderly plan of development drilling, keeping dry development wells to a minimum.

These are but a few of the most apparent uses for reliably oriented sedimentary data. As the value of such oriented features becomes generally known, geologists will undoubtedly discover an endless variety of yet unknown directional sedimentary features which will further increase our ability to find oil economically.

The potential value of oriented cores to the petroleum engineer has never been fully exploited. Krumbein and Sloss (1951) report that "In addition to its importance in reconstructing sedimentary processes, particle orientation in oil sands has an important effect on the preferential flow of fluids through the sand body." Numerous studies show that the horizontal permeability in one direction is as much as twice the horizontal permeability taken at right angles (Johnson and Hughs, 1948; Griffiths, 1950, 1953; Griffiths and Rosenfeld, 1951, 1953; Rabinovitz, 1958). In clastic rocks, this is certainly largely due to grain orientation. In carbonate rocks, it is apparently due to solution or cementation along aligned fractures or joints, or to fossil alignment.

Many engineers have expressed a desire to know the directional permeability within an oilfield so that secondary recovery methods and injection wells can be selected to keep costs at a minimum and to obtain the greatest benefit of a flood.

With the availability of an economical and reliable means for orienting cores, it is apparent that we have a basis for: 1) curtailing unnecessary development drilling and minimizing the number of dry development wells; 2) generally improving our exploratory techniques by making more geological data available, and specifically by providing a technique for locating stratigraphic traps through the use of critical geological data that can be obtained in no other way; and 3) greatly increasing the initial and secondary recovery potential of our producing fields.

It is likely that if the cost of such orientation is within reason all cores will be oriented simply as a matter of course. In areas of nominal coring, spot cores can be taken systematically in order to obtain the desired directional data. This will be especially true in areas of lenticular sands, "punchboard drilling," and marginal recovery – where a dry development well may be the margin of profit.

VALUE IN THE MINING INDUSTRY

Petrofabric studies are not new to the mining industry. In many cases such studies are critical. Much of the exploration and development work in igneous and metamorphic rocks is based almost exclusively on such directional features, and mining reports are commonly full of orientation diagrams and maps. Books have been devoted exclusively to the subject (e.g., Knopf and Ingerson, 1938; Cloos, 1957). Yet this value has been extended into the subsurface only with the greatest difficulty because of the apparent lack of a suitable means for orienting mining cores. Almost without exception, ore bodies are oriented according to directional features in the enclosing rocks. Oriented cores, that are economical and accurate, are of extreme value in the exploration and development of mining prospects in igneous and metamorphic rocks.

Ore deposits concentrated in sedimentary rocks are similarly controlled by the stratigraphic features of the host rock. Stern (1934) reported an interesting application of the use of oriented and differentially eroded reed flutings of calamite stems in deciphering the geological control of a quicksilver deposit in Arkansas.

Recent work by several geologists (McKee, 1953; Stokes, 1953, 1954; Stokes and Sadlick, 1953; Jones, 1954) has shown the value of sedimentary features in controlling the deposition and disposition of uranium ore bodies.

Lowell (1955) reports the results of one such study as follows: An outcrop of sandstone containing seven distinct ore bodies was mapped on the surface, paying special attention to the orientation of crossbeds, asymmetric ripples, and lineation within the ore bodies. Three exploratory holes, 25' to 50' apart, were drilled several hundred feet behind each ore body on an individual line projected from the oriented sedimentary features examined. Six of the buried ore bodies proved to be within 20° of the orientation direction established in the surface exposures. He states that "This saves unnecessary drilling which might have been expended in "hit or miss" drilling behind the outcrop."

It seems likely that mining cores would preferably be oriented as a matter of course.

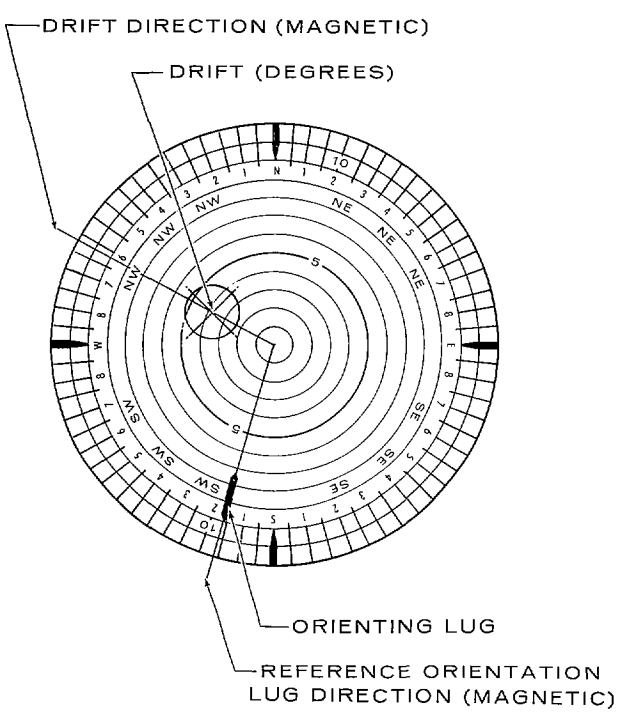

FIG. 7 – PHOTOGRAPH OF COMPASS

ACTUAL FILM SIZE

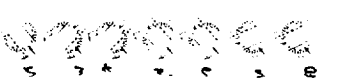

CHRISTENSEN DIAMOND PRODUCTS

CORE ORIENTING LOG

Date 12-1-66
Page 1 of 1

WELL INFORMATION
Company: Calif. Dept. of Water Resources
Contractor:
Well Name: Pyramid Power Plant PP-32
County: Los Angeles State: Calif.
Hole Size: 5 1/4 Core Barrel: 4 7/8
Formation Name: Ridge Basin
Formation Description: Silty Shale

PERFORMANCE
Interval Cored: Finish 75'
Start 65'
Footage Cored:
Remarks:

MULTISHOT INSTRUMENT
Make:
Serial No.
Clock Interval: 1 Min.
Station Record By: J. Pairish
Film Read By: J. Pairish

CORRECTIONS
Declination 16 Degrees ☒ East ☐ West
Azimuth Correction for Declination
East Declination ☐ Add to Azimuth
West Declination ☐ Subtract from Azimuth
Reference Groove Correction:
From Above, Groove is 0 Degrees ☐ Right ☐ Left of Orientation Lug.
☐ Right Add to Lug Azimuth
☐ Left Subtract from Lug Azimuth

STATION				DRIFT			ORIENTATION							DIP STRIKE			REMARKS
No.	Time	Picture No.	Depth	Angle	Direction Magnetic	Direction True	Orienting Lug, Magnetic Direction	Orienting Lug, Magnetic Azimuth	Declin. Corr.	Dr. Lug Az. True	Reference Groove Corr.	Reference Groove Az. True	Reference Groove Direction True	Dip Dir.	Dip Angle	Strike	
1	56:00	1	66	1	S 18 E	S 2 E	N 25 E	025	16 E	041		041	N 41 E	N65W	20W	N 25 E	laminated
2	72:00	2	67	1	S 20 E	S 4 E	N 33 E	033	16 E	049		049	N 49 E	N73W	21W	N 17 E	silty shale
3	92:00	3	68	1	S 17 E	S 1 E	N 36 E	036	16 E	052		052	N 52 E				
4	108:00	4	69	1	S 14 E	S 2 W	N 47 E	047	16 E	063		063	N 63 E				
5	124:00	5	70	1 1/4	S 15 E	S 1 W	N 52 E	052	16 E	068		068	N 68 E				
6	166:00	6	71	1 1/4	S 12 E	S 4 W	N 63 W	307	16 E	323		323	N 37 W				
7	184:00	7	72	1	S 10 E	S 6 W	N 48 W	312	16 E	328		328	N 32 W	N64W	26W	N 26 E	Laminated
8	198:00	8	73	1	S 16 E	S	N 42 W	318	16 E	334		334	N 26 W	N59W	21W	N 31 E	silty shale
9	216:00	9	74	1	S 14 E	S 2 W	N 34 W	326	16 E	342		342	N 18 W	N63W	16W	N 27 E	"
10	232:00	10	75	1	S 16 E	S 1 W	N 28 W	332	16 E	348		348	N 12 W				
1	2	3	4	5	6	7	8	9	10	11	12	13	14	15	16	17	18

FIG. 8

SAMPLE OF ACTUAL FIELD DATA FROM CORE ORIENTATION JOB

VALUE IN THE CONSTRUCTION INDUSTRY

The value of oriented cores in construction engineering seems similarly apparent. Thousands of feet of cores are taken at damsites in order to determine zones of structural weakness, planes of foliation, lineation, joints, fractures, etc., in order to establish a sound structural location for the abutments and to modify the structural design, if the data obtained require it. These features are now oriented spatially by complex extrapolation between core holes, and usually on a stereographic projection, which does not ordinarily account for local faults or other complications between core holes.

Structural data are equally useful in the construction of bridges, large buildings, tunnels, docking facilities, etc. Economically and accurately oriented cores can greatly reduce the cost and increase the value of drilling evaluation, and oriented cores may become a part of the standard formation evaluation program in such projects.

GONIOMETER

After the core has been cut, oriented and brought to the surface it is correlated with the core orienting log.

The drift inclination and direction are then used to fix the sample in a goniometer. Dip direction, dip angle and strike are then read directly from the goniometer (Figure 9). Information obtained from core plugs taken from the parent core may then also be oriented.

CORE ANALYSIS

Core laboratories have established oriented permeability measuring techniques to provide permeability magnitude data together with non-ambiguous directional data in both the horizontal plane and in three-dimensional space.

ALIGNMENT

To assure perfect correlation or alignment of the reference mark on the multishot instrument with the reference knife of the core shoe, an optical alignment instrument is used. This alignment may be accomplished in the shop as shown in Figure 10. Center punch marks at the thread joints assure proper reassembly at the drilling site. This alignment may also be made by hoisting the inner tube

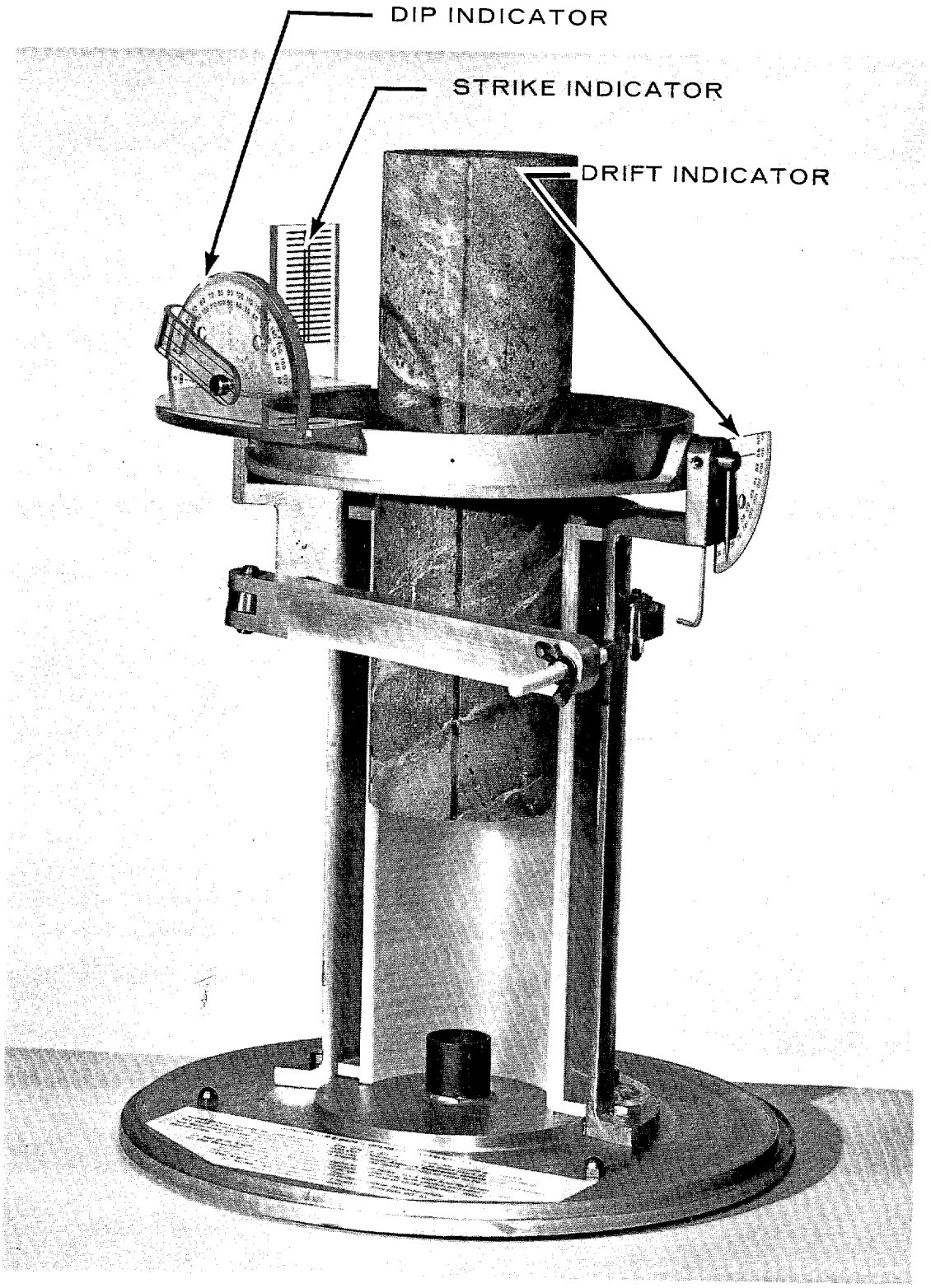

GONIOMETER

FIG. 9

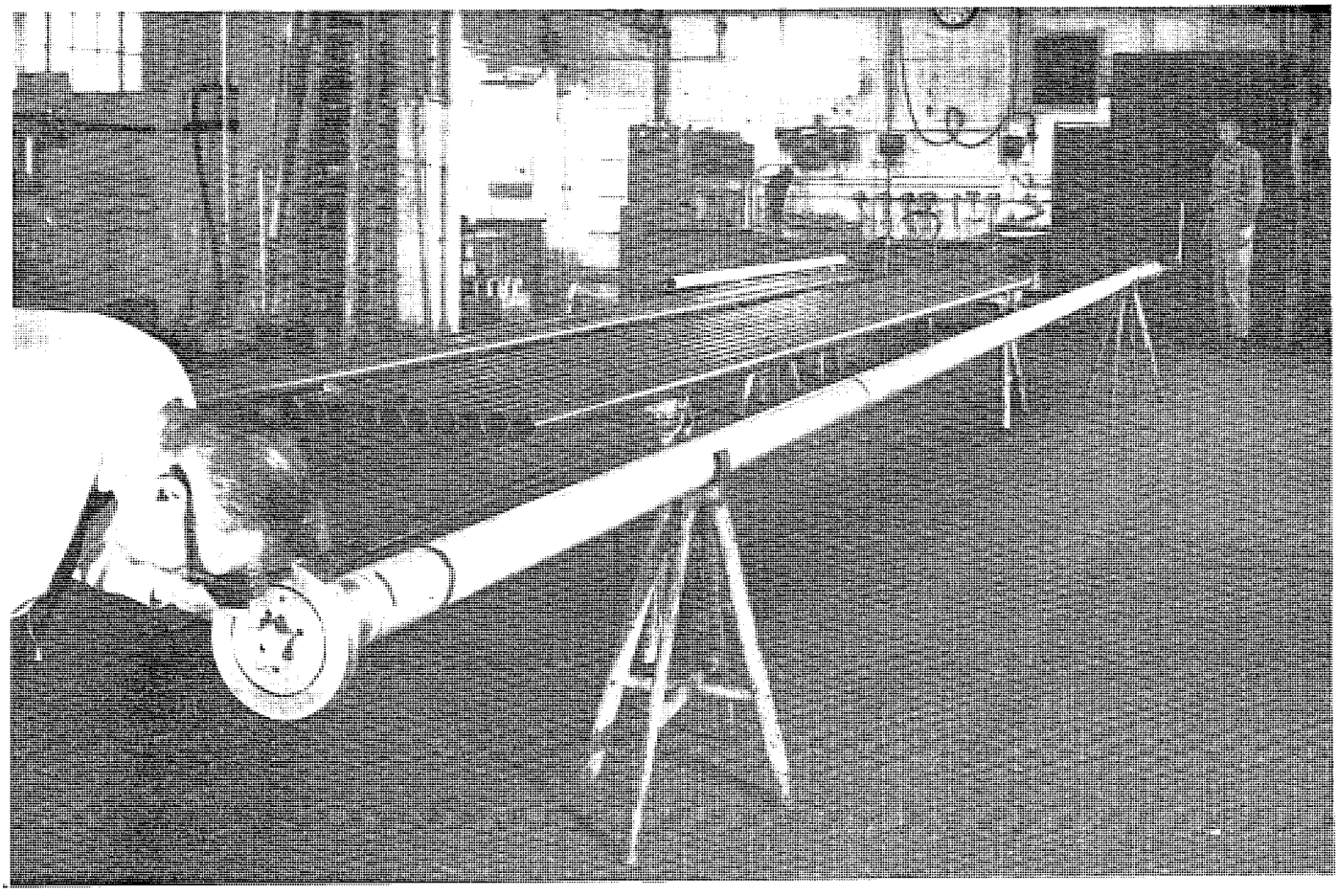

FIG. 10

and instruments in the derrick. In this method no marking of the thread joints is necessary since the degree of misalignment of reference mark on the multishot instrument with reference knife of the core shoe is read off the alignment instrument and correction is made in the final computation.

PERFORMANCE

The Christensen-Hügel method has yielded core recovery approaching 100% and in one particular case, recovery was considered far above average for the section. In the Texas test in question, fractured cherty formation was notorious for core jamming and the stabilizing effect on the core of the Hügel knives was credited with prevention of short length incomplete cores.

Survey instruments are usually reliable and with some instruction, field personnel found the required recordkeeping, timing and arithmetic orientation calculations simple. Coring service personnel turned over to company engineers or geologists the developed and numbered films, along with the core log, completed orientation calculations and the grooved cores. Some minor confusion has been noted when coring personnel attempted their first calculations (converting from quadrant to azimuth magnetic readings and including necessary corrections), but these details were ironed out with experience.

The near-conventional core barrels and diamond core bits have performed satisfactorily and no new problems are in evidence. One exception might be that it takes more lead-time for orientation services than for conventional coring, in order to allow about 2 to 10 days extra time for assembly of required parts at the job, as well as to arrange for availability of qualified personnel.

On one job the core orientation analysis indicated that the core had turned and grooves were missing in one broken section. The core was considered more than 90% correctly oriented, however, and despite turning or loss of marks at one or two stations per core, the bulk of the core can still be oriented correctly using the multiple station per core, multishot method.

The geological results and proprietary significance of the cores thus far oriented are of course not available to us. However, in one orienting job, it was learned that results in a competitor's offset hole drilled later confirmed

indications from the oriented core taken in the customer's well. On another location, it was learned that the oriented core results dictated a 90° change in the next planned stepout development well's location. As experience and data are gradually accumulated, producers themselves may later elect to publish general-interest results from oriented coring.

LIMITATIONS, PROBLEMS

No trials of the Christensen-Hügel process have been made to date for cores larger than 5-1/4" or smaller than 1-7/8". Due to mechanical limitations, we do not, at present, forsee oriented core below 1-7/8" diameter.

For Christensen-Hügel oriented cores, an obvious limitation is that incurred by loss of cores. For incompletely recovered cores, it may not be possible in all cases, but usually is possible, to tell from what section core has been lost. Without evidence of core washed away (an unconsolidated section for example), it is sometimes necessary to assume core is lost from the bottom. Stations, grooves, photographs, etc., are however useful for that core remaining. Depths will be off only by the amount of lost core we are not able to pinpoint as to its original depth location.

A possible source of inaccuracy in Christensen-Hügel orientation would be a fractured core rotating within the throat of the core bit, after it has been cut to required diameter by the bit ID gage stones, but before it enters the inner barrel. This distance is held to a minimum; on the 6-1/4" barrel, for example, the bottom of the knife is 1/2" from the top row of diamonds, and about 1-1/8" from the ID gage diamonds. All this core is, however, being pushed downward from above by the force necessary to groove the core. This force might be about 100 to 750 lbs., depending on the formation's strength and condition of the knives. It is difficult to imagine the core bit's diamonds being able to rotate (instead of simply cutting) this fractured section which is held down by the grooving forces from above.

Accuracy of directions is probably better than $\pm 3^{o}$. The inner barrel parts are all pre-aligned and connections marked for a prescribed make-up before going to a job. The core groove centers can be read within about 2° and survey instruments have proven accuracy of 0.25%, based on complete well bore surveys, locating the hole TD position.

Conventional photographic survey instruments with hot hole film are rated to 300° borehole temperature, and mechanical, non-photographic single-shoe survey instruments are rated to about 400° F. The bit, barrel, conventional integral seals and other mechanical equipment have a minimum temperature rating of about 600°F. With Monel cases, survey instruments are rated to 25,000 feet with 16 ppg mud. Film time is from 6 to 30 hours of pictures, depending on picture frequency, starting from the beginning of the trip into the hole.

CONCLUSION

Field performance in coring thousands of feet shows that reliably oriented cores can be obtained on a commercial basis with the Christensen-Hügel technique. The core in this system is continuously grooved by three special knives and orientation is obtained by correlation between the grooves and pictures from a multishot survey instrument rotationally fixed on the stationary inner barrel assembly.

Owing to the geological significance of oriented cores, these recent and current field developments give promise of expanding interest in orientation services and of helping geologists to improve their understanding of complex structural and stratigraphic conditions.

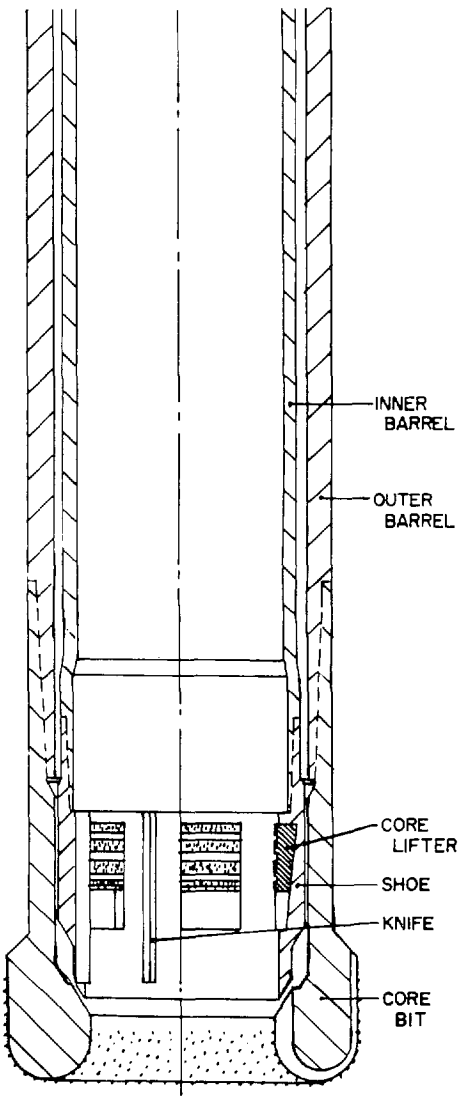

FIG. 11

BIT END OF CHRISTENSEN-HÜGEL ORIENTING BARREL

in the petroleum **WORLD** *Christensen is the difference with diamond bits and core barrels*

ALASKA
Anchorage ..... Phone 272-0224

ARIZONA
Tempe ..... Phone 967-3645

CALIFORNIA
Mercury Christensen Company
Bakersfield ..... Phone 323-1222
Los Angeles ..... Phone 633-1161
San Francisco ..... Phone 692-2537
Ventura ..... Phone 649-9204

COLORADO
Denver ..... Phone 744-1224
Grand Junction ..... Phone 242-1202

GEORGIA
Atlanta ..... Phone 873-6497

ILLINOIS
Carmi ..... Phone 382-2151
Bourbonnais ..... Phone 933-1051

INDIANA
Spencer ..... Phone 876-4794

KANSAS
Liberal ..... Phone 624-2121

LOUISIANA
Houma ..... Phone 879-2556
*Lafayette ..... Phone 235-5541
New Orleans ..... Phone 367-4481
Shreveport ..... Phone 424-8318

MICHIGAN
Jackson ..... Phone 784-4541
Marine City ..... Phone 762-7511

MISSISSIPPI
Laurel ..... Phone 428-4181

MISSOURI
Kansas City ..... Phone 931-9661

MONTANA
Billings ..... Phone 252-9655

NEBRASKA
Omaha ..... Phone 341-0187
Sidney ..... Phone 254-4251

NEW JERSEY
Gloucester ..... Phone 456-3434

NEW MEXICO
Farmington ..... Phone 325-1942
Hobbs ..... Phone 393-3118

NORTH DAKOTA
Williston ..... Phone 572-6942

OKLAHOMA
*Oklahoma City ..... Phone 677-4501

TEXAS
Corpus Christi ..... Phone 883-0241
Dallas ..... Phone 747-1404
Houston ..... Phone 453-0434
Midland ..... Phone 683-5454
Pampa ..... Phone 664-2632
Tyler ..... Phone 593-5078

UTAH
*Salt Lake City ..... Phone 484-5231
Vernal ..... Phone 789-3413

WASHINGTON
Spokane ..... Phone 926-8741

WYOMING
Casper ..... Phone 237-2543
Rock Springs ..... Phone 362-5712
Worland ..... Phone 347-2252

The world's largest manufacturer of diamond set products for the petroleum industry

ALGERIA
Christensen Diamond Products S.A. (Algerie)
63, Chemin Beaurepaire
El Biar, Algerie

***AUSTRALIA**
Christensen Diamond Products Australia Pty. Ltd.
34 Kinkaid Ave.
No. Plympton, Australia

***BRAZIL**
Christensen Diamond Products do Brazil S.A.
Caixa Postal 30.600
Rua Moreira de Godoy, 627-635
São Paulo, Brazil

***CANADA**
Christensen Diamond Products
Division of Hard Metals (Canada), Ltd.
14730 - 118 Ave.
Edmonton, Alberta, Canada

***CHILE**
Christensen Diamond Products de Chile C.A.
Casilla 1150-903 Calle Dolores
Santiago, Chile

***COSTA RICA**
Christensen Diamond Products de Centro America S.A.
Apartado Postal 5235
San José, Costa Rica
Centro America

***FRANCE**
Christensen Diamond Products Co. (France)
Place de la Gare
78 La Verriere
France

***WEST GERMANY**
Christensen Diamond Products G.m.b.H.
Postfach 309
3100 Celle 1, West Germany

***INDIA**
Christensen-Longyear (India) Ltd.
P. O. Box 278
Bombay, India

*Designates Manufacturing Plants

ITALY
Christensen Diamond Products Co. (Italia) S.P.A.
Corso di Francia No. 235
Rome, Italy

***JAPAN**
Nippon Christensen Diamond Products Co., Ltd.
#7-3 Chome Kojimachi
Chiyoda Ku, Tokyo, Japan

LEBANON
Guy Alexander
P. O. Box 4116
Beirut, Lebanon

LIBYA
c/o WESCO
Box 682
Tripoli, Libya

***MEXICO**
Christensen Diamond Products
de Mexico, S.A. de C.V.
Apartado 57, San Bartolo Naucalpan
Estado de Mexico, Mexico

***PERU**
Christensen Diamond Products del Peru, S.A.
Casilla 4091
Lima, Peru

***PHILIPPINES**
Christensen Diamond Products (Philippines) Inc.
P. O. Box 1588
Manila, Philippines

***SPAIN**
Christensen Diamond Products (Espana) S.A.
Antonita Jimenez 30
Madrid, 19, Spain

VENEZUELA
Christensen Diamond Products
de Venezuela, C.A.
Apartado 463, Maracaibo, Venezuela

EXPORT REPRESENTATIVE
R. J. Eiche & Associates, Inc.
Woolworth Bldg.
233 Broadway
New York City, New York 10007

wells drilled with diamonds cost less! CHRISTENSEN *Christensen is the difference*

SERVICE FROM WORLD-WIDE SALES OFFICES AND MANUFACTURING PLANTS MAIN OFFICE AND PLANT: 1937 SOUTH 2nd WEST, SALT LAKE CITY, UTAH 84110

AMERICAN SMELTING AND REFINING COMPANY
TUCSON ARIZONA

December 28, 1973

TO: W. L. Kurtz

FROM: H. L. Crittendon

Drilling -- General

I have some thoughts which I think may be helpful for future drilling projects and I thought I would pass them along.

Superior East

Holes No. A-3 and A-6 could probably have casing set more cheaply by a cable tool rig. Since 6-5/8" casing with a .188 wall will probably be set, the bit size passing through the casing will have to be 6.0" or less. If 5-7/8" sealed bearing carbide insert bits can be ordered in advance on special order, I believe that is the size that should be used. The 1/4" difference in annulus could very well mean the difference in being able to set the casing on bottom or not. An ideal rig to complete these two holes would be a Failing "DMX" capable of diamond drilling. The upper part could be drilled with mud or air and completed with diamond drilling equipment.

I believe the following methods are worth considering on future drilling of the Superior East Project.

1) Use of a new mud hammer....available from Dresser Industries or Cherokee Tool Co.

2) Use of aerated mud.

3) Use of new Mission 3-5/8"-4" hi-pressure air hammer to continue drilling through 4" ID casing.

4) Use of quick-set cements and gels for lost circulation and to stop water influx.

5) Packed-hole drill collars to help keep hole straight.

6) Use of specially designed rotating air head for small drill rigs.

7) The use of combination rotary-diamond rigs....Heath & Sherwood, Shaft Drillers, Inc., Boyles.

8) Use of twenty-foot core barrels in Whitetail Conglomerate.

9) Use of 6-5/8"-7" casing to case off the dacite. This method is advantageous in air or mud drilling. There are local severe lost circulation zones in the dacite; e.g., DCA-1, A-1, AH-2, AI-1, the hole Barnes drilled for Inspiration.

General

I believe the most obvious need for improvement in diamond drilling is in cementing procedures. Sophisticated equipment and materials are available from the petroleum industry and elsewhere, the problem is getting diamond drillers to use them. Normally, cementing and hole conditioning is at the expense of the mining company and there is not a great deal of incentive for improvement on the part of the diamond drillers.

Possibly some improvement could be made on combination rotary-diamond drilling rigs. Any sophisticated diamond drilling rig, however, runs the risk of being non-competitive with low overhead diamond drilling rigs such as Joys's 22HD. Some air-hammer work could be done with any diamond drill, however, and the 4" Mission hammer offers good possibilities for some cost reduction in the upper parts of the hole. As casing becomes more expensive, cementing techniques should be improved upon and used more.

Howard Crittendon

H. L. Crittendon

HLC:lb