CONTACT INFORMATION
Mining Records Curator
Arizona Geological Survey
416 W. Congress St., Suite 100
Tucson, Arizona 85701
602-771-1601
http://www.azgs.az.gov
inquiries@azgs.az.gov

The following file is part of the JABA, Inc. Tombstone Mining Records

ACCESS STATEMENT

These digitized collections are accessible for purposes of education and research. We have indicated what we know about copyright and rights of privacy, publicity, or trademark. Due to the nature of archival collections, we are not always able to identify this information. We are eager to hear from any rights owners, so that we may obtain accurate information. Upon request, we will remove material from public view while we address a rights issue.

CONSTRAINTS STATEMENT

The Arizona Geological Survey does not claim to control all rights for all materials in its collection. These rights include, but are not limited to: copyright, privacy rights, and cultural protection rights. The User hereby assumes all responsibility for obtaining any rights to use the material in excess of "fair use."

The Survey makes no intellectual property claims to the products created by individual authors in the manuscript collections, except when the author deeded those rights to the Survey or when those authors were employed by the State of Arizona and created intellectual products as a function of their official duties. The Survey does maintain property rights to the physical and digital representations of the works.

QUALITY STATEMENT

The Arizona Geological Survey is not responsible for the accuracy of the records, information, or opinions that may be contained in the files. The Survey collects, catalogs, and archives data on mineral properties regardless of its views of the veracity or accuracy of those data.

0145

INDEX

Record #175 [8:24:1-3] <letter>
Lindeman, John E. (12/28/83) Letter To: Lee, Robert G.
Cyanide Spill of November 7, 1983.
Arizona Department of Health Services, Tucson, AZ.

Record #176 [8:24:4-9] <water sample analysis>
Smith & Smith. (01/10/84)
Water Quality Analysis for samples DWW #1, TWW #1-2, LWW #1, CWW #2-3.
Smith & Smith Environmental Laboratory, Flagstaff, AZ.

Record #178 [8:24:12] <analysis quotation>
Amalfi, Rick. (01/23/84)
Laboratory Analysis Request and Fee Quotation.
Western Technologies Inc., Phoenix, AZ.

Record #177 [8:24:10-11] <letter>
Devereaux, Stephen B. (01/23/84) Letter To: Lee, Robert G.
Confirmation of discussions outlining sampling and monitoring program.
Arizona Department of Health Services, Tucson, AZ.

Record #179 [8:24:13] <letter>
Lindroos, Gary A. (01/30/84) Letter To: Rendes, Andrew M.
Implementation of water sampling program.
Tombstone Exploration, Inc., Tombstone, AZ.

Record #180 [8:24:14-16] <water & sediment assays>
Amalfi, Frederick A. (03/22/84)
Water and Sediment Analysis.
Western Technologies Inc., Phoenix, AZ.

Record #181 [8:24:17-19] <water analysis>
Amalfi, Frederick A. (03/22/84)
Water Analysis.
Western Technologies Inc., Phoenix, AZ.

Record #182 [8:24:20-23] <cyanide analysis>
Amalfi, Frederick A. (04/23/84)
Cyanide Analysis.
Western Technologies Inc., Phoenix, AZ.

Record #183 [8:24:24] <memo>
Lindroos, Gary A. (05/24/84) Letter To: Schloss, Thomas.
Cyanide Spill.
Tombstone Exploration, Inc., Tombstone, AZ.

Record #215 [8:24:125] <water analysis>
Atkinson, Beth. (06/29/84)
Inorganic Chemical Analysis Reporting Form.
Western Technologies Inc., Phoenix, AZ.

Record #184 [8:24:25] <cover letter>
Lindroos, Gary A. (07/02/84) Letter To: Doughty, Allen.
Enclosure of water well and sediment samples for analysis.
Tombstone Exploration, Inc., Tombstone, AZ.

Record #216 [8:24:126-127] <weekly report letter>
Lee, Bob G. (07/24/84) Letter To: Martin, Eddie.
Report on TEI, Inc. well water samples for the week of July 16-22, 1984.
Tombstone Exploration, Inc., Tombstone, AZ.

Record #185 [8:24:26] <cover letter>
Lindroos, Gary A. (07/27/84) Letter To: Western Technology.
Enclosure of water well samples for analysis.
Tombstone Exploration, Inc., Tombstone, AZ.

Record #186 [8:24:27] <cover letter>
Lindroos, Gary A. (07/31/84) Letter To: Western Technology.
Enclosure of water well samples for analysis.
Tombstone Exploration, Inc., Tombstone, AZ.

Record #217 [8:24:128] <weekly report letter>
Lee, Bob G. (08/01/84) Letter To: Martin, Eddie.
Report on TEI, Inc. well water samples for the week of July 23-31, 1984.
Tombstone Exploration, Inc., Tombstone, AZ.

Record #219 [8:24:130] <weekly report letter>
Lee, Bob G. (08/31/84) Letter To: Martin, Eddie.
Report on TEI, Inc. well water samples for the week of August 25-31, 1984.
Tombstone Exploration, Inc., Tombstone, AZ.

Record #220 [8:24:131] <weekly report letter>
Lee, Bob G. (09/10/84) Letter To: Martin, Eddie.
Report on TEI, Inc. well water samples for the week of September 1-7, 1984.
Tombstone Exploration, Inc., Tombstone, AZ.

Record #221 [8:24:132] <weekly report letter>
Lee, Bob G. (09/17/84) Letter To: Martin, Eddie.
Report on TEI, Inc. well water samples for the week of September 8-14, 1984.
Tombstone Exploration, Inc., Tombstone, AZ.

Record #222 [8:24:133] <weekly report letter>
Lee, Bob G. (09/21/84) Letter To: Martin, Eddie.
Report on TEI, Inc. well water samples for the week of September 15-21, 1984.
Tombstone Exploration, Inc., Tombstone, AZ.

Record #223 [8:24:134] <weekly report letter>
Lee, Bob G. (09/28/84) Letter To: Martin, Eddie.
Report on TEI, Inc. well water samples for the week of September 22-28, 1984.
Tombstone Exploration, Inc., Tombstone, AZ.

Record #224 [8:24:135] <weekly report letter>
Lee, Bob G. (10/05/84) Letter To: Martin, Eddie.
Report on TEI, Inc. well water samples for the week of September 29 to October 5, 1984.
Tombstone Exploration, Inc., Tombstone, AZ.

Record #225 [8:24:136-137] <water analysis>
Hoppe, Steven P. (10/17/84)
Laboratory Report - Water Sample Analysis.
Western Technologies Inc., Phoenix, AZ.

Record #226 [8:24:138] <weekly report letter>
Lee, Bob G. (10/19/84) Letter To: Martin, Eddie.
Report on TEI, Inc. well water samples for the week of October 14-19, 1984.
Tombstone Exploration, Inc., Tombstone, AZ.

Record #227 [8:24:139] <weekly report letter>
Lee, Bob G. (10/29/84) Letter To: Martin, Eddie.
Report on TEI, Inc. well water samples for the week of October 20-26, 1984.
Tombstone Exploration, Inc., Tombstone, AZ.

Record #228 [8:24:140] <weekly report letter>
Lee, Bob G. (11/09/84) Letter To: Martin, Eddie.
Report on TEI, Inc. well water samples for the week of November 3-9, 1984.
Tombstone Exploration, Inc., Tombstone, AZ.

Record #187 [8:24:28-29] <letter>
Traywick, Ben T. and Gradillas, Alex. (03/28/86) Letter To: Cochise Co. Health Dept.
The many headed Hydra monster "cyanide contamination" has reared its head.
Office of the Mayor, City of Tombstone, AZ.

Record #190 [8:24:35] <cover letter>
Columbus, Wm. L. (06/02/86) Letter To: Escapule, Dustin.
Enclosure of two "Applications for Installation Permit" forms.
Arizona Department of Health Services, Tucson, AZ.

Record #188 [8:24:30-31] <letter>
Kennett, Roger. (06/02/86) Letter To: Magini, Frank.
Contention Mine; Cochise Silver Mines, Site Inspection.
Arizona Department of Health Services, Phoenix, AZ.

Record #189 [8:24:32-34] <site inspection report>
Kennett, Roger. (06/02/86)
Report of Site Inspection, Contention Mine (Tombstone); Cochise Silver Mines.
Arizona Department of Health Services, Phoenix, AZ.

Record #191 [8:24:36] <letter>
Magini, Frank. (06/03/86) Letter To: Kennett, Roger.
Response to your letter dated June 2, 1986. [Draft}
Cochise Silver Mines, Phoenix, AZ.

Record #192 [8:24:37] <memo>
Lind, Audrey M. (01/27/87) Letter To: Magini Contracting.
Cost to analyze water samples and required payment.
Arizona Testing Laboratories, Phoenix, AZ.

Record #193 [8:24:38] <cover letter>
Lindroos, Gary A. (02/02/87) Letter To: Arizona Testing Lab.
Enclosure of well samples and "Self-Monitoring Form".
Cochise Silver Mines, Tombstone, AZ.

Record #229 [8:24:141-144] <self-monitoring report>
Drake, Robert J. (02/18/87)
Groundwater Quality Protection Permit Self-Monitoring Report Forms - Well and Tap Water.
Arizona Testing Laboratories, Phoenix, AZ.

Record #194 [8:24:39] <letter>
Kennett, Roger. (03/12/87) Letter To: Lindroos, Gary A.
Cochise Silver Mines, Inc., Groundwater Quality Protection Permit No. G-0011-02.
Arizona Department of Health Services, Phoenix, AZ.

Record #230 [8:24:145-148] <self-monitoring report>
Drake, Robert J. (04/06/87)
Groundwater Quality Protection Permit Self-Monitoring Report Forms - Well and Tap Water.
Arizona Testing Laboratories, Phoenix, AZ.

Record #195 [8:24:40] <cover letter>
Zimmerman, Jeffrey C. (05/06/87) Letter To: Harper, Raymond.
Enclosed Environmental Law Letter.
Meyer, Hendricks, Victor, Osborn & Maledon, Phoenix, AZ.

Record #196 [8:24:41-52] <letter>
Zimmerman, Jeffrey C. (05/06/87) Letter To: Harper, Raymond.
Arizona Environmental Quality Act.
Meyer, Hendricks, Victor, Osborn & Maledon, Phoenix, AZ.

Record #231 [8:24:149] <chain of custody>
Lindroos, Gary A. (05/15/87)
Chain of Custody - Water Samples.
Cochise Silver Mines, Inc., Tombstone, AZ.

Record #240 [8:24:166] <cyanide analyses>
Drake, Robert J. (05/18/87)
Report of Laboratory Tests - Cyanide Sludge Cake.
Arizona Testing Laboratories, Phoenix, AZ.

Record #241 [8:24:167] <cyanide analyses>
Drake, Robert J. (05/19/87)
Report of Laboratory Tests - Soil.
Arizona Testing Laboratories, Phoenix, AZ.

Record #232 [8:24:150-153] <self-monitoring report>
Hoppe, Steven P. (05/22/87)
Groundwater Quality Protection Permit Self-Monitoring Report Forms - Well and Tap Water.
Arizona Testing Laboratories, Phoenix, AZ.

Record #242 [8:24:168-169] <cyanide analyses>
Smith, Kathryn W. (06/12/87)
Laboratory analysis of solid impound samples.
Smith & Smith Environmental Consultants, Sierra Vista, AZ.

Record #243 [8:24:170] <cyanide analyses>
Smith, Kathryn W. (06/18/87)
Laboratory analysis of pregnant solution.
Smith & Smith Environmental Consultants, Sierra Vista, AZ.

Record #244 [8:24:171] <cyanide analyses>
Smith, Kathryn W. (06/18/87)
Laboratory analysis of solid impound samples.
Smith & Smith Environmental Consultants, Sierra Vista, AZ.

Record #198 [8:24:55-60] <meeting notes>
Unknown Author. (06/24/87)
Notes from State Meeting 6/24/87.
Cochise Silver Mines, Phoenix, AZ.

Record #197 [8:24:53-54] <memo>
Lindroos, Gary A. (06/24/87) Letter To: Escapule, Dustin.
ADHS Inspection (Inspectors: Mr. Andrew Rendes, Mr. John Best).
Cochise Silver Mines, Tombstone, AZ.

Record #233 [8:24:154-156] <self-monitoring report>
Lindroos, Gary A. (06/30/87)
Groundwater Quality Protection Permit Self-Monitoring Report Forms -
Field Summary for April, May & June 1987.
Cochise Silver Mines, Inc., Tombstone, AZ.

Record #199 [8:24:61] <impoundment pad map>
Graves, A. J. (07/01/87)
Waste Containment Facilities.
Cochise Silver Mines, Phoenix, AZ, scale: 1 inch = 30 ft.

Record #200 [8:24:62] <memo>
Rendes, Andrew M. (07/01/87) Letter To: Maston, James A.
Site Visit to Cochise Silver Mines, Inc., Tombstone, Arizona.
Arizona Department of Environmental Quality, Phoenix, AZ.

Record #201 [8:24:63] <memo>
Lindroos, Gary A. (07/22/87) Letter To: Escapule, Dustin.
Inspection and Sampling by ADHS.
Cochise Silver Mines, Tombstone, AZ.

Record #234 [8:24:157] <cover letter>
Lindroos, Gary A. (07/24/87) Letter To: Arizona Testing Lab.
Enclosure of well and tap water samples for analysis.
Cochise Silver Mines, Tombstone, AZ.

Record #237 [8:24:160-163] <self-monitoring report>
Smith & Smith. (07/29/87)
Groundwater Quality Protection Permit Self-Monitoring Report Forms - Well and Tap Water.
Smith & Smith Environmental Consultants, Sierra Vista, AZ.

Record #235 [8:24:158] <water analysis>
Drake, Robert J. (07/29/87)
Report of Laboratory Tests - Water Sample Analysis.
Arizona Testing Laboratories, Phoenix, AZ.

Record #238 [8:24:164] <water analysis>
Drake, Robert J. (07/29/87)
Report of Laboratory Tests - Water Sample Analysis.
Arizona Testing Laboratories, Phoenix, AZ.

Record #236 [8:24:159-164] <letter>
Lindroos, Gary A. (08/05/87) Letter To: Curlett, James E.
Reference to your letter of July 23, 1987 - resampling of wells and tap water.
Cochise Silver Mines, Inc., Tombstone, AZ.

Record #202 [8:24:64-65] <letter>
Kennett, Roger. (08/18/87) Letter To: Escapule, Dustin.
Cochise Silver Mines, Inc., Groundwater Quality Protection Permit No. G-0011-02.
Arizona Department of Environmental Quality, Phoenix, AZ.

Record #203 [8:24:66] <letter>
Lindroos, Gary A. (08/18/87) Letter To: Curlett, James E.
Request for approval to remove washed tailings to Houghton Pad.
Cochise Silver Mines, Inc., Tombstone, AZ.

Record #239 [8:24:165] <water analyses>
Smith & Smith. (08/19/87)
Laboratory Results of TEI well water 8/6-19/87.
Smith & Smith Environmental Consultants, Sierra Vista, AZ.

Record #204 [8:24:67-69] <letter>
Magini, Frank. (10/30/87) Letter To: PBR Minerals Board.
Irregularities at the Tombstone mine site.
Cochise Silver Mines, Phoenix, AZ.

Record #206 [8:24:71] <memo>
Ashworth, J. Michael. (04/27/88) Letter To: All Employees.
Temporary Plant Closure.
PBR Minerals, Inc., Phoenix, AZ.

Record #205 [8:24:70] <press release>
Ashworth, J. Michael. (04/27/88)
Press Release - PBR Minerals to begin final testing and closure of cleanup operation.
PBR Minerals, Inc., Phoenix, AZ.

Record #207 [8:24:72] <letter>
Vineyard, William L. (05/01/88) Letter To: PBR Minerals.
Proposed Leach Operation.
Arizona Department of Environmental Quality, Phoenix, AZ.

Record #208 [8:24:73] <memo>
Ashworth, J. Michael. (05/17/88) Letter To: All Suppliers.
Accounts Payable.
PBR Minerals, Inc., Phoenix, AZ.

Record #209 [8:24:74-106] <letter>
Rouse, Jim V. (06/08/88) Letter To: Ashworth, Mike.
Enclosure of items for your review and input.
Geochemical Engineering Inc., Lakewood, CO.

Record #210 [8:24:107-114] <letter>
Escapule, Dustin L. (06/13/88) Letter To: Rouse, Jim V.
Enclosure of filled out "Notice of Disposal" application.
PBR Minerals, Inc., Tombstone, AZ.

Record #212 [8:24:116] <letter>
Ashworth, J. Michael. (06/14/88) Letter To: All Suppliers.
Trade Payables.
PBR Minerals, Inc., Tombstone, AZ.

Record #211 [8:24:115] <letter>
Smith, Kathryn W. (06/14/88) Letter To: Lindroos, Gary A.
Contaminated sample (TEI well #3) in 1987.
Smith & Smith Environmental Consultants, Sierra Vista, AZ.

Record #245 [8:24:172-196] <geochemical report>
Unknown Author. (06/15/88)
Geochemical Evaluation of Clay-Subliner Material. [Draft]
Geochemical Engineering Inc., Lakewood, CO.

Record #213 [8:24:117-123] <notice of disposal>
Lindroos, Gary A. (07/13/88)
Notice of Disposal - Grand Central Leaching Facility.
PBR Minerals, Inc., Tombstone, AZ.

Record #246 [8:24:197-223] <geochemical report>
Unknown Author. (08/03/88)
Geochemical Evaluation of Clay-Subliner Material.
Geochemical Engineering Inc., Lakewood, CO.

Record #218 [8:24:129] <water analyses>
Lindroos, Gary A. (08/10/88)
Daily analyses of TEI, Inc. well water samples for 8/1-10/84.
Tombstone Exploration, Inc., Tombstone, AZ.

Record #247 [8:24:224-290] <quality control plan>
Unknown Author. (09/01/88)
Quality Control Plan for Clay Subliner Placement - Grand Central Leaching Facility.
Geochemical Engineering Inc., Lakewood, CO.

Record #214 [8:24:124] <memo>
Ashworth, J. Michael. (04/24/89)
Suspension of tailing leach operation.
PBR Minerals, Inc., Tombstone, AZ.

Cyanide Spill (11/7/83)

ARIZONA DEPARTMENT OF HEALTH SERVICES

BRUCE BABBITT, Governor
DONALD B. MATHIS, Director

Division of Environmental Health Services
Bureau of Water Quality Control
402 West Congress Room 214
Tucson, Arizona 85701
Telephone: 628-5321

December 28, 1983

Mr. Robert G. Lee, General Manager
Tombstone Exploration, Inc.
P.O. Box 610
Tombstone, AZ 85638

Dear Mr. Lee:

Re: Cyanide Spill of November 7, 1983

I am writing to follow-up a verbal request from Mr. Ed Swanson of ADHS to Tombstone Exploration, Inc. concerning monitoring and sampling as a result of the cyanide spill in Tombstone on November 7, 1983.

Mr. Andrew Rendes of my staff and I wish to thank you for your past cooperation and concern for the situation. We feel certain that you will not feel our requests for monitoring and sampling to be unreasonable or unjustified. Mr. Rendes of this office will work with you and assist you with whatever problems you may encounter.

According to information I received from Mr. Swanson, his requests are:

*Tombstone Exploration, Inc. design and implement a water well sampling program. Basic water chemistry plus cyanide should be tested for, but trace metals can be omitted. For clarification, basic water chemistry includes, calcium, magnesium, sodium, phenolphthalein alkalinity, total alkalinity, chloride, nitrate, sulphate, total phosphates, fluorides, hardness, and potassium.

*Design and implement a surface water and sediment sampling program for cyanide to confirm the thoroughness of the cleanup operation.

*Perform a comprehensive analysis of the rinse pond water and sediment, including cyanide and trace metals. This should include in-stream and off-stream (for control) sediments from above the operation to a downstream point on the main highway (U.S. 80) in the Northwest corner of Tombstone.

The Department of Health Services is An Equal Opportunity Affirmative Action Employer. All qualified men and women, including the handicapped, are encouraged to participate.

State Health Building 1740 West Adams Street Phoenix, Arizona 85007

*Inform the Bureau of Water Quality Control if other potentially dangerous chemicals are/were used in the mining process. If there appears to be a possibility that these chemicals were released during the spill, they should also be sampled for in the previously mentioned locations.

As I stated earlier, this office is desirous of working with T.E.I. in the aftermath of the accident to ascertain the safety of the drinking water of the town and to allay the fears of the residents. T.E.I. may already have performed or partially performed one or more of the requests. The sooner your firm designs the monitoring plans and reviews them with Mr. Rendes, the better for all parties involved. If you should need any assistance or are ready to review your monitoring and sampling scheme, contact Mr. Rendes at 628-5321.

We again thank you for your past cooperation, and look forward to working with you and hearing from you within ten working days from receipt of this letter.

Sincerely,

J. E. Lindeman

John E. Lindeman, P.E., Manager
Southern Regional Office
Environmental Health Services

JEL:AMR:ps

cc: Cochise County Health Department
Ed Swanson, BWQC
Tombstone City Clerk

Certificate of Analysis

CERTIFICATE NO.

PROJECT NO.

DATE 12/27/83

MSRD
Mountain States Research & Development

MSRD NO.	SAMPLE IDENTIFICATION			Free CN^- Mg/L	Total CN^- Mg/L				
20798	Sol'n Sample #1			0.29	0.81				
20799	2			0.23	0.68				
20800	3			0.15	0.54				
20801	4			0.15	0.59				
20802	5			0.09	0.43				

STATEMENT OF CHARGES. INVOICE WILL FOLLOW.

000003

6	Free CN^-	@ $ 6.00 :	$ 36.00
6	Total CN^-	@ $ 30.00 :	$ 180.00
		@ $:	$
		@ $:	$

		@ $:	$
		@ $:	$
		@ $:	$
		@ $:	$

Total Charges $ 216.00

ND (None Detected)

REGISTERED ANALYTICAL CHEMIST
JAMES W. ANDERSON

Smith & Smith
ENVIRONMENTAL LABORATORY
429 SOUTH SAN FRANCISCO
FLAGSTAFF, ARIZONA 86001
(602) 779-4291

00034

WATER QUALITY ANALYSIS - CHEMICAL

Specimen Number: IS 602

Date Received: 01/05/84

Time: 1300

NAME OF CLIENT: T E I

ADDRESS: Box 610

CITY	STATE	ZIP CODE	COUNTY
Tombstone	AZ	85638	Cochise

MAILING ADDRESS OF REPORT: SAME

ADDRESS:

CITY	STATE	ZIP CODE

SYSTEM OR SOURCE NAME: T E I

LOCATION OF SAMPLING POINT: DWW # 1

COLLECTED BY: T E I

DATE COLLECTED: 01/04/84

HOUR:

PRESERVATIVE ADDED? YES x NO

SPECIMAN UNSATISFACTORY

Reason:

CODE

SOURCE TYPE
- Well
- Sewage
- Seepage
- Surface
- Industrial

SOURCE DATA
- Treated
- x Untreated
- x Grab Sample
- Composite Sample

SAMPLER'S COMMENTS

ROUTINE WATER CHEMISTRY

Electrical Conductivity, µmhos/cm

pH

CATIONS	ME/L	Mg/L
Calcium		
Magnesium		
Sodium		
Iron		
Copper		
Manganese		
Zinc		
Potassium		
TOTAL CATIONS		
ANIONS		
Alk P (CaCO3)		
Alk MO (CaCO3)		
Chloride		
Nitrate		
Sulfate		
Phosphate		
Fluoride		
Nitrite		
Sulfide		
Silica		
TOTAL ANIONS		

		Mg/L
Solids		
Residue		
Total Dissolved Solids (Calc.)		
Hardness (CaCO3)		
Total Alkalinity as (CaCO3)		
Total Soluble Salts (EC)		
V.S.S.		
Foaming Agents (MBAS)		
B.O.D.		
C.O.D.		
Kjeldahl Nitrogen Total		
Other		
Dissolved Oxygen (DO)		
x	Cyanide	0.02

TRACE METALS	Mg/L
Arsenic	
Silver	
Chromium	
Cadmium	
Lead	
Selenium	
Mercury	
Barium	
Chromium Hexavalent	
SPECIAL	
Boron	
Oil and Grease	
C.C.E.	
Phenols	
Pesticides	
PHYSICAL	
Color	
Taste	
Odor	
Turbidity	

000004

COMMENTS

ANALYST: KLH

DATE REPORTED: 01/10/84

Smith & Smith
ENVIRONMENTAL LABORATORY
425 SOUTH SAN FRANCISCO
FLAGSTAFF, ARIZONA 86001
(602) 779-4291

00034

WATER QUALITY ANALYSIS - CHEMICAL

Specimen Number IS 603

Date Received 01/05/84

Time 1300

NAME OF CLIENT: T E I

ADDRESS: Box 610

CITY	STATE	ZIP CODE	COUNTY
Tombstone	AZ	85638	Cochise

MAILING ADDRESS OF REPORT: SAME

ADDRESS:

CITY	STATE	ZIP CODE

SYSTEM OR SOURCE NAME: T E I

LOCATION OF SAMPLING POINT: TWW 2

COLLECTED BY: T E I

DATE COLLECTED: 01/04/84 HOUR:

PRESERVATIVE ADDED? YES x NO

SPECIMAN UNSATISFACTORY

Reason: CODE

SOURCE TYPE
Well Sewage Seepage
Surface Industrial

SOURCE DATA
Treated
x Untreated
x Grab Sample
Composite Sample

SAMPLER'S COMMENTS

ROUTINE WATER CHEMISTRY

Electrical Conductivity umhos/cm

pH

CATIONS	MEQ	Mg/L
Calcium		
Magnesium		
Sodium		
Iron		
Copper		
Manganese		
Zinc		
Potassium		
TOTAL CATIONS		
ANIONS		
Alk P (CaCO3)		
Alk MO (CaCO3)		
Chloride		
Nitrate		
Sulfate		
Phosphate		
Fluoride		
Nitrite		
Sulfide		
Silica		
TOTAL ANIONS		

		Mg/L
Solids		
Residue		
Total Dissolved Solids (Calc.)		
Hardness (CaCO3)		
Total Alkalinity as (CaCO3)		
Total Soluble Salts (EC)		
V.S.S.		
Foaming Agents (MBAS)		
B.O.D.		
C.O.D.		
Kjeldahl Nitrogen Total		
Other		
Dissolved Oxygen (DO)		
x Cyanide		10.9

TRACE METALS	Mg/L
Arsenic	
Silver	
Chromium	
Cadmium	
Lead	
Selenium	
Mercury	
Barium	
Chromium Hexavalent	
SPECIAL	
Boron	
Oil and Grease	
C.C.E	
Phenols	
Pesticides	
PHYSICAL	
Color	
Taste	
Odor	
Turbidity	

000005

COMMENTS

ANALYST KLH KW

DATE REPORTED 01/10/84

Smith & Smith
ENVIRONMENTAL LABORATORY
429 SOUTH SAN FRANCISCO
FLAGSTAFF, ARIZONA 86001
(602) 779-4291

00034

WATER QUALITY ANALYSIS - CHEMICAL

Speciman Number IS 604

Date Received 01/05/84

Time 1300

NAME OF CLIENT: T E I

ADDRESS: Box 610

CITY: Tombstone | STATE: AZ | ZIP CODE: 85638 | COUNTY: Cochise

MAILING ADDRESS OF REPORT: SAME

ADDRESS:

CITY: | STATE: | ZIP CODE:

SYSTEM OR SOURCE NAME: T E I

LOCATION OF SAMPLING POINT: TWW #1

COLLECTED BY: T E I

DATE COLLECTED: 01/04/84 | HOUR:

RESERVATIVE ADDED? YES | x NO

SPECIMAN UNSATISFACTORY

Reason: | CODE

SOURCE TYPE
Well | Sewage | Seepage
Surface | Industrial

SOURCE DATA
Treated
x Untreated
x Grab Sample
Composite Sample

SAMPLER'S COMMENTS

ROUTINE WATER CHEMISTRY

Electrical Conductivity, micromhos/cm

pH

CATIONS	ME/L	Mg/L
Calcium		
Magnesium		
Sodium		
Iron		
Copper		
Manganese		
Zinc		
Potassium		
TOTAL CATIONS		
ANIONS		
Alk P (CaCO3)		
Alk MO (CaCO3)		
Chloride		
Nitrate		
Sulfate		
Phosphate		
Fluoride		
Nitrite		
Sulfide		
Silica		
TOTAL ANIONS		

		Mg/L
☐	Solids	
☐	Residue	
☐	Total Dissolved Solids (Calc.)	
☐	Hardness (CaCO3)	
☐	Total Alkalinity as (CaCO3)	
☐	Total Soluble Salts (EC)	
☐	V.S.S.	
☐	Foaming Agents (MBAS)	
☐	B.O.D.	
☐	C.O.D.	
☐	Kjeldahl Nitrogen Total	
☐	Other	
☐	Dissolved Oxygen (DO)	
☐		
x	Cyanide	0.02
☐		
☐		
☐		
☐		
☐		
☐		
☐		
☐		

	TRACE METALS	Mg/L
☐	Arsenic	
☐	Silver	
☐	Chromium	
☐	Cadmium	
☐	Lead	
☐	Selenium	
☐	Mercury	
☐	Barium	
☐	Chromium Hexavalent	
☐	SPECIAL	
☐	Boron	
☐	Oil and Grease	
☐	C.C.E.	
☐	Phenols	
☐	Pesticides	
☐	PHYSICAL	
☐	Color	
☐	Taste	
☐	Odor	
☐	Turbidity	
☐		
☐		
☐		
☐		

000006

COMMENTS

ANALYST KLH KJW

DATE REPORTED 01/10/84

Smith & Smith
ENVIRONMENTAL LABORATORY
429 SOUTH SAN FRANCISCO
FLAGSTAFF, ARIZONA 86001
(602) 779-4291

00034

WATER QUALITY ANALYSIS - CHEMICAL

Specimen Number: IS 605
Date Received: 01/05/84
Time: 1300

NAME OF CLIENT: T E I
ADDRESS: Box 610
CITY: Tombstone | STATE: AZ | ZIP CODE: 85638 | COUNTY: Cochise
MAILING ADDRESS OF REPORT: SAME
ADDRESS:
CITY: | STATE: | ZIP CODE:
SYSTEM OR SOURCE NAME: T E I
LOCATION OF SAMPLING POINT: L W W # 1
COLLECTED BY: T E I
DATE COLLECTED: 01/04/84 | HOUR:
PRESERVATIVE ADDED? YES x NO

SPECIMAN UNSATISFACTORY
Reason: | CODE:

SOURCE TYPE
Well | Sewage | Seepage
Surface | Industrial

SOURCE DATA
Treated
x Untreated
x Grab Sample
Composite Sample

SAMPLER'S COMMENTS

ROUTINE WATER CHEMISTRY
Electrical Conductivity, µmhos/cm
pH

CATIONS	ME/L	Mg/L
Calcium		
Magnesium		
Sodium		
Iron		
Copper		
Manganese		
Zinc		
Potassium		
TOTAL CATIONS		
ANIONS		
Alk P (CaCO3)		
Alk MO (CaCO3)		
Chloride		
Nitrate		
Sulfate		
Phosphate		
Fluoride		
Nitrite		
Sulfide		
Silica		
TOTAL ANIONS		

	Mg/L
Solids	
Residue	
Total Dissolved Solids (Calc.)	
Hardness (CaCO3)	
Total Alkalinity as (CaCO3)	
Total Soluble Salts (EC)	
V.S.S.	
Foaming Agents (MBAS)	
B.O.D	
C.O.D.	
Kjeldahl Nitrogen Total	
Other	
Dissolved Oxygen (DO)	
x Cyanide	0.03

TRACE METALS	Mg/L
Arsenic	
Silver	
Chromium	
Cadmium	
Lead	
Selenium	
Mercury	
Barium	
Chromium Hexavalent	
SPECIAL	
Boron	
Oil and Grease	
C.C.E.	
Phenols	
Pesticides	
PHYSICAL	
Color	
Taste	
Odor	
Turbidity	

000007

COMMENTS

ANALYST: KLH RJS | DATE REPORTED: 01/10/84

Smith & Smith
ENVIRONMENTAL LABORATORY
429 SOUTH SAN FRANCISCO
FLAGSTAFF, ARIZONA 86001
(602) 779-4291

00034

WATER QUALITY ANALYSIS - CHEMICAL

Specimen Number IS 606

Date Received 01/05/84

Time 1300

NAME OF CLIENT: T E I

ADDRESS: Box 610

CITY	STATE	ZIP CODE	COUNTY
Tombstone	AZ	85638	Cochise

MAILING ADDRESS OF REPORT: SAME

ADDRESS

CITY	STATE	ZIP CODE

SYSTEM OR SOURCE NAME: T E I

LOCATION OF SAMPLING POINT: CWW #2

COLLECTED BY: T E I

DATE COLLECTED: 01/04/84 HOUR

PRESERVATIVE ADDED: YES x NO

SPECIMAN UNSATISFACTORY

Reason:

CODE

SOURCE TYPE
Well Sewage Stream
Surface Industrial

SOURCE DATA
Treated
x Untreated
x Grab Sample
Composite Sample

SAMPLER'S COMMENTS

ROUTINE WATER CHEMISTRY

Electrical Conductivity, µmhos/cm

pH

CATIONS	ME/L	Mg/L
Calcium		
Magnesium		
Sodium		
Iron		
Copper		
Manganese		
Zinc		
Potassium		
TOTAL CATIONS		
ANIONS		
Alk P (CaCO3)		
Alk MO (CaCO3)		
Chloride		
Nitrate		
Sulfate		
Phosphate		
Fluoride		
Nitrite		
Sulfide		
Silica		
TOTAL ANIONS		

		Mg/L
☐	Solids	
☐	Residue	
☐	Total Dissolved Solids (Calc.)	
☐	Hardness (CaCO3)	
☐	Total Alkalinity as (CaCO3)	
☐	Total Soluble Salts (EC)	
☐	V.S.S.	
☐	Foaming Agents (MBAS)	
☐	B.O.D.	
☐	C.O.D.	
☐	Kjeldahl Nitrogen Total	
☐	Other	
☐	Dissolved Oxygen (DO)	
☐		
x	Cyanide	0.03
☐		
☐		
☐		
☐		
☐		
☐		
☐		

TRACE METALS	Mg/L
Arsenic	
Silver	
Chromium	
Cadmium	
☐ Lead	
☐ Selenium	
☐ Mercury	
☐ Barium	
☐ Chromium Hexavalent	
☐ SPECIAL	
☐ Boron	
☐ Oil and Grease	
☐ C.C.E.	
☐ Phenols	
☐ Pesticides	
☐ PHYSICAL	
☐ Color	
☐ Taste	
☐ Odor	
☐ Turbidity	
☐	
☐	
☐	
☐	

000008

COMMENTS

ANALYST KLH KLH

DATE REPORTED 01/10/84

Smith & Smith
ENVIRONMENTAL LABORATORY
429 SOUTH SAN FRANCISCO
FLAGSTAFF, ARIZONA 86001
(602) 779-4291

00034

WATER QUALITY ANALYSIS - CHEMICAL

Specimen Number IS 607

Date Received 01/05/84

Time 1300

NAME OF CLIENT: T E I

ADDRESS: Box 610

CITY	STATE	ZIP CODE	COUNTY
Tombstone	AZ	85638	Cochise

MAILING ADDRESS OF REPORT: SAME

ADDRESS:

CITY	STATE	ZIP CODE

SYSTEM OR SOURCE NAME: T E I

LOCATION OF SAMPLING POINT: CWW #3

COLLECTED BY: T E I

DATE COLLECTED	HOUR
01/04/84	

PRESERVATIVE ADDED? YES X NO

SPECIMAN UNSATISFACTORY

Reason:

CODE

SOURCE TYPE
Well Sewage Seepage
Surface Industrial

SOURCE DATA
Treated
X Untreated
X Grab Sample
Composite Sample

SAMPLER'S COMMENTS:

ROUTINE WATER CHEMISTRY

Electrical Conductivity, µmhos/cm

pH

CATIONS	ME/L	Mg/L
Calcium		
Magnesium		
Sodium		
Iron		
Copper		
Manganese		
Zinc		
Potassium		
TOTAL CATIONS		
ANIONS		
Alk P (CaCO3)		
Alk MO (CaCO3)		
Chloride		
Nitrate		
Sulfate		
Phosphate		
Fluoride		
Nitrite		
Sulfide		
Silica		
TOTAL ANIONS		

	Mg/L
Solids	
Residue	
Total Dissolved Solids (Calc.)	
Hardness (CaCO3)	
Total Alkalinity as (CaCO3)	
Total Soluble Salts (EC)	
V.S.S.	
Foaming Agents (MBAS)	
B.O.D.	
C.O.D.	
Kjeldahl Nitrogen Total	
Other	
Dissolved Oxygen (DO)	
x Cyanide	0.02

TRACE METALS	Mg/L
Arsenic	
Silver	
Chromium	
Cadmium	
Lead	
Selenium	
Mercury	
Barium	
Chromium Hexavalent	
SPECIAL	
Boron	
Oil and Grease	
C.O.E.	
Phenols	
Pesticides	
PHYSICAL	
Color	
Taste	
Odor	
Turbidity	

000009

COMMENTS

ANALYST KLH KW

DATE REPORTED 01/10/84

ARIZONA DEPARTMENT OF HEALTH SERVICES

Division of Environmental Health Services
Bureau of Water Quality Control
402 West Congress, Room 214
Tucson, Arizona 85701
Telephone 628-5321

BRUCE BABBITT, Governor
DONALD B. MATHIS, Director

January 23, 1984

Mr. Robert G. Lee, General Manager
Tombstone Exploration, Inc.
P.O. Box 610
Tombstone, Arizona 85638

Dear Mr. Lee:

This office offers its thanks for the cooperation of you and your firm (Tombstone Exploration, Inc.) in working toward the rapid resolution of the potential problem related to the escape of the cyanide solution from your operation on or about Monday November 7, 1983.

This letter is written confirmation of discussions between Mr. Andrew M. Rendes of the Bureau of Water Quality Control staff and Mr. Gary Lindroos of T.E.I. and yourself, on Thursday January 19, 1984.

In response to questions by Mr. Lindroos to Mr. Rendes regarding this office's letter of December 28, 1983 outlining the sampling and monitoring program to be carried out by T.E.I., Mr. Rendes visited your site.

For any and all water and sediment analysis, Mr. Rendes informed Mr. Lindroos to be certain that the methods outlined in "Standard Methods for the Examination of Water and Wastewater" be used and followed. This book is published jointly by the American Public Health Association, American Water Works Association, and the Water Pollution Control Federation, to standardize analysis of chemicals. In addition, any and all equipment used for quantitative analysis must be capable of accurately measuring quantities less than 0.02 parts per million (ppm).

On an item by item basis of our December 28th letter, Mr. Rendes and Mr. Lindroos understand that: Item 1 - T.E.I. will design and impliment a water well sampling program. T.E.I. has indicated they will work with the City of Tombstone and sample the City's three water wells. This is acceptable to this office. The basic water chemistry plus cyanide is to be sampled for at all three wells, but the basic water chemistry need be sampled for only the first time to establish a base line. The sampling/monitoring is to be taken and performed once a month each month, until further notice, beginning with February 1984.

The Department of Health Services is An Equal Opportunity Affirmative Action Employer. All qualified men and women, including the handicapped, are encouraged to participate.

State Health Building 1740 West Adams Street Phoenix, Arizona 85007

Item 2 - T.E.I. will design and implement a surface water and sediment sampling program for cyanide. Two samples of soil/sediment are to be taken at each of three locations: One location above the T.E.I. property, one location in Emerald Gulch that received the spill, and one location downstream in Walnut Gulch past where the spill was contained. One soil/sediment sample at each site is to be taken from the stream bed/channel and the other is to be taken up off the bank in native soil. This soil/sediment sampling is to also be done monthly, beginning in February 1984 and continuing through July 1984.

Item 3 - T.E.I. will perform a comprehensive analysis of the rinse pond water and sediment that would be representative of that which escaped during the spill. Cyanide and trace metals are to be analyzed quantitatively and qualitatively.

Item 4 - T.E.I. is to inform the Bureau of Water Quality Control in writing, of any other potentially dangerous chemicals/materials that are/were used in the mining process.

The results from items 1 and 2 must be submitted monthly to this office and item 3 and 4 before the end of February 1984.

Since T.E.I. is removing the pond that was breached, at the request of the Bureau of Land Management, this office will be the proper one to notify to inspect the site, as mentioned in the BLM correspondence, to ascertain there is no threat to groundwater.

We again thank you for your past cooperation and look forward to your monitoring results.

Sincerely,

Stephen B. Devereaux

Stephen B. Devereaux, Acting Manager
Southern Regional Office
Environmental Health Services

SBD:AMR:ps

CC: Cochise County Health Department
City Clerk, City of Tombstone, 315 East Fremont, Tombstone, AZ 85638
Ed Swanson, Arizona Department of Health Services
John Freeman, BLM, 425 East 4th, Safford, AZ 85546

WESTERN TECHNOLOGIES INC.

3737 East Broadway Road
P.O. Box 21387
Phoenix, Arizona 85036
(602) 268-1381

LABORATORY ANALYSIS REQUEST AND FEE QUOTATION

Date 1-23-84 WTI Rep. Rick AmALFI

Client: Name Tombstone Exploration
Address Skyline Drive
Tombstone 85638

Mode: (Phone) Letter Meeting

Phone: 457-2231
Contact: Gary Lindroos

Material	Analysis	Methods	Turnaround	Price per sample
Sediment	Metals (As, Ba, Cd, Cr, Pb, Hg, Se, Ag)	EPA		120.00
	Cyanide, Free + Total	EPA		50.00
	Alkalinity	EPA		12.00
Well Water	Ca, Mg, Na, K, Alk, Cl, NO_3-N, SO_4, PO_4-P, F, Hardness	EPA	10-15 working days	105.00
Well Water	Cyanide, Free + Total	EPA		50.00

Remarks: Send Literature:

* Send Sample Bottles: 7 sets for sediments: 1 nitric, 1 sodium hydrox, 1 unpreserved (set contains)
8 sets for well water: 1 nitric, 1 sodium hydrox, 1 sulfuric, 1 unpreserved

Status:

TOMBSTONE EXPLORATION, INC.

30 January 1984

Arizona Department of Health Services
Bureau of Water Quality Control
402 West Congress, Room 214
Tucson, Arizona 85701

Attention: Mr. Andrew M. Rendes

Dear Mr. Rendes:

Tombstone Exploration, Inc. is implementing a water well sampling program and a water and sediment sampling program for cyanide. Western Technologies, 3737 East Broadway Road, Phoenix, Arizona 85036, has been retained to conduct the necessary analysis and submit required reporting data to those agencies involved.

Water and Sediment samples will be collected by February 2, 1984 and submitted to Western Technologies for analysis. This sampling program will be continued on a monthly basis through July 1984.

Sincerely,

Gary Lindroos
Lab Supervisor for
Tombstone Exploration, Inc.

GL/ckc

cc: Mr. Thomas H. Schloss
Mr. Dustin Escapule

000013

17 East 76th Street
New York, New York 10021
212-628-8466

P.O. Box 610
Tombstone, Arizona 85638
602-457-2231

WESTERN TECHNOLOGIES INC.

3737 East Broadway Road
P.O. Box 21387
Phoenix, Arizona 85036
(602) 437-3737

LABORATORY REPORT

Client Tombstone Exploration
Post Office Box 610
Tombstone, Arizona 85638

Job No.
Lab/Invoice No. 22140124
Date of Report 3/22/84

Project: Water and Sediment Analysis
Location: Tombstone Exploration
Material/Specimen: Water/Sediment — Sampled By: TE/Personnel — Date: 2/03/84
Source: Shown below — Submitted By: TE/G. Lindroos — Date: 2/03/84
Test Procedure: Shown below — Authorized By: TE/G. Lindroos — Date: 2/03/84

RESULTS

WATER SAMPLES

Sample Ident.	City Well #1	City Well #2	City Well #3	TEI Well #1	TEI Well #3
Fluoride (mg/L)	2.0	0.2	0.4	2.3	2.0
Nitrate - N (mg/L)	9.0	3.8	3.9	3.8	2.1
Total Alkalinity (mg/L as $CaCO_3$)	210.	179.	155.	172.	172.
Calcium (mg/L)	79.	52.	32.	60.	62.
Magnesium (mg/L)	22.	18.	17.	16.	13.
Sodium (mg/L)	28.	4.	13.	17.	15.
Potassium (mg/L)	3.	2.	3.	3.	2.
Chloride (mg/L)	40.	6.	8.	21.	16.
Sulfate (mg/L)	50.	7.	4.	27.	26.
Phosphate-P (mg/L)	<0.02	<0.02	<0.02	<0.02	<0.02
Cyanide, Free (mg/L)	<0.01	<0.01	<0.01	<0.01	<0.01
Cyanide, Total	<0.01	<0.01	<0.01	<0.01	<0.01

000014

Copies to: Client (1)

Analyst: Frederick A. Amalfi — Reviewed by: R. Alan Doughty, Ph.D.

SEDIMENT SAMPLES

Sample Ident.	Emerald Wash Above Spill	Emerald Bank Above Spill	Emerald Walnut Wash
Arsenic (ug/g)	27.3	4.4	0.7
Barium (ug/g)	57.5	83.2	67.9
Cadmium (ug/g)	9.2	<1.	<1.
Chromium (ug/g)	4.4	7.0	1.6
Lead (ug/g)	659.	73.4	<1.
Mercury (ug/g)	0.028	0.010	<0.010
Selenium (ug/g)	<1.	<1.	<1.
Silver (ug/g)	5.4	<1.	<1.
Alkalinity (ug/g) as $CaCO_3$	212.	223.	180.
Cyanide, Free (ug/g)	<0.1	<.1	<.1
Cyanide, Total (ug/g)	<0.1	0.23	0.14

Sample Ident.	Emerald Walnut Bank	Wash Below Spill	Bank Below Spill
Arsenic (ug/g)	1.4	0.6	<1.
Barium (ug/g)	75.3	51.6	53.
Cadmium (ug/g)	<1.	<1.	<1.
Chromium (ug/g)	2.4	1.4	2.2
Lead (ug/g)	<1.	<1.	<1.
Mercury (ug/g)	<0.010	<0.010	<0.010
Selenium (ug/g)	<1.	<1.	<1.
Silver (ug/g)	<1.	<1.	<1.
Alkalinity (ug/g) as $CaCO_3$	170.	148.	148.
Cyanide, Free (ug/g)	<0.1	<0.1	<0.1
Cyanide, Total (ug/g)	<0.1	<0.1	<0.1

METHODS OF ANALYSIS

	EPA Method
Sample preparation	3050
Arsenic	200.7
Barium	200.7
Cadmium	200.7
Chromium	200.7
Lead	200.7
Mercury	7471
Selenium	200.7
Silver	200.7
Alkalinity	310.1
Fluoride	340.2
Nitrate-N	353.3
Calcium	200.7
Magnesium	200.7
Sodium	200.7
Potassium	200.7
Chloride	325.3
Sulfate	375.4
Phosphate	365.2
Cyanide	335.2/9010

WESTERN TECHNOLOGIES INC. 10

• 3737 East Broadway Road / P.O. Box 21387 / Phoenix, Arizona 85036 / (602) 437-3737
• 2400 East Huntington Drive / Flagstaff, Arizona 86001 / (602) 774-8708
• 423 South Olsen Avenue / Tucson, Arizona 85719 / (602) 624-8894

Client Tombstone Exploration
Post Office Box 610
Tombstone, Arizona 85638

LAB/INVOICE NO. 7714074

Job No. TEST

Date 3/12/84

Project Water and Sediment Analysis

Location Tombstone, Arizona

Authorized By Gary Lindroos

Type of Work Water and Sediment Analysis

Client P.O. No.

Special Instructions: Please pay from this invoice. Results will be mailed upon receipt of payment. Thankyou.

CHARGES

Quantity	Description	Unit	Amount
5	Well Water Analysis	105.00	$525.00
6	Free and Total Cyanide	50.00	300.00
6	Sediment Analysis	132.00	792.00
Function	152	Total Charges This Invoice	$1617.00

PAID 3/19/84
CK #4909
PO #65584

Invoiced By Frederick A. Amalfi

110

Show purchase order number on all invoices and packages. Excess transportation charges on partial shipments will be deducted from payment of invoices.

By Purchasing Agent

Tombstone Exploration Inc
SKYLINE DRIVE P.O. BOX 610
65584

000016

WESTERN TECHNOLOGIES INC.

3737 East Broadway Road
P.O. Box 21387
Phoenix, Arizona 85036
(602) 437-3737

LABORATORY REPORT

Client: Tombstone Exploration
Post Office Box 610
Tombstone, Arizona 85638

Job No.
Lab/Invoice No. 22140184-1
Date of Report 3/22/84

Project: Water Analysis
Location: Tombstone, Arizona
Material/Specimen: Water — Sampled By: TEI/Personnel — Date: 2/22/84
Source: Pond 2 — Submitted By: TEI/G. Lindroos — Date: 2/22/84
Test Procedure: Shown below — Authorized By: TEI/G. Lindroos — Date: 2/22/84

RESULTS

Parameter	Concentration (mg/L)	EPA Method
Fluoride	2.4	340.2
Nitrate-N	12.3	353.3
Alkalinity (as $CaCO_3$)	197.	310.1
Calcium	103.	200.7
Magnesium	28.	200.7
Sodium	26.	200.7
Potassium	4.	200.7
Chloride	70.	325.3
Sulfate	75.	375.4
Phosphate-P	<0.02	365.2
Cyandie (Free)	19.6	335.2 (w/o distillation
Cyanide (Total)	25.8	335.2

000017

Copies to: Client (1)

Analyst: Frederick A. Amalfi — Reviewed by: R. Alan Doughty, Ph.D.

WESTERN TECHNOLOGIES INC.

3737 East Broadway Road
P.O. Box 21387
Phoenix, Arizona 85036
(602) 437-3737

LABORATORY REPORT

Client: Tombstone Exploration Inc.
Post Office Box 610
Tombstone, Arizona 85638

Job No.:
Lab/Invoice No.: 22140184-2
Date of Report: 3/22/84

Project: Sediment Analysis
Location: Tombstone, Arizona
Material/Specimen: Sediment — Sampled By: TEI/Personnel — Date: 2/22/84
Source: Wash Plant — Submitted By: TEI/G. Lindroos — Date: 2/22/84
Test Procedure: Shown below — Authorized By: TEI/G. Lindroos — Date: 2/22/84

RESULTS

Parameter	Concentration (ug/g)	EPA Method
Arsenic	164.	200.7
Barium	171.	200.7
Cadmium	12.6	200.7
Chromium	1.8	200.7
Lead	2090.	200.7
Mercury	<0.01	7471
Selemium	<1.	200.7
Silver	<1.	200.7
Alkalinity (as $CaCO_3$)	254.	310.1
Cyanide, Free	6.	335.2/9010 w/o distillation
Cyanide, Total	6.	335.2

000018

Copies to: Client (1)

Analyst: Frederick A. Amalfi — Reviewed by: R. Alan Dougherty, Ph.D.

WESTERN TECHNOLOGIES INC.
• 3737 East Broadway Road / P.O. Box 21387 / Phoenix, Arizona 85036 / (602) 437-3737
• 2400 East Huntington Drive / Flagstaff, Arizona 86001 / (602) 774-8708
• 423 South Olsen Avenue / Tucson, Arizona 85719 / (602) 624-8894

5978

Client Tombstone Exploration Inc.
Skyline Drive
Post Office Box 610
Tombstone, Arizona 85638

LAB/INVOICE NO. 22140184

Job No. WATER

Date 3/22/84

Project TEI Pond 2
TEI Wash Plant

Location

Authorized By Gary Lindroos

Type of Work Water and Sediment Analysis

Client P.O. No.

Special Instructions:

CHARGES

Quantity	Description	Unit	Amount
1	Water Analysis	105.00	$105.00
2	Free and Total Cyanide	50.00	100.00
1	Sediment Analysis	132.00	132.00
Function: 156		Total Charges This Invoice	$337.00

110

Invoiced By Frederick A. Amalfi

WESTERN TECHNOLOGIES INC.

3737 East Broadway Road
P.O. Box 21387
Phoenix, Arizona 85036
(602) 437-3737

LABORATORY REPORT

Client

Tombstone Exploration Inc.
Skyline Drive P.O. Box 610
Tombstone, AZ 85638

Job No.

Lab./Invoice No. 22140305

Date of Report 4/23/84

Reviewed By

Project Cyanide Analysis

Location Tombstone, AZ

Material/Specimen Soil — Sampled By TEI/A.M. Rendes — Date 3/26/84

Source Shown Below — Submitted By TEI/G. Lindroos — Date 3/26/84

Test Procedure EPA 335.2 — Authorized By TEI/G. Lindroos — Date 3/26/84

RESULTS

Sample Identification	Total Cyanide (ug/g)
TEI #1 South	< 0.01
TEI #2 North	< 0.01

Analyst: Frederick A Amalfi
Frederick A. Amalfi

Reviewed: R. Alan Doughty
R. Alan Doughty, Ph.D.

Copies to: A. M. Rendes
Bureau Water Quality Control
402 W. Congress, Room 214
Tucson, AZ 85701

MAY 7 1984

WESTERN TECHNOLOGIES INC.
• 3737 East Broadway Road / P.O. Box 21387 / Phoenix, Arizona 85036 / (602) 437-3737
• 2400 East Huntington Drive / Flagstaff, Arizona 86001 / (602) 774-8708
• 423 South Olsen Avenue / Tucson, Arizona 85719 / (602) 624-8894

5978

Client Tombstone Exploration Inc.
Post Office Box 610
Tombstone, Arizona 85638

LAB/INVOICE NO. 22140305

Job No. Test

Date 4/23/84

Project Cyanide Analysis

Location Tombstone, AZ

Authorized By G. Lindroos

Type of Work Inorganic

Client P.O. No.

Special Instructions:

CHARGES			
Quantity	Description	Unit	Amount
2	Total Cyanide	35.00	70.00

RECEIVED 5-7-84

Function: 152

Total Charges This Invoice 70.00

110

Invoiced By FAA

WESTERN TECHNOLOGIES INC.

3737 East Broadway Road
P.O. Box 21387
Phoenix, Arizona 85036
(602) 437-3737

LABORATORY REPORT

Client

Tombstone Exploration Inc.
Skyline Drive
Tombstone, AZ 85638

Job No.

Lab./Invoice No. 22140319

Date of Report 4/23/84

Reviewed By

Project Cyanide Analysis

Location Tombstone, AZ

Material/Specimen Water — Sampled By TEI/Personnel — Date

Source Shown Below — Submitted By TEI/G. Lindroos — Date

Test Procedure EPA 335.1, 335.2 — Authorized By TEI/G. Lindroos — Date

RESULTS

Sample Identification	Free Cyanide (mg/L)	Total Cyanide (mg/L)
TEI #1 City well	< 0.01	< 0.01
TEI #2 City well	< 0.01	< 0.01
TEI #3 City well	< 0.01	< 0.01

Analyst: Frederick A Amalfi

Copies to: F. A. Amalfi

Reviewed: R. Alan Doughty

R. Alan Doughty, Ph.D.

MAY 7 1984

WESTERN TECHNOLOGIES INC.

• 3737 East Broadway Road / P.O. Box 21387 / Phoenix, Arizona 85036 / (602) 437-3737
• 2400 East Huntington Drive / Flagstaff, Arizona 86001 / (602) 774-8708
• 423 South Olsen Avenue / Tucson, Arizona 85719 / (602) 624-8894

Client

Tombstone Exploration Inc.
Skyline Drive P.O. Box 610
Tombstone, AZ 85638

LAB/INVOICE NO. 22140319

Job No. Test

Date 4/23/84

Project Cyanide Analysis

Location Tombstone, AZ

Authorized By G. Lindroos

Type of Work Inorganic

Client P.O. No.

Special Instructions:

CHARGES			
Quantity	Description	Unit	Amount
3	Free & Total Cyanide	50.00	150.00

RECEIVED 5-7-84

Function: 152

Total Charges This Invoice 150.00

110

Invoiced By FAA

000023

TOMBSTONE EXPLORATION, INC.

MEMO

24 May 1984

TO: Thomas Schloss, President

FR: Gary Lindroos, Lab Supervisor

RE: Cyanide Spill

Due to the cyanide spill that occurred on Monday, November 7, 1983, we were notified by the Arizona Department of Health Services to do the following:

1) Design and implement a water well sampling program. Basic water chemistry plus cyanide to include: calcium, magnesium, sodium. pheonolphthalien alkalinity, total alkalinity, chloride nitrate, sulphate, total phosphates, flourides, hardness and potassium.

2) Design and implement a surface water and sediment sampling program for cyanide to confirm the thoroughness of the cleanup operation.

3) Perform a comprehensive analysis of the rinse pond water and sediment, including cyanide and trace metals. It also had to include in-stream and off-stream (for control) sediments from above the operation to a down stream point on the main highway (U.S. 80) in the Northwest corner of Tombstone.

4) Inform the Bureau of Water Quality Control if other potentially dangerous chemicals were used in the mining process If there was, then they should also be sampled.

The cost of the above, to date, is as follows:

Western Technologies	$2174.00
Mountain States Research & Development	$ 216.00
T.E.I. Man Hours	185.25
TOTAL:	$2575.25

(Copies of Lab reports and invoices attached)

Gary Lindroos
Lab Supervisor

GL/ckc

000024

TOMBSTONE EXPLORATION, INC.

July 2, 1984

Western Technologies
3737 E. Broadway Road
P. O. Box 21387
Phoenix, Arizona 85036

Attention: Allen Doughty

Dear Mr Doughty:

Enclosed you will find samples of Tombstone City water wells and sediment samples from Emerald Gulch and Walnut Gulch.

Please run samples in accordance with requirements of Arizona Department of Health Standards, Bureau of Water Quality Control, 42 West Congress, Room 214, Tucson, Arizona 85701.

Samples are in ses of five (5) each, taken July 2, 1984, order of samples are as follows:

1) Sediment Emerald Wash, (above spill)
2) Sediment Emerald Wash at Walnut (mid-spill)
3) Walnut Wash (below spill)

4) Tombstone City Well No. 1
5) Tombstone City Well No. 2
6) Tombstone City Well No. 3

Sincerely,

TOMBSTONE EXPLORATION, INC.

Gary A. Landroos
Lab Supervisor

GAL/ckc

000025

17 East 76th Street
New York, New York 10021
212-628-8466

P.O. Box 610
Tombstone, Arizona 85638
602-457-2231

TOMBSTONE EXPLORATION, INC.

July 27, 1984

Western Technology Inc.
3737 East Broadway Road
Phoenix, Arizona 85036

Dear Sirs:

Enclosed find 3 water samples from the City of Tombstone, Arizona Water Wells. Please run samples for Free Cyanide and Total Cyanide. Copies of report should be sent as follow:

1 Tombstone Exploration Inc.

2 City of Tombstone, Arizona 85638

3 State Bureau of Water Quality Control

Sincerely,

Gary A. Lindroos

000026

17 East 76th Street
New York, New York 10021
212-628-8466

P.O. Box 610
Tombstone, Arizona 85638
602-457-2231

TOMBSTONE EXPLORATION, INC.

July 31, 1984

Western Technology
3737 East Broadway Road
Phoenix, Arizona 85036

Dear Sirs:

Enclosed find 3 water samples from Tombstone Exploration, Inc. water wells. Please run samples for free cyanide and total cyanide.

Copies of report should be sent as follows:

(1) Tombstone Exploration, Inc.
P. O. Box 610
Tombstone, Arizona 85638

(2) State Mine Inspector
750 Capitol Tower
Attention: Mr. Bobbie Martin
Phoenix, Arizona 85007

(3) Arizona Department of Health Services
Bureau of Water Quality Control
402 West Congress, Room 214
Tucson, Arizona 85701

If you have any questions regarding these tests please feel free to contact me at any time.

Sincerely,

Cary A. Lindroos

000027

17 East 48th Street
New York, New York 10017

P.O. Box 6
Tombstone, Arizona 85638
602-457-2221

Correspondence + Misc.

Office of the Mayor

CITY OF TOMBSTONE, ARIZONA

P.O. BOX 339 TOMBSTONE, ARIZONA 85638 (602) 457-2202

March 28, 1986

Cochise County Health Department
211 Bartow Drive
Sierra Vista, Arizona 85635

Dear Sirs:

Again the many headed Hydra monster "cyanide contamination" has reared its head over the citizens of Tombstone.

Preparations are now underway to reopen what was T.E.I. mining operations presumably under another name - but under the same personnel essentially.

On August 22, 1984, the United States Environmental Protection Agency, in conjunction with the Arizona Department of Health Services, conducted an inspection of Tombstone Exploration's mining facilities and made the following recommendations:

1. A thorough hydrogeologic study of the area should be undertaken at the expense of T.E.I. by carefully selected individuals with expertise in the area of geology and hydrology to include the use of tracers, water level measurements, and diffraction methods to map the direction and rate of ground water flow in the area.

2. Monitoring wells should be installed such that plume location, plume size, and extent of contamination can be determined with the frequency of sampling from these wells to be determined by the state.

3. Tombstone Exploration has been instructed to line all existing and future ponds if they continue operating.

4. Lysimeters for leak detection should be installed under the ponds to assist in the prevention of future incidents.

5. Chlorinators should be installed.

6. City wells and the T.E.I. wells should be closely monitored.

To our knowledge the only recommendation that has been carried out is the recommendation that the wells be monitored, and the city wells are being monitored at the sole expense of the City of Tombstone which is patently unfair since the City did not create this problem.

These administrators (once T.E.I. - now?) are the same individuals who kept a cyanide leak into one of their wells a secret from the city and the regulatory agencies for months.

Not only have the recommendations made by the inspecting team been ignored, but no cleanup from the last operations has been performed. Even contaminated cyanide drums are still scattered over the property.

Therefore, we again urge you to use all the powers and resources at your command to insure that the recommendations of the U.S. Environmental Protection Agency and the Arizona Department of Health Services be carried out; that there be continuous monitoring of the operations of these mining interest and their wells by governmental agencies; and that every conceivable effort be made to insure that the citizens of Tombstone do not suffer in any manner from these mining operations.

We also insist that no permits to commence mining operations be issued until all the aforesaid recommendations of the Environmental Protection Agency and the Department of Health Services have been carried out and adequate insurances given to all agencies involved and to the Mayor and Council of Tombstone that the health and welfare of the citizens of Tombstone have been protected.

We also insist that we be given written notice of any and all proceedings affecting these mining interests, so that the rights and welfare of the citizens of Tombstone may be protected.

Please read the attached magazine article by Andy Zipper to understand the buck-passing, inaction, and indifference to our pleas from the regulatory agencies who are supposed to protect us.

Also find enclosed May 8, 1985, letter from Chuck Anders, with assurances marked in red.

Very truly yours,

Ben T. Traywick
Councilman Ward 3
Tombstone

Alex Gradillas
Mayor
Tombstone

ARIZONA DEPARTMENT OF HEALTH SERVICES

BRUCE BABBITT, Governor
LLOYD F. NOVICK, M.D., M.P.H., Director

June 02, 1986

Mr. Frank Magini
Cochise Silver Mines, Inc.
4831 N. 42nd Ave.
Phoenix, Arizona
85019

Dear Mr. Magini:

Re: Contention Mine;
Cochise Silver Mines
Site Inspection

Enclosed is the report of my May 22, 1986 inspection of the referenced facility to determine compliance with the Groundwater Regulations, R9-20-201 thru 226. The Department had received reports that you may have been operating without a Groundwater Quality Protection Permit. My findings are summarized below.

There was no cyanide leaching occurring on site. In fact, there is no cyanide on site at all. All empty cyanide barrels have been crushed and are still on site. These should be disposed of at an approved landfill. I will be coordinating with Tibaldo Canez of our Department to determine which landfill would be appropriate. The water has been removed from Pond #1, and the sludge is drying. My recommendation is to halt any further work on the pond(s) until an reclamation/closure plan is submitted and approved. The closure of the ponds should be conducted by an independent Engineering/Consulting firm. The details of both the pilot plant and proposed full scale leaching operations must be submitted for approval, and a permit issued before operations may begin.

The Department of Health Services is An Equal Opportunity Affirmative Action Employer.

Central Palm Plaza Building 2005 North Central Avenue Phoenix, Arizona 85004

If you have any questions concerning this matter, feel free to call me at 257-2270.

Sincerely,

Roger Kennett

Roger Kennett
Env. Eng. Specialist
Water Permits Unit

RK:do

Enclosure

cc: Corine Li, EPA Mailstop W-6
Alex Gradillas, Mayor of Tombstone
Carol Mordhorst, Director, Cochise County Health Dept
Jim Maston, Manager, SRO
Ron Miller
Charles Anders
Pamela Swift
Jim Vieregg, Attorney General's Office
Dusty Escapule, Cochise Silver Mines
Jim Matt, State Mine Inspector's Office
Scott Larson, American Engineering

REPORT OF SITE INSPECTION

BY: Roger Kennett, Env. Eng. Spec. RK
Water Permits Unit

RE: Contention Mine (Tombstone); Cochise Silver Mines Inc.

On May 22, 1986, I visited the mine/mill site formerly operated by Tombstone Exploration Inc. (TEI). A new leasee (land is owned by Tombstone Development Corp.), Cochise Silver Mines, is in the process of applying for a Groundwater Quality Protection Permit to operate a new cyanide leaching facility. The purpose of the visit was to establish that no new leaching was occurring, ascertain the disposition of empty cyanide barrels, inspect the condition of the process ponds used by TEI, and inspect the area to be used for the new facility.

I arrived on site at about 2 p.m., and met Dusty Escapule, who was to show me around. I explained my purpose and the items I wanted to cover. The empty cyanide barrels had been stored on top of the hill above the facility's fresh water reservoir. Mr. Escapule said the barrels were rinsed during the 4 years of operation as they were emptied and taken to the top of the hill. The last barrels were rinsed about 1.5 years ago when operations ceased. Toward the end of operations, EPA helped design a rinsing system whereby the rinsate was contained in one of the process ponds. Some of the barrels are in a locked, fenced area near the guard house. Mr. Escapule said these contain silica slag along with some silver. About six barrels near the old recovery building contain powdered lime. Another 15 or so inside the building contain diatomaceous earth. The present disposition of the empty barrels on the hill is that they have been flattened by a bulldozer, and for the most part, are stacked in one pile, roughly 10 feet thick and 20 feet across. There are a few still scattered around the hilltop. I recommend these crushed barrels, and all other empty barrels not being used for other purposes be disposed of at an approved county landfill. Coordination through Ty Canez should insure the chosen landfill understand the situation clearly.

The lined pond (Pond #1) has all the water removed, and the sludge in the bottom has mud cracks forming on it. I would estimate the sludge to be about 3-4 feet thick in the center. It is still quite wet. Samples of this material were collected by both Mr. Escapule and American Engineering. As of the drafting of this report, we have not received the results of analysis. I recommend that no further reclamation work be performed on this or other ponds until a plan is submitted to and approved by the Department. The plan should be included in the Proposal for Permit Application. I recommend that when the liner has been removed, shallow soil borings (approximately 20' deep) be drilled through the bottoms of all three ponds, preferably with a hollowstem auger, and split spoon samples taken at five foot intervals. These should be analyzed by EPA approved test methods (Test Methods for Evaluation Solid Waste, SW-846, 2nd Edition) for the following constituents:

Cyanide (Total & Amenable)
Arsenic
Barium
Cadmium
Chromium (Total)
Lead
Mercury
Selenium
Silver

After receiving the results of these analyses, the proper closure methods will be determined.

The proposed area for the new leaching operation is on the opposite side of the aforementioned hill (where the crushed drums are stockpiled) from the old pads and ponds. Mr. Escapule explained how and where the various portions of the system would be constructed. I let him know that all construction details, including leak detection systems and flood control dikes, had to be included in the permit application before I could pass judgement. My impression is that significant caution should be taken to prevent excessive runoff from entering and leaving the site.

His description of the leaching circuit included agitation of the material in a trommel with cyanide and spread out on the pad with a slurry pump. The pad would be terraced in a fashion to allow the large solids to fall out. The pregnant solution would then flow into a first pond for settling out some of the fines, then pumped to a second pond which would lead to the recovery circuit.

Cochise Silver Mines does not plan to actively mine new ore at this time. Rather, they plan to leach the stockpile of tails that exists at the site. In order to determine the proper chemistry and feasability of the full scale operation, they wish to perform a pilot test on approximately 20-30,000 tons. They propose to do this at the old wash site. This is an area where the tails were washed in the past to extract the last remaining silver values and clean the aggregate for sale as construction material. The "wash pad" area received the fines. According to Mr. Escapule, the pad was constructed of caliche, two feet thick, placed and compacted in six inch lifts. They propose to place the leaching slurry on this "wash pad" in order to decant the solution. I told Mr. Escapule I had reservations about doing this since I had no knowledge of the liner integrity. He says engineering documents exist, but may be difficult to obtain. I explained this was another item that should be included in the permit application. I also have a fundamental problem with using calcium carbonate materials as a containment structure due to the possibility of the formation of dissolution cavities. I recommend that the pilot test be put on hold until we have the opportunity to review the pertinent information concerning the operation, and a permit has been issued.

There had been reports of some buried equipment being unearthed. I asked to see this equipment. It is a belly dump scraper which has had the bottom welded together. It has no tires and looks immobile. It was explained that it had been used in the washing process previously mentioned. There were other items associated with it such as small tanks, water lines, and wires. Mr. Escapule said it had been buried by Colorado-Arizona Tractor Company hired by the Saveco Finance Co. to repossess the heavy equipment. The purpose of burying it apparently was in order to drive over it to haul the equipment they were repossessing.

RK:me

SRO-AQ-1164

ARIZONA DEPARTMENT OF HEALTH SERVICES

Office of Air Quality Management
4040 East 29th Street
Tucson, Arizona 85711
Telephone 628-5321

BRUCE BABBITT, Governor
LLOYD F. NOVICK, M.D., M.P.H., Director

June 2, 1986

Mr. Dustin Escapule
Cochise Silver Mine
P.O. Box 1103
Tombstone, Az 85638

Dear Dusty:

Please find enclosed two "Applications for Installation Permit" forms and the "Filing Instructions for Installation Permit Applications" for your crusher, as per out converstion.

If you have any questions, please feel free to contact me.

Sincerely,

W Columbus

Wm. L. Columbus, P.E., Manager
Air Quality Operations
Southern Regional office

WLC:ps
Enc.

CC: David O. Chelgren
Anthony Leverock

000035

COCHISE SILVER MINES
4831 N. 42nd Avenue
Phoenix, Arizona 85019
June 3, 1986

Arizona Department of Health Services
Roger Kennett
Environmental Engineering Specialist
Office of Waste & Water Quality Management
2005 N. Central Avenue
Phoenix, Arizona 85004

Dear Mr. Kennett,

In response to your letter of June 2, 1986, we would like to make a few comments. First of all, we have, I believe, shown our good faith and good intentions by starting clean up of the ponds and the well as per general consensus at our original meeting in March, 1986. The well has been pumped and cleaned up considerably and weekly tests show that it is almost clean. In your letter you recommend that we halt further work for the present. We feel that we are being discriminated against by this recommendation and penalized for taking this clean up initiative even though all of the results thus far have been positive.

Secondly, regarding the pilot plant, we want you to understand that no more cyanide will come in contact with the surface area than that which is already present.

Furthermore, we are aware of and will take precautions so that all the cyanide contaminated material will be cleaned up and a final analysis by an independent engineering firm will show that such has been done. Any other materials coming in contact with the ground will be treated and rinsed to prevent any further contamination.

If you have any further questions, please give me a call at 242-7315.

Sincerely,

Frank Magini
President, Cochise Silver Mines

6/4/86

Dusty,

Please feel free to make any + all changes you want. This is only a rough draft.

Thanks,

Melissa

000036

Memo

From
AUDREY LIND

January 27, 1987

To Magini Contracting
Melissa

Mr. Gary Lindroos has given your company name as being responsible for testing of water samples that he will be submitting in the name of Cochise Silver Mines. He has requested Mercury, Nitrate N, Free & Total Cyanide on 5 wells. The charge for this analysis is $59.00 each sample for a total of $295.00. This amount will be payable before the results of the tests will be released.
If you have any problem with this arrangement, please contact me or our manager, Bob Drake.

Audrey Lind
Audrey M. Lind
Office Manager

cc: Mr. Gary Lindroos
Cochise Silver Mines
Skyline Drive
Tombstone, AZ. 85638

ARIZONA TESTING LABORATORIES
817 West Madison
PHOENIX, ARIZONA 85007
(602) 254-6181

COCHISE SILVER MINES, INC.
P. O. Box 158
Tombstone, Arizona 85638

February 2, 1987

Arizona Testing Laboratories
817 West Madison
Phoenix, Arizona 85007

Dear Sirs:

Enclosed please find "Self-Monitoring Form" supplied by the Arizona Department of Health Services. Request that three (3) copies of this form be sent to:

Arizona Department of Health Services
Office of Waste and Water Quality Management
Compliance Section
Room 304
2005 North Central
Phoenix, Arizona 85004

In compliance with our Groundwater Quality Protection Permit No. G-0011-02 request that the following EPA Analysis Methods be used:

Cyanide (Free)	335.1
Cyanide (Total)	335.2
Mercury	245.1
Nitrate (as N)	353.2

If you have any questions please feel free to contact me at 457-2282 at any time.

Sincerely yours,

Gary A. Lindroos

File Copy

ARIZONA DEPARTMENT OF HEALTH SERVICES

March 12, 1987

EVAN MECHAM, GOVERNOR
TED WILLIAMS, DIRECTOR

Gary A. Lindroos
Cochise Silver Mines, Inc.
Post Office Box 158
Tombstone, Arizona 85638

Dear Mr. Lindroos:

RE: Cochise Silver Mines, Inc.
Groundwater Quality Protection Permit No. G-0011-02

With your concurrence by your letter of January 23, 1987, we have made minor modifications to the above referenced permit to correct typographical errors on page 4. The EPA analysis method number has been changed to 245.1 for TEI wells #2 and 3.

Enclosed is a copy of the corrected page 4. Please replace the page 4 in your present copy of the permit with it.

If you have any questions, please feel free to call me at 257-6806.

Sincerely,

Roger Kennett

Roger Kennett
Water Permits Unit

RK:mm

Enclosure

cc: Frank Magini
Cochise County Health Department
Water Pollution Compliance
Southern Regional Office
State Lab, Attn: Grace Mossman

000039

The Department of Health Services is An Equal Opportunity Affirmative Action Employer

Central Palm Plaza Building 2005 North Central Avenue Phoenix, Arizona 85004

MEYER, HENDRICKS, VICTOR, OSBORN & MALEDON
A PROFESSIONAL ASSOCIATION

PAUL J. MEYER
DAVID VICTOR
WILLIAM J. MALEDON
ANDREW D. HURWITZ
RANDALL C. NELSON
LUCIA FAKONAS HOWARD
DONALD W. BIVENS
MARK S. WALLACE
RON KILGARD
DONALD M. PETERS
DAVID G. CAMPBELL
C. TAYLOR ASHWORTH
GARY A. GOTTO
WILLIAM M. HARDIN
ANNA L. DURAND
DAVID B. ROSENBAUM
W. SCOTT BALES
JOHN R. HANNAH
WILLIAM J. SIMS III
MARK D. SAMSON
EDWIN F. HENDRICKS
JONES OSBORN II
LARRY A. HAMMOND
ROBERT L. PALMER
JEFFREY L. SELLERS
R. DOUGLAS DALTON
VINCENT F. CHIAPPETTA *
COLIN F. CAMPBELL
JAY I. MOYES
THOMAS H. CURZON
JOHN A. LASOTA, JR.
HELEN PERRY GRIMWOOD
THOMAS D. PROFFITT
BRETT L. DUNKELMAN
JEFFREY C. ZIMMERMAN
DIANE M. JOHNSEN
JON M. SANDS
TANNIS L. FOX
HELEN M. SANDALLS
* REGISTERED PATENT ATTORNEY

SUITE 4000
2700 NORTH THIRD STREET
PHOENIX, ARIZONA 85004
602-263-8700

TELEX TWX 910-950-1101
TELECOPY (24 HOURS)
602-266-6751

FILE NO.

May 6, 1987

Mr. Raymond A. Harper
Cochise Silver Mine
2412 East Montebello
Phoenix, Arizona 85016

Re: Enclosed Environmental Law Letter

Dear Ray:

I am enclosing a copy of a letter I recently prepared for general distribution to our clients concerning the many major recent changes to Arizona environmental laws. Jay suggested that I send you a copy.

The letter gives an overview of the many recent statutory and regulatory changes. It does not specifically address the issues raised by the Cochise Silver Mine operations, but it will give you a feel for the kinds of regulations that may apply to those operations in the near future.

Jay has suggested that we meet in the near future to discuss your leaching operation. Please feel free to call me if you have any questions in the meantime.

Very truly yours,

Jeffrey C. Zimmerman

JCZ:kh

Enclosure

cc: Jay I. Moyes, Esq.

MEYER, HENDRICKS, VICTOR, OSBORN & MALEDON
A PROFESSIONAL ASSOCIATION

PAUL J. MEYER
DAVID VICTOR
WILLIAM J. MALEDON
ANDREW D. HURWITZ
RANDALL C. NELSON
LUCIA FAKONAS HOWARD
DONALD W. BIVENS
MARK S. WALLACE
RON KILGARD
DONALD M. PETERS
DAVID G. CAMPBELL
C. TAYLOR ASHWORTH
GARY A. GOTTO
WILLIAM M. HARDIN
ANNA L. DURAND
DAVID B. ROSENBAUM
W. SCOTT BALES
JOHN R. HANNAH
WILLIAM J. SIMS III
MARK D. SAMSON
EDWIN F. HENDRICKS
JONES OSBORN II
LARRY A. HAMMOND
ROBERT L. PALMER
JEFFREY L. SELLERS
R. DOUGLAS DALTON
VINCENT F. CHIAPPETTA *
COLIN F. CAMPBELL
JAY I. MOYES
THOMAS H. CURZON
JOHN A. LASOTA, JR.
HELEN PERRY GRIMWOOD
THOMAS D. PROFFITT
BRETT L. DUNKELMAN
JEFFREY C. ZIMMERMAN
DIANE M. JOHNSEN
JON M. SANDS
TANNIS L. FOX
HELEN M. SANDALLS
* REGISTERED PATENT ATTORNEY

SUITE 4000
2700 NORTH THIRD STREET
PHOENIX, ARIZONA 85004
602-263-8700

TELEX TWX 910-950-1101
TELECOPY (24 HOURS)
602-266-6751

FILE NO.

May 6, 1987

Mr. Raymond A. Harper
Cochise Silver Mine
2412 East Montebello
Phoenix, Arizona 85016

Re: Arizona Environmental Quality Act

Dear Ray:

Last year the Arizona legislature enacted major environmental control legislation. This letter is being sent to you at Jay Moyes' suggestion, as a client who may be affected by the legislation, to provide a comprehensive introduction to the developments that may affect your business. After you have reviewed this letter, we can discuss any questions you may have about how particular portions of the new laws apply to your business.

The center of the new legislation is the Environmental Quality Act ("EQA"). EQA subjects many facilities and activities to state environmental regulation for the first time. The main provisions of EQA are currently codified in Arizona Revised Statutes at §§ 36-3501 et seq. As of July 1 of this year, they will be transferred to a new Title 49 of the Arizona Revised Statutes. All EQA citations in this letter are to Title 49.

Part I of this letter summarizes how EQA and related new statutes and regulations may affect your business. Part II describes the major relevant provisions of EQA and related legislation. Part III discusses the current status of pending and proposed regulations to implement the new laws. Finally, Part IV suggests how you can become involved in and affect the regulation development process.

Part I. How EQA May Affect Your Business.

Your business may have to:

(1) obtain an additional environmental permit called an aquifer protection permit. Facilities and activities that may adversely affect groundwater quality will need such a permit,

issued by a new regulatory agency, the Department of Environmental Quality ("DEQ"). DEQ will be split off from the existing Department of Health Services on July 1, 1987. (Until July 1, DHS is responsible for most DEQ functions);

(2) report to DEQ and clean up existing sources of potential groundwater contamination, such as soil contaminated by hazardous materials spills or dry wells down which chemicals have leaked or been poured;

(3) employ certain technologies or management practices, or retrofit facilities with control equipment, to minimize groundwater contamination;

(4) undergo periodic state inspections and re-permitting procedures;

(5) perform more detailed monitoring of pollutant discharges;

(6) prepare a facility closure and post-closure plan;

(7) register with DHS all dry wells; and

(8) comply with stringent new underground storage tank rules.

Part II. Major Provisions of EQA and Related Laws.

EQA

EQA closely parallels the federal Resource Conservation and Recovery Act ("RCRA") and Superfund laws. It goes beyond those laws in its emphasis on groundwater pollution and its applicability to any polluting facility or activity, no matter how small. EQA contains no "small generator" or similar exemption from regulation.

EQA generally requires virtually any facility or activity that may affect surface water or groundwater quality in Arizona to obtain an aquifer protection permit. A.R.S. § 49-241(A). Certain classes of facilities defined by statute must obtain permits, including:

1. surface impoundments, including pits, ponds and lagoons for holding, storing, settling, treating or disposing of polluting materials;

2. solid waste disposal facilities (such as landfills);

3. facilities that add a pollutant to a salt dome formation, dry well, cave or mine;

4. mine tailings piles and ponds and mine leaching operations;

5. septic tanks with a capacity greater than two thousand gallons per day;

6. groundwater recharge and underground water storage projects;

7. point source discharges to navigable waters; and

8. sewage or sludge ponds and wastewater treatment facilities. A.R.S. § 49-241(B).

Any other facility or activity that may degrade water quality could also need a permit (unless exempted as discussed below). Such facilities and activities could include:

1. construction activities;

2. hazardous waste treatment, storage or disposal facilities, and possibly hazardous waste generator facilities;

3. agricultural activities; and

4. land on which hazardous materials have spilled or been disposed of.

The statute specifically exempts only a few facilities and activities from the permit requirement, including:

1. household and domestic activities, including household gardening, landscape irrigation and maintenance;

2. the noncommercial use of consumer products;

3. livestock and wildlife ponds;

4. water reservoirs, canals and ditches, if effluent is not added;

5. discharges to a community sewer system;

6. mining overburden returned to the excavation site;

7. facilities that have an effluent reuse permit;

8. surface impoundments used solely to contain storm runoff;

9. natural leaching of precipitation, provided that no pollutants are added because of human activities; and

10. closed facilities. A.R.S. § 49-250(B).

In the most recent draft of its aquifer protection permit regulations, DHS has proposed an administrative exemption from the permit requirements for properly constructed and operated dry wells that do not drain hazardous substance loading docks; facilities that have RCRA hazardous waste permits; wash water from sand and gravel and placer mining operations, if no chemicals are added from such processing; and certain lined ponds at sewage treatment plants.

In the same draft regulations, DHS has also proposed exempting from the required individual permits, through the issuance of "general permits" (discussed below in this Part), additional facilities and activities:

1. small home septic tanks;

2. hydrostatic tests of new pipelines;

3. hydrostatic tests of used natural gas pipelines provided that all leakage is collected and properly disposed of;

4. surface impoundments that receive groundwater from water quality sampling procedures;

5. facilities that have an NPDES permit, if they discharge to a perennial stream and remain in compliance with the terms of the permit; and

6. dry wells that receive only condensate from refrigeration units, unpolluted overflow from evaporative coolers, swimming pool filter backwash, or drinking water treatment plant filter backwash.

To obtain an individual permit, the applicant must demonstrate that its facility will employ the "best available demonstrated control technology" ("BADCT") to ensure the greatest achievable degree of discharge reduction, including zero discharge where practicable. A.R.S. § 49-243(B). BADCT must be employed by all facilities, no matter how minor their discharges. The exact parameters of BADCT are uncertain. However, the theory behind BADCT is that if there is a practicable control technology for a certain class of facilities and it is used somewhere in the country, it can be required for facilities in Arizona. For example, retrofitting unlined landfills and chemical ponds with liners may be required because liners are commonly used. Cost and site-specific characteristics, as well as the age and size of a facility, can affect the selection of appropriate BADCT for a facility. Unlike some federal environmental protection techniques, BADCT can be tailored to meet the specific circumstances of a particular facility.

Individual permit applications must include hydrogeological studies of the discharge area. A.R.S. § 49-243(A). These may be expensive. An applicant must demonstrate that its discharges will not cause or contribute to a violation of water quality standards in the aquifer, or further degrade the quality of an aquifer that already violates the quality standard for a particular pollutant. A.R.S. § 49-243(B). For existing facilities, this standard is supposed to mean that existing discharges may continue if the application of BADCT does not eliminate them. New facilities, however, will have to meet very high quality standards for any discharges.

All aquifers in the state are initially classified by EQA for drinking water use, and must meet federal primary drinking water standards. (This means that the aquifer standard is that the groundwater must be clean enough to drink without treatment.) Aquifers and hydrologically isolated portions of aquifers can be reclassified by DEQ upon request to allow some degradation. However, the circumstances under which reclassification is allowed are so narrow that reclassification will seldom be possible.

Aquifer protection permit conditions must include facility design standards, monitoring and reporting requirements, contingency plan requirements (for spills or similar releases of pollutants), discharge limitations, a post-closure plan, and

designation of alert levels for various pollutants which, when exceeded, may require adjustment of permit conditions or cleanup. A.R.S. § 49-243(F). DEQ can refuse to issue a permit if it determines that an applicant is incapable (financially or otherwise) of carrying out the permit terms. A.R.S. § 49-243(I).

Aquifer water quality is measured at a "point of compliance," which is generally in the aquifer directly beneath the facility if hazardous pollutants are involved, and which may be at or downgradient of the facility boundary if other pollutants are involved. A.R.S. § 49-244.

DEQ may issue general permits for classes of facilities or activities, such as urban runoff, storm sewers, silvicultural activities, and small septic tank systems. A.R.S. § 49-246. If DEQ issues a general permit, any facility in the class that meets all the permit conditions will be exempt from obtaining an individual permit. General permits will specify methods and practices, called "best management practices," that must be used by each facility to reduce discharges. DEQ's current proposed general permits were described above.

DEQ must adopt agricultural general permits containing best management practices for the application of nitrogen fertilizers and concentrated animal feeding operations. A.R.S. § 49-247(A). Agricultural best management practices may vary regionally, according to local conditions.

Agricultural pesticide control provisions of EQA require pesticide manufacturers to submit to DEQ by December 1 detailed information about the persistence and leachability of each pesticide used in Arizona. For certain pesticides that might pollute groundwater, the farmer/user or commercial applicator must file with DEQ a report of each use of any such pesticide by the Monday following the day of use. Pesticide dealers must file quarterly reports of all sales of pesticides. DEQ will also conduct field monitoring and testing to determine the potential for certain pesticides to pollute groundwater and may halt sales of polluting pesticides.

EQA also contains provisions very similar in scope to the federal Superfund program. The DEQ may require or perform cleanup of hazardous substance releases. The owner or operator of a facility must notify DEQ immediately when it has knowledge

of a release of a hazardous substance from the facility in a quantity greater than or equal to the reportable quantities established under Superfund or by DEQ. This reporting requirement also applies to all releases that occurred before passage of EQA, but were not reported to the Environmental Protection Agency ("EPA") before August, 1986.

The state Superfund provisions apply to past spills as well as recent ones, and impose joint, several and strict liability on owners and operators of facilities. The 1987 statute abolishing joint and several liability in tort actions does not abolish such liability for actions relating to hazardous wastes or solid waste disposal sites. Laws 1987, Ch. 1, § 2.

The concept of "facility" in EQA's reporting and cleanup provisions is very broad. It can include, for instance, land on which a hazardous substance (such as a pesticide, gasoline, or solvent) was spilled or buried. Thus, if your business owns or purchases any land that has been contaminated by a hazardous sustance, you may have to report it to DEQ and clean it up. This makes it important to investigate any land you are considering purchasing for evidence of problem areas such as old landfills or dumps, dry wells, pesticide handling areas, and the like. Like the federal Superfund law, EQA may impose liability for cleanup costs on a bank or other lender that becomes the owner of a property through foreclosure proceedings. Unlike Superfund and the laws of some states other than Arizona, EQA does not impose any liens on contaminated property to secure cleanup costs.

EQA has a unique limited defense against cleanup costs for an innocent purchaser of realty that is later found to have a hazardous substance problem. The defense does not apply if the purchaser knew or reasonably should have known of the problem at the time of purchase. EQA also has a narrow defense for farmers for the application of pesticide products registered under FIFRA (the federal pesticide registration law) and applied according to label requirements.

EQA has strong civil and criminal sanctions and expressly authorizes citizens to sue to enforce its key provisions. A.R.S. § 49-264.

Other Laws

The 1986 legislature passed two other important environmental statutes. The first requires the owners of all existing

dry wells, except dry wells used for golf course maintenance, to register the wells with DHS. A.R.S. § 36-1891 et seq. We have copies of the registration forms and copies may also be ordered by calling DHS at 257-2270. There is currently no deadline for the registration of existing wells. The statute requires DHS to promulgate regulations governing the design, construction, performance, location, inspection and closure of all new and existing dry wells. New dry wells can be drilled only by drillers licensed by DHS. DHS anticipates having a draft of its new dry well rules ready for public comment in July.

The second major 1986 law created detailed regulation of underground storage tanks used for petroleum products or hazardous substances other than those regulated under RCRA (which regulates generators of hazardous waste and hazardous waste treatment, storage or disposal facilities). Beyond the requirement that all such tanks be registered with DHS, the statutes require each owner and operator of a regulated tank system to use some form of leak detection system; to immediately report to DHS most leaks or other releases from the tank system; to take corrective action when leaks are detected; to properly close the tank system when it is taken out of service; and in certain circumstances, to demonstrate financial ability to fulfill such obligations. DHS can be expected to adopt regulations to implement this law similar to the controversial regulations recently proposed by EPA. The EPA regulations include, among other things, a requirement that tank owners maintain insurance or other assurances of spill cleanup funds in a minimum amount of $1 million.

This summer, the legislature is slightly modifying EQA. How to fund the state Superfund (the "WQARF," a revolving fund for cleanup actions undertaken by DEQ and for other EQA purposes) was left unresolved last year. Measures under consideration include a tax (possibly more than $2.00 per acre foot) on all groundwater withdrawn within the state; a 5 per cent tax on environmentally hazardous household products, such as drain cleaners, detergents, pesticides, oil and paint; agricultural pesticide brand registration fees; a $35,000 tax on industrial discharges to public sewer systems; and assorted taxes on landfills, on hazardous waste handlers, on underground storage tanks, on commercial fertilizer licenses, and on municipal water use.

A "technical corrections" bill will transfer jurisdiction over the dry well and underground storage tank programs from DHS to DEQ.

The legislature is also considering major new air pollution legislation to meet federal clean air act requirements.

Part III. Status of Pending and Proposed Regulations.

DHS is rapidly developing regulations to meet many deadlines EQA imposes for the promulgation of regulations. During April and May, there will be several public meetings involving rules for the determination of aquifer boundaries and the classification of aquifers; aquifer protection permits; pesticide regulation; and BADCT guidance for wastewater treatment plants, mining operations, and landfills. DHS hopes to complete rules for the state WQARF, aquifer boundaries, pesticides, remedial action and aquifer protection permits this year, with the other necessary rules to follow within the next two years.

Certain aspects of the proposed and pending rules, even on seemingly innocuous technical subjects such as the designation of aquifer boundaries, may be very important to your business. For example, DHS originally proposed to establish aquifer boundaries in a manner that designated the entire surface of the state of Arizona as overlying an aquifer. Yet many portions of the state (such as some hilly and mountainous areas and portions of the Colorado Plateau region of northern Arizona) are not underlain by aquifers or are underlain by aquifers that are protected from surface pollutants by impermeable rock or soil layers. While discharges from an industrial plant or other facility located in such an area might eventually reach surface water or an aquifer, certain discharges from such facilities might not have any reasonable probability of reaching such water. Under the proposed regulations facilities that otherwise would not need a permit would be subject to the permit requirement. DHS has relented somewhat on this issue, but still interprets EQA very broadly and concludes that, because discharges from virtually any facility located anywhere in Arizona have a reasonable probability of eventually reaching an aquifer, they require a permit.

As another example, the draft aquifer protection permit rules establish class exemptions and general permits. An exemption or general permit is desirable to reduce the expense of

complying with EQA and to eliminate the need for an individual aquifer protection permit. DHS currently proposes to establish only four class exemptions and six general permits (described in Part II above). Many other classes of facilities may be able to obtain exemptions or general permits by lobbying DHS.

DHS is also beginning to develop BADCT for various industries. The BADCT chosen for a class of facilities may dramatically affect the cost to each facility of the permit program.

DHS is also struggling with the formulation of water quality standards. EQA allows the use of both numerical (i.e., "100 micrograms per liter") and narrative (i.e., "no significant threat to human health") standards for aquifer water quality. The use of narrative standards will increase the uncertainty whether a facility is in compliance with EQA and will give DEQ considerable discretion to determine that a facility is violating a standard. It will also greatly increase the possible range of regulated substances, because the current list of substances for which EPA has adopted numerical primary drinking water standards is very small.

A final current regulatory issue (of importance to farmers) involves the identification of pesticides that might pollute groundwater. DHS recently proposed a list of approximately 80 such pesticides, any use of which will require additional reporting by users. The list is subject to criticism because it has not been prepared following the statutory procedures. Also, it includes some pesticides the use of which is now banned, other pesticides that are not used in Arizona, and still other pesticides that may not present an environmental threat because Arizona soil compositions, temperatures and precipitation amounts differ from those used by EPA in identifying the hazardous pesticides from which DHS prepared its list. There has been much discussion at recent public hearings that only 5 or 10 pesticides, and maybe none, are presently appropriate for the additional reporting requirements.

Part IV. Your Participation in the Regulatory Process.

If your business may be affected in any major way by the new laws, it is very important that you stay abreast of the regulatory developments and submit your comments on those developments that may affect your facilities. DHS lacks the technical expertise, in many areas, to determine reasonable and appropriate BADCT or discharge limitations for various industries. DHS personnel tend to lack the practical experience and

concerns of businesspersons about matters such as streamlining the permitting process and avoiding unnecessary costs and delays. Finally, in those areas where DHS appears to interpret EQA so broadly as to expand its powers beyond the letter or spirit of EQA, public input is needed to make sure that DHS adheres to the limits of its authority and incorporates those limits into its regulations. This will help keep DHS from following its proven tendency to expand, gradually and informally, its interpretation of its authority even without statutes or regulations to support its interpretation.

To monitor EQA developments effectively, I suggest that you designate one person in your organization for the post. I would be happy to help any person you may designate get involved in the public review process.

If it appears that the cost of the new regulations to your business justifies the employment of technical experts from within or outside your firm, I strongly recommend that you have such persons review the relevant draft regulations for you. Many EQA issues cannot be adequately resolved without technical expertise, and it has been apparent during the regulation drafting process so far that expert comments from regulated industries and environmental professionals are very important in swaying DHS on important issues.

Finally, you may want to consider lobbying the legislature on issues such as the WQARF (Superfund) tax. We would be happy to be of assistance to you in this area as well. Jay Moyes of our firm is currently involved in water rights and water use lobbying efforts. Jack LaSota, who was Governor Babbitt's Chief of Staff for several years through mid-1986, and Andy Hurwitz, who preceded Jack, have many useful contacts in state government and are currently involved in diverse legislative lobbying efforts.

Part V. Conclusion.

Even though this letter is somewhat lengthy and complicated, it only begins to describe the sweeping changes now being made to the Arizona environmental regulations. These changes call for your prompt and close attention. They will significantly affect a myriad of business activities in Arizona and will substantially increase state government involvement in environmental protection.

I will be happy to discuss any particular concerns that you may have about how the new laws apply to your business. I would also be happy to coordinate with you or someone in your organization so that you can keep up with the new regulatory developments and provide meaningful input into that process.

I note for your information that the Arizona State University Center for Environmental Studies is sponsoring a "trade fair" for waste generators on May 19, from 8:00 a.m. to 8:00 p.m. at Mesa Centennial Hall. Admission is free. The fair will feature exhibits and demonstrations by Arizona companies that provide services to generators of wastes, and will include workshops on hazardous waste manifests, placards, and similar subjects. If your company generates hazardous waste, this may be a good opportunity to learn more about the services available to it and the companies that provide them.

Please feel free to call me with any questions you may have.

Very truly yours,

Jeffrey C. Zimmerman

JCZ/lh

COCHISE SILVER MINES, INC.

MEMO

TO: DUSTIN ESCAPULE
FROM: GARY LINDROOS
REF: ADHS INSPECTION (INSPECTORS: MR. ANDREW RENDES, MR. JOHN BEST)
DATE: JUNE 24, 1987

TIME: 11:45 A.M.

Showed Mr. Rendes and Mr. Best around entire property to include, plant, lab, and smelter areas. Wells #1,2,3. Old lab building, Reservoir, Contention and Grand Central Pits, and leached tailings dump.

Mr. Rendes asked me if we were bringing cyanide onto the property and he questioned the water at east side of Impound area near roadway.

Mr. Rendes suggested we contact Hazardous Materials Division of ADHS and get procedures to remove old cyanide drums off the property.

Memo
24 June 87

To: Dustin Escapule
Fr: Gary Lindroos
Re: ADHS Inspection

Inspectors: Mr. Andrew Rendes
Mr. John Best

Time: 11:45 A.M.

Showed Mr. Rendes and Mr. Best around entire property to include, Plant, Lab and smelter areas, Wells 1, 2 & 3, Old Lab building, Reservoir, Contention and Grand Central Pits. ~~Tailings Pile~~ and Leached Tailings Dump.

Mr. Rendes ~~questioned~~ asked me if we were bringing cyanide onto the property and he questioned the water at East side of Impound area near Roadway.

Mr Rendes suggested we contact Hazardous Materials Division of ADHS and get procedures to remove old cyanide Drums off the property.

FOR DUSTY

Notes from State Meeting 6/24/87

6/24/87

pre-DHS meeting, at NEHWOM

Mercury issue: tests show mercury in the tailings

lowest mercury is at the point of removal from the carbon towers

mercury testing was only initiated since the permit was issued

resin beads will remove mercury

- Well N°-2 is only well showing mercury now
- early (pre-permit) testing was not made for mercury - just cyanide and nitrate -

Meeting Agenda at DHS:

1. inspection of 6/22 } we want to raise up front
2. mercury test issue
3. renewal of existing permit
4. larger scope of permit

expansion of existing impound area
expansion of lined pond

000055

6/24/87 @ ADHS re Cochise Silver Mine

Debra Daniel
Mike Leach
Rob Larson
Jim Curlett
Roger Kennett
John Rampe
Nancy Jamieson (AG's)

JIM
Melissa Magini
Frank Magini
Benton Ledbetter
Ray Harper

Roger started out talking about "new permit"
Jay interjected re "Renewal":
Renewal, in ADHS' view is a minor modification
not requiring the 180 advance notice
near Reg would not be in effect as to existing permit
but... new Reg might be in effect as to new
(Full scale permit)

Well No 2 mercury problem:
— could be coming from Mercury below the lining old
tailings, which was mobilized by the cyanide leaking
through the old pond
or
it could be coming "naturally" from Well No 2

Mercury by Mother Nature
Nothing can be done about it.

6/24/87 cont.
(8.2)

Which ionic form the mercury is in will determine what remedies would be useful in removing it. If it is in several forms it will be tougher to get it out

Roger & Frank:
Another option: ① If the cyanide level is low enough in well 2, and ② the mercury is determined to be occurring "naturally" then... we could, in compliance w/ existing permit, cease pumping of well no 2.

Jim: All other wells in the area don't even show threshold levels of mercury

Inspection issue: a phone call came in "bringing "chemicals" into the site in drums
DHS sent inspector out to ascertain no cyanide was coming in, etc.

New Application Issues:
1 – where is the mercury coming from and what can be done about it
– we can use wells 1 and 3 (now ok) and avoid use of well 2

We are going to have to address that in detail and provide mitigation measures

(6/24/87 cont.)

Geology analysis is going to be necessary
- hydrologic geology
- mineral geology
- relationship, depths, etc. of workings

(old workings, shafts, etc. and how workings might be affecting <u>water</u> <u>movement</u>

Presumption is a very flat water table - but we need better handle on the movement of the water, and where the contamination is coming from and going toward

Water sampling from old shafts & tunnels

<u>Application</u>

~~compile~~ ~~evalu~~ identify ~~the~~ existing sources of data

then... the proposal should suggest measures to be taken to deal with the mercury problem

Weakest area of information re water movement is the direction of the main gate (to the NE)

Need to find out if there is any well drilling data or old holes or attempts in the area

The existing casing in well 2 is either 4 or 6" - probably 6

In the new permit we are going to, likely, have to put in at least one additional test / monitor well

000058

acceptable
Mercury level in soil? — Jim is not sure, but will check into that and let Peterson know

Sampling locations & stations should be identified on a map

Jay do letter
* → ADHS requests that we continue to pump the well No 2, to attempt to contain the mercury from moving further underground

Permit Modification — 2' or 5' sampling frequency
- will be a minor modification
we will send a letter requesting it
* Jay do letter →
(possible change of this approach is discussed later, next page)

Any other categories of concern?

The proposal does not have to address the actual design of the "mill" — just general conceptual diagrams

Issue: "closure" completion of "existing" permit, either as a wrap-up of the existing permit, or integrate into the new permit

either approach is acceptable to ADHS,
(probably preferable to do it as part of the new permit)

Q: should we have to sample, at all, the "imported" materials? (as opposed to the base materials

Conclusion:

we will go to 5' and sample at that point and that will be approved as a "minor modification"

Design Theory for existing cyanide leach operation: some move the tailings off-pad (post rinsing) some keep the material on pad permanently

clay base + leak detection system + hypalon or other material (PVC) under non-exposed areas (thinner lining acceptable

— The monthly sampling "overright" issue: a letter has been issued, and we will see that

— 6/22 inspection: Roger will report any problems

— Old barrels: Roger still wants them removed to approved landfill

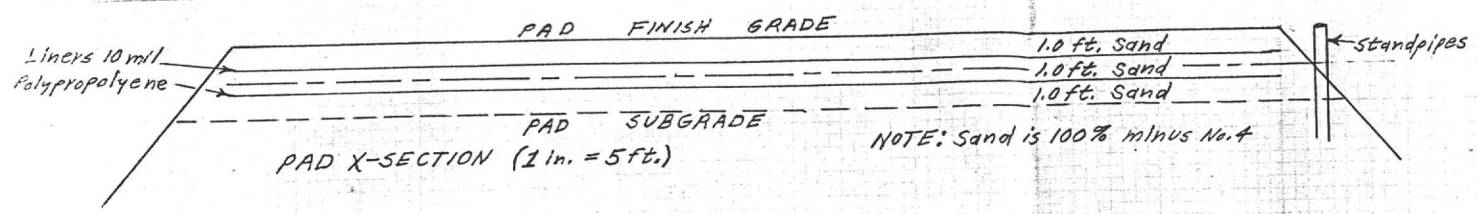

PAD X-SECTION (1 in. = 5 ft.)

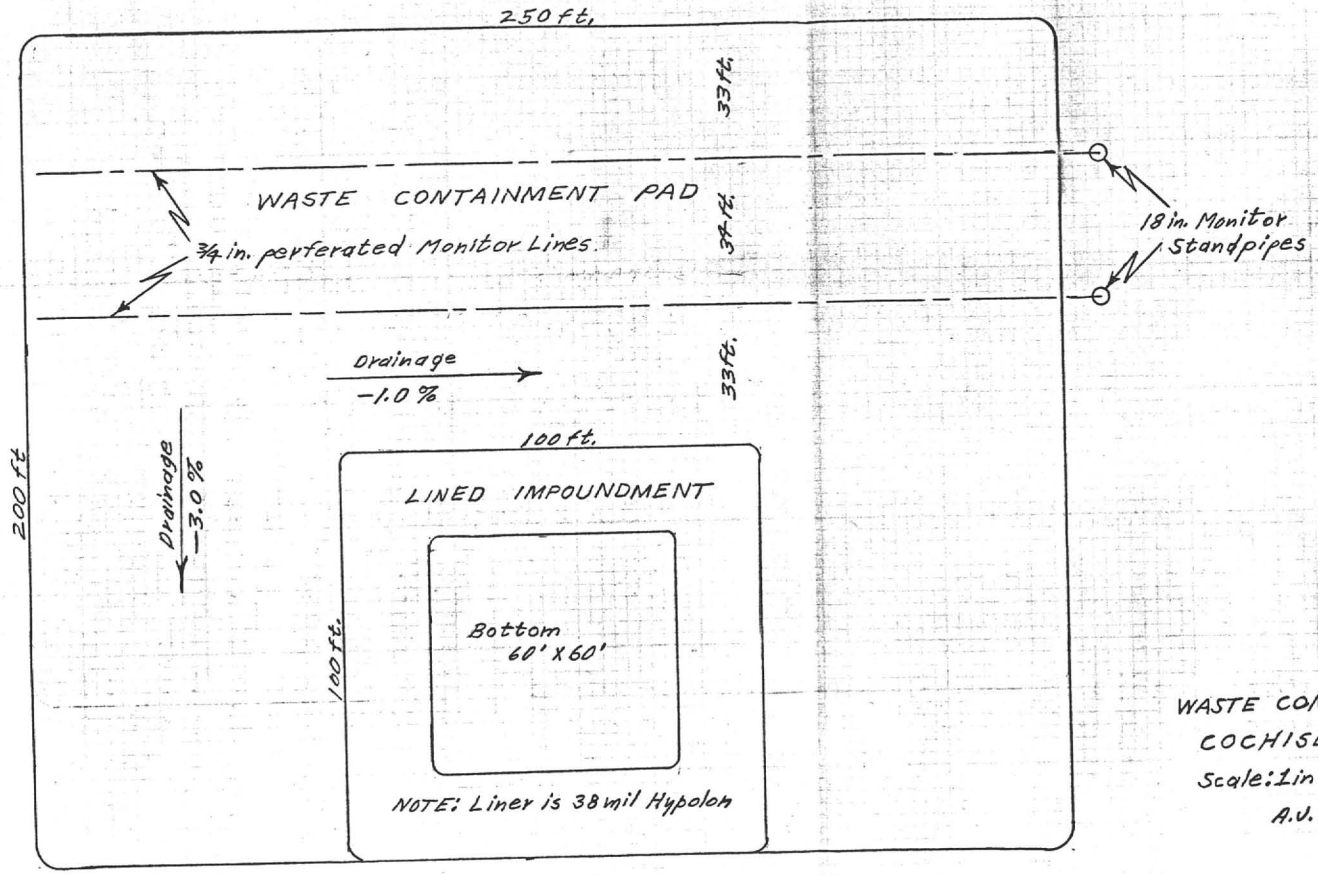

PLANT AREA

WASTE CONTAINMENT FACILITIES
COCHISE SILVER MINES, INC.
Scale: 1 in = 30 ft. July, 1987
A.J. Graves, P.E.

130000

ARIZONA DEPARTMENT OF ENVIRONMENTAL QUALITY

Inter-Office Memorandum

July 1, 1987

TO: James A. Maston, P.E., Manager
Southern Regional Office

FROM: Andrew M. Rendes
Southern Regional Office

RE: Site Visit to Cochise Silver Mine, Inc.
Tombstone, Arizona

On Tuesday June 23, 1987 a site visit was made at Cochise Silver Mines, Inc. in Tombstone, Arizona, as a response to citizen requests and as a part of our agency's ongoing overseeing of mine activity.

John Best and I initially spoke to Messrs. George Kruse, Alex Gradillas, and Joe Perotti of the City of Tombstone regarding concerns expressed to them.

John and I then went to the mine site proper and spoke with Mr. Gary Lindroos, the chemist. The three of us walked through the area where the already-leached tailings are being washed. There was no evidence of any cyanide being added to any of the material. Larger and additional processing and recovery units are on site, but the equipment is for removing, concentrating, and recovering the residual gold and silver from the already-leached material. We then drove through other areas of the property. In a back area of the mine, we found a site where a large number of blue barrels were crushed and made unusable. These barrels were used for the importation of the Sodium Cyanide. In other areas of the property, other colored barrels were found. Looking in the barrels revealed they contain oils or greases used for lubrication. There were green colored barrels at the smelter site with alcohol labels. Mr. Lindroos said the alcohol was used in prior processes.

John and I stopped at the Mayor's business office and informed him of our findings.

CC: Cochise County Health Dept.
Roger Kennett, DEQ
Alex Gradillas, Mayor, Town of Tombstone, P.O. Box 339, Tombstone 85638
Dustin Escapule, Cochise Silver Mines, P.O. Box 158, Tombstone 85638

ADEQ ADM Stock (Rev. 4-87)

COCHISE SILVER MINES, INC.

22 July 1987

MEMO

TO: Mr. Dustin Escapule
FR: Gary Lindroos
RE: Inspection and Sampling by ADHS

At approximately 1015 hours this date Mr. John Best of ADHS Tucson visited the property. He was accompanied by Mr. Juan Alegria of the Cochise County Health Department.

Mr. Best sampled Well No. 2 and asked to see the operation from the top of the Tailings Dump. While there, I explained the operation and how we were handling the tailings from the impound area.

Their visit was concluded at approximately 1100 hours.

Respectfully Submitted:

Gary A. Lindroos

cc-Mr. Roger Kennett ADHS, Phoenix
Mr. Andrew Rendes ADHS, Tucson
Mr. Ray Harper

ARIZONA DEPARTMENT OF ENVIRONMENTAL QUALITY

EVAN MECHAM, GOVERNOR
Gerald Teletzke, Ph.D., Director

August 18, 1987

Mr. Dustin Escapule
Cochise Silver Mines, Inc.
Post Office Box 158
Tombstone, Arizona 85638

Dear Mr. Escapule:

RE: Cochise Silver Mines, Inc.
Groundwater Quality Protection Permit No. G-0011-02

Based on my site visit of August 7, 1987, there are several facility deficiencies and/or misunderstandings which need to be addressed.

"Approval" is defined on page 9 of your permit as meaning "approved in writing by the Director." Please note that any request for modification to a facility must be in writing. Any requests for modification should be submitted to, and approvals made by the Water Permits Unit. Inspections to determine compliance with approvals and permit conditions will be performed by the Southern Regional Office.

Our records reflect that no written request for any expansion of the impoundment area has been made. The impoundment area I observed on August 7, was constructed with liner materials which are not in accordance with permit conditions. Since this was at least partially due to an apparent misunderstanding, the first expansion may remain as is, provided that no new material is stacked on this area. In order to receive approval for the current expansion, you must submit a request and attach detailed engineering drawings indicating the phases of impoundment expansion, including installation dates and materials used. The present expansion may proceed after request and approval with the installation of 36-mil thick Hypalon liner, over the present installation, seamed by manufacturer's approved methods. The seams shall be tested in the field by ASTM method D-413 in the presence of a Department representative from the Southern Regional Office. This liner should be tied adequately to the material underlying the first expansion so as not to allow fluids to penetrate at this junction.

The leak collection system monitoring points (the two standpipes) are difficult to inspect. This could preclude regular inspection. Please explain how the monitoring effort is to be accomplished or how this deficiency is to be corrected.

000064

The Department of Environmental Quality is An Equal Opportunity Affirmative Action Employer

Central Palm Plaza Building 2005 North Central Avenue Phoenix, Arizona 85004

Please submit the requested information to this office no later than September 14, 1987. If you have any questions, please feel free to call.

Sincerely,

Roger Kennett

Roger Kennett
Water Permits Unit

RK:mm

cc: James Maston, Southern Regional Office
Jim Curlett, Compliance
Jay Moyes
Ray Harper
Frank Magini
Juan Alegria, Cochise County Health Department

COCHISE SILVER MINES, INC.
P. O. Box 158
Tombstone, Arizona 85638

August 18, 1987

Mr. James E. Curlett
Arizona Department of Environmental Quality
Water Pollution Compliance Unit
Central Palm Plaza Building
2005 North Central Avenue
Phoenix, Arizona 85004

Dear Mr. Curlett:

Per our telephone conversation of this morning, we request approval to remove the washed tailings from the Impoundment Area to the North end of the Houghton Pad (approved by Martin Engineering).

Smith and Smith Laboratories has analyzed the tailings we submitted and has confirmed all samples to be below their detection limit of 0.01 mg/Kilogram Total Cyanide.

If you have any questions, please contact me at 457-2282. Thank you.

Sincerely,

Gary A. Lindrdos
Assayer/Chemist
Cochise Silver Mines, Inc.

Rec 9 Nov 87
10 am
JRS

Frank Magini
2406 W. Tuckey Lane
Phoenix, AZ 85015
October 30, 1987

Board of Directors
PBR Minerals, Inc.
P.O. Box 32040
Phoenix, AZ 85064

Gentlemen,

I visited the Tombstone mine site on Monday, October 26, 1987, due to a commotion caused by certain people in the employ of PBR Minerals. My investigation at the mine site included the observation of certain "management personnel" on site; however, one of these persons involved was not on site. The commotion caused was not the first occurence of harassment and/or retaliation of female employees and possibly others that had been brought to my attention and which I would like to address now as well as other irregularities which have been occuring at the mine.

First of all, I have brought these incidents of harassment and retaliation to the attention of the members of the board of directors of PBR Minerals, Inc., namely, Peter Lendrum, Jr., Benton Ledbetter III, and Raymond Harper, verbally on several occasions. However, these problems have always been passed off inconsequential. I find this lax attitude extremely irritating considering the severity of these claims. During my investigation at Tombstone on October 26, 1987, I found that at least one board member, Benton Ledbetter, had personal knowledge of harassment several months earlier and nothing was done to properly handle the matter then. Considering the severity of the claims, I would like to set the record straight on my position and will state my recommendations regarding this matter.

As I stated earlier, my trip to Tombstone was precipitated by a commotion caused by certain people in the employ of PBR Minerals, Inc. And when I arrived at the mine site on Monday, October 26, 1987 , Benton Ledbetter, apparent chairman of th e board of directors for PBR Minerals, Inc., had already flown in from Phoenix. I stated at this time to both Benton Ledbetter and Jack Schissler, the supposed manager of the mine, that Dusty Escapule, sr. should be immediately relieved of his duties at the mine due to severe employee relations problems. I also let it be known that I recommended that Les Bowyer's position needed to be re-evaluated fo r the same reasons and that he also should be immediately relieved of his duties at the mine. I do not believe that Jack Schissler, the supposed manager of the mine, is capable, or else he does not have the desire or authority to get involved in the problems at hand to take proper action.

I want to make it clear that I, Frank Magini, as a member of the board of directors for PBR Minerals, Inc., do not approve of the management policies of the board. Furthermore, I adamantly and vehemently disapprove of the general management at the mine and the direction that this mining operation has taken since January, 1987. Our agreement (see exhibit A) of July 20th, and signed by Benton Ledbetter, and Ray Harper, on September 16, 1987, is proof enough of my concerns of the management and personnel of the mining operation. I, Frank Magini, President of Cochise Silver Mines, Inc., agree that I did allow payroll to be made on Cochise Silver Mines' payroll account pending PBR Minerals setting up their own payroll account, and that the monies to pay the payroll came from largely Ray or Linda Harper's personal bank account, from the account of PBR Minerals, Inc., and some monies came from the sale of metal, monies which were controlled and dispersed wholly by Raymond Harper. Cochise Silver Mines has not contributed any monies other than the sale of metal and has contributed only the use of equipment that Cochise Silver Mines owns. This equipment was bought with joint venture capital, primarily with checks written on Ray or Linda Harper's account and with monies furnished by Benton Ledbetter.

As President of Cochise Silver Mines, Inc., my name, Frank Magini, is on the Groundwater Quality Protection permit, and I had every intention of proceeding to run the tails pile and doing the dean up at the mine site according to the 1986 plan of operation which was submitted to the Department of Environmental Quality. Everyone involved with this planning had every intention of using an environmentally clean system that would produce no slimes whatsoever. This process has not been followed and numerous problems have arisen as a result of this. The original clean up procedure had been satisfactorily proven to me in a lab test by engineers. All this was disregarded when Ray Harper made the statement in early January, 1987, that it was his money and he'll spend in in his own way. It bacame apparent then that Ray Harper and Dusty Escapule, sr. had become the managing and spending partners. I resisted and agued vociferously in every way possible, but was overruled each time by Ray Harper saying it was his money and by Benton Ledbetter saying he wasn't able to write any checks. Since this time I have not been directly involved with nor consulted about any decisions regarding personnel, management, or anything in connection with the mine. Although I have been present at dozens of meetings and have tried to impress upon Ray Harper, Benton Ledbetter and Peter Lendrum, the importance of the state permit and the clean up, I have gotten nowhere with them.

At that meeting in January, on the 10th to be exact, I asked for money to purchase such equipment and money for installation and labor to install a filter belt. I estimated 60 days or until the 10th of March to have the filter belt in operation. Ray Harper said absolutely not, that in 60 days he would have an operating mine and the clean up done.

At this point in time, much to my disgust and dismay, that although the pilot plant is operating, and only at 60% of capacity, it is producing an

engineer's nightmare of slimes on the site. This was not and is not my projection of any environmentally clean system. And as of October 26, 1987, the clean up has made very little progress. There has been some staking done, two dozer trenches dug at 4' deep, 140' long and this material has been tested, according to the lab manager and head assayer, Gary Lindroos. There is supposedly another machine, a scraper, being brought onto the site to facilitate the clean up.

Because of the great amount of slimes being produced by the present "pilot" plant, additional costs have been incurred to build and line larger settling ponds. This had to be done at the request of the Department of Environmental Quality, water permits unit, to effectively handle the slimes, I have been told.

As of October 26, 1987, PBR Minerals, Inc., is now carrying the payroll and will pay it out of its own bank account. PBR Minerals has had plenty of time to apply for and receive its state and federal id numbers, severance tax number, resale number, have its own industrial insurance, general insurance and a two million dollar umbrella liability policy.

Originally my two partners in this joint venture were Peter Lendrum, Jr. and Benton Ledbetter II. They were to supply the financing, and I would be the manager of the mine and put everything together. In other words, they were "silent partners" since they did not know anything about mining. Our association was on a very good level from March, 1986, through the end of the year. They were going to fund the operation up to $250,000.00. At the time that Cochise Silver Mines got its Groundwater Quality Protection permit, approximately half of the original funding for th e mine had been spent. Right about this point in time Peter and Benton brought in Ray Harper to provide additional funding. No real funding was made, however, but Ray Harper would say, "go ahead and charge it and I'll pay the bills." I have a letter signed by Ray Harper that says he is personally responsible for all of Cochise Silver Mines' bills (see exhibit b). Cochise now has bills totalling over $157,000.00 , some of which are several months overdue. My recommendation is to get the bills paid and concentrate on getting the clean up work done. Third, an assessment of the present completely inefficient slimes producing system needs to be done. There is a dire need for an environmentally clean system to be put into effect. The most important matters at hand, however, are the problems between management and labor and employee relations. Should the complaints that I've heard be taken to the labor relations board, serious consequences will follow.

Sincerely,

Frank Magini

Frank Magini

cc: Peter Lendrum, Jr.
Benton Ledbetter II
Raymond Harper
Jack Schissler

FM: mm

4-27-88

PBR MINERALS, INCORPORATED

PRESS RELEASE

TOMBSTONE, ARIZONA. PBR Minerals, Inc. announced the completion of the excavation and processing of the materials removed from the old ponds constructed by the former lessee. PBR has ceased operation of its pilot scale plant and intends to apply for a permit for a full scale operation. Mike Ashworth, Administrator, says, "We are confident that we have eliminated the source of contamination of one of the private wells on the property."

PBR will begin final testing and closure of the cleanup operation while awaiting action on its new permit. It is the intention of management to rehire as many of the workers as possible who participated in the cleanup operation when the new operation begins.

FOR FURTHER INFORMATION, CONTACT J. MICHAEL ASHWORTH AT 457-2282.

3104 EAST CAMELBACK RD.
SUITE 603
PHOENIX, ARIZONA 85016
PHONE 602/457-2282

PBR MINERALS,
INCORPORATED

MEMORANDUM

To: All Employees

From: J. Michael Ashworth
Administrator

Date: April 28, 1988

Re: Temporary Plant Closure

As of this date, April 28, 1988, PBR Minerals, Inc. has completed the necessary excavation and cleanup anticipated in our Groundwater Quality Protection Permit. As many of you know, our total operation has been functioning under the guidelines of this Permit, and with the completion of the cleanup, we can no longer continue to operate the plant.

We are in the process of applying for a new Heap Leaching Permit, which we anticipate securing within the next six months.

Your pay check for this week and a termination bonus will be available at the mine office on Wednesday, May 3, for you to pick up.

We sincerely appreciate the efforts and dedication of each and every one of you, and are hopeful that when we start up again, we can again continue the relationship that we have enjoyed in the past.

JMA:jab

3104 EAST CAMELBACK RD.
SUITE 603
PHOENIX, ARIZONA 85016
PHONE 602/457-2282

I 5/1/88

ARIZONA DEPARTMENT OF ENVIRONMENTAL QUALITY

AN MECHAM, GOVERNOR
GERALD H. TELETZKE, PH.D., DIRECTOR

Dear Sirs:

RE: Proposed Leach Operations

The Department of Environmental Quality was notified that your company is interested in constructing a cyanide leach facility in the State of Arizona. Cyanide operations are required to file a Notice of Disposal with the Office of Water Quality. If all requirements of the laws are met, a Groundwater Quality Protection Permit will be issued. Attached for your use is a Notice of Disposal Form.

To assist you in completing the NOD, the Department suggests the following design features to ensure that the facility is nondischarging:

1. The ponds (pregnant and barren), which contain cyanide solution, should be lined, first, with a geotextile fabric, followed by an impermeable layer. If it is a synthetic liner, then it should be 30 mils thick and u.v. resistant;

2. Ponds should be tested for possible leakage with fresh water before cyanide is added to the system (the water balance can be established using a pan evaporation test);

3. The pad liner should consist of, first, a geotextile fabric underliner, followed by a PVC liner (u.v. resistant for all surfaces exposed to sunlight). Depending on the site specific conditions, another layer of geotextile fabric may be needed covering the synthetic liner;

4. The pad must have a leak detection and collection system underneath the liner to monitor the presence of liner leakage;

5. The entire cyanide system should be designed and maintained in order to contain and protect it from inflows or failure due to a 100-year, 24-hour precipitation event; and

6. Groundwater monitoring may be required by the Hydrology Unit based on size, proximity to drinking water sources, depth to water, design of the system and the environmental sensitivity of the surrounding area.

If you have any questions regarding the rules and regulations or the permitting process, please feel free to contact this office at (602) 257-6806.

Sincerely,

William L. Vineyard
Water Permits Unit

WLV:mm
Attachment

000072

The Department of Environmental Quality is An Equal Opportunity Affirmative Action Employer

To: All Suppliers

From: J. Michael Ashworth,
Administrator

Date: May 17, 1988

Re: Accounts Payable

On April 27, 1988, PBR Minerals, Inc. completed the cleanup operation of our leased property in Tombstone, Arizona; thus, fulfilling the requirements of the State of Arizona. The cleanup operation and the processing of metals from the tailings were being conducted under the guidelines of the State issued Temporary Permit, thus eliminating our only source of cash flow.

PBR will be applying for a permanent heap leaching permit within the next four weeks, and we feel quite confident that within 5 months after our application is submitted, we will, in fact, begin our heap leaching operation. During the six-month waiting period, we intend to create a market and sell our by-product aggregate to the State, County and City municipalities, and to private construction entities, in order to provide a sufficient cash flow to pay our suppliers and meet our overhead.

We ask that you please bear with us during this transitional period.

Enclosed please find a proposed payout schedule. Thank you.

J. Michael Ashworth
Administrator

GEOCHEMICAL ENGINEERING
INCORPORATED

June 8, 1988

Mr. Mike Ashworth
PBR MInerals, Inc.
PO Box 370
Tombstone, AZ 85638

Dear Mike:

In the absence of the detailed topos and the results of the water-quality samples Gary and I collected, I have prepared several items for you folks to review and/or supply information. We will be expanding or completing several of these as soon as we receive the above items; meanwhile, I thought I'd send this material, in the interest of time. The following numbers correspond to the red numbers on the various items.

1. This draft "Notice of Disposal" needs your input on the items highlighted and your review of the answers I've supplied.

2. This is an outline of the "Application for a Ground-Water Quality Protection Permit" in the draft requirements. Note that Ch. 2 will require quite a bit of information on land ownership.
3. This is a rough draft of Chapters 4 and 5 of the Application (item 2, above). It will be expanded upon receipt of the water-quality data. Chapter 6 will say there is no anticipated impact, due to liners, clay attenuation, depth to water, and proposed use of a continuously-pumped monitor well. A separate report on the clay liner attenuation tests will be referenced here and included as a stand-alone appendix. Chapter 7 will propose such a continuously pumped monitor well, with water pumped to the Barren Pond. Chapter VIII will say pumping will continue, and Chapter IX will call for cyanide neutralization and post-closure monitoring.

I'd appreciate your review of this material as soon as reasonably possible. Most critically we need the data from the samples Gary and I took, as well as past data which Dusty said he was going to send. Please send that as soon as possible.

Very truly yours,
Geochemical Engineering, Inc.

Jim V. Rouse, R.G.

JFR/ldm

000074

274 UNION BLVD., SUITE 460 LAKEWOOD, COLORADO 80228 (303) 988-8902

(1)

NOTICE OF DISPOSAL

1. a. Facility Name: GRAND CENTRAL LEACHING FACILITY

b. Facility Location (List address or describe access by roads):

OLD BISBEE HWY, TOMBSTONE, AZ

County Cochise Zip Code 85638

Township 20S Range 22E Section(s) 11, 12, 13, & 14, ____ 1/4 ____ 1/4 ____ 1/4

c. Facility Manager: GARY LINDBERG

Telephone Number: 602-457-2282
(Area Code)

d. Owner's Name PBR Minerals, Inc.

e. Owner's Address 950 S Kylene Drive. PO Box 270
Tombstone, AZ 85638 ~~Zip Code~~

f. Landowner of the facility site: Lessor: Tombstone Development Co.
Lessee: PBR Minerals Inc

g. Facility's plan engineer/architect:

Name: Jim V. Rouse

Firm: Geochemical Engineering, Inc

Address: 274 Union Blvd, Suite 460
Denver, CO 80228

Telephone number: 303-988-8902
(Area Code)

Water Permits Unit
Revised 9/86

h. Type of Permit you are applying for:

area permit _____ individual facility permit X

i. Type of facility requesting permit:

new _____ existing X

2. a. Attach a topographic map (preferably a 7.5 minute quadrangle base), showing the geographic location of the facility(s) and all disposal locations. In addition, show the location of any existing groundwater withdrawal wells within the approximate vicinity (¼ mile radius) of the disposal area and identify the use of each well (i.e. industrial wells, drinking water supply wells, etc.). (If applying for an area permit as described in R9-20-211, indicate on the map the location of each facility and disposal location in the proposed permitted area).

b. List Latitude/Longitude of all disposal locations indicated on the attached map

Centered on 31° 42'30" N. and 110° 3' W.

3. a. Type of Facility(s) Precious-metal heap-leach facility, zero discharge, with spent ore left on pad.

b. Nature of Activity conducted at facility(s) Crushed ore is loaded on an impervious pad and leached with a dilute solution of sodium cyanide. "Pregnant" solution is treated for recovery of precious metals. Solution is then recycled. Spent ore is neutralized and left in place. All process ponds are double lined with leak detection systems. Area ground water is monitored.

c. List applicable U.S. Department of Commerce Standard Industrial Classification (SIC) Codes for above activities

1041 - Gold Mining

1044 - Silver Mining

*Began initial operation of site 9/79
Operations by present Co. 7/88
Anticipated Site Construction 11/88
3/89

4. Date Facility began/will begin operating

5. Expected Facility(s) Operational Lifetime 10 years

6. List any other environmental permits issued to the facility(s) (i.e. air quality permit, NPDES permit, hazardous waste permit)

Air Quality Permit to be Applied For

7. a. Describe disposal activities at the facility(s)

There is no surface or subsurface disposal. All process streams are recycled. All process-solution ponds are double lined, with a leak detection system, and with the lower liner being a composite membrane/clay liner shown to have ability to attenuate contaminants. Pad liner also underlain by clay. Spent ore is neutralized to destroy residual cyanide.

b. Describe any control measures and treatment processes designed and operated to protect groundwater quality from effects of the disposal

As noted in 7a, all process pads and ponds are lined with membrane liner and with clay liner capable of attenuating contaminants. Spent ore will be neutralized after leaching, to destroy residual cyanide. Pumped monitor well assures that should any leaks occur and reach ground water (highly unlikely) they would be detected, and could be treated.

c. Describe existing groundwater use(s) of the receiving aquifer(s)

Process water for existing wash plant and proposed leach plant taken from one of 3 existing wells downgradient of site. Town of Tombstone uses same aquifer as a supplimental source of supply, with a well located approximately miles from area of proposed activity

000077

d. Note depth to groundwater The water table elevation is approximately 4100', which is somewhat below land surface, depending on the elevation of the point of measurement

Source of data M.S. Thesis by Holliday, continued observation in Co. wells

Date of measurement 1963 and subsequent

e. If available, attach analytical reports for the ambient groundwater concentrations of the receiving aquifer(s) for those constituents listed that are contained in the disposal. Indicate source of data and date of sampling for all values listed. See attached table

8a. Identify the type(s) of waste(s) generated by each process within the facility. Be as descriptive as possible without listing specific constituents.

Wastes contain spent ore, neutralized to cyanide free cyanide. Residual pore water contains traces of heavy metals, cyanide complexes, and nitrate from cyanide degradation.

b. If available, attach analytical reports for the specific pollutants disposed by the facility. See attached report on attenuation of leach solution pollutants by clay subliner

c. Estimate the disposal schedule including the annual average in hours per day, days per year, and the disposal periods if the disposal is seasonal.

Hours/day 24 HRS/DAY

Days/year 365 DAYS/YR.

Seasonal Distribution of Disposal

d. Estimate the flow rate(s) of the disposal i.e. minimum, average, and maximum daily flow; mean annual flow; or mean, minimum, and maximum flow by season if disposal is periodic; or by whatever other units appropriate to the type of disposal.

Mined Tonnage per year 350,000

Solution circulation rate per 600 GPM

9. Describe any existing groundwater quality monitoring program(s) (attach supporting technical reports if available)

Three existing Company water-supply wells are monitored on a routine basis, as is the Tombstone water-supply well. A new monitor well will be drilled immediately downgradient of the facility, and will be continuously pumped to assure formation of a cone of depression and capture of any potential leakage.

10. Include any other data or information which, in the judgement of the owner/operator, demonstrates that the facility qualifies for a groundwater quality protection permit based on compliance with the criteria listed in R9-20-208.A. Use attachments if applicable (i.e. depth to groundwater, geology at the site).

Qualifying factors include: (1) lined ponds and pads, with contaminant-attenuation capacity in clay subliner, (2) neutralization of cyanide in spent ore, (3) depth to water table of approximately 500', (4) berming and lining of reagent storage and mix facilities (5) pumped monitor well which can detect and contain any contaminant migration, and (6) high surface evaporation rates

11. Certification:

"I certify that under penalty of law that I have personally examined and am familiar with the information submitted in this document and all attachments and that, based on my inquiry of those individuals immediately responsible for obtaining the information, I believe that the information is true, accurate, and complete. I am aware that there are significant penalities for submitting false information, including the possibility of fine and imprisonment."

Printed Name of Applicant

Title

Date Application Signed

Signature of Applicant

PROJECT PBR Minerals

SUBJECT Outline / Organization of "Application for a Ground-Water Quality Protection Permit"

BY JVR DATE 27 May '88 PAGE _____ OF _____

I Application Form

II Maps & Plans

A. Location Map - 7½" topo for 3 miles around site, with land ownership & location of wells

B. Site Plan - Property lines, buildings, borings &/or wells waste discharge sites, topography, etc.

C. Plans & x-sections of specific locations

III Summary of Disposal Activity

A. Waste Type

B. Rates

C. Mitigation

D Monitoring, w/ results.

IV Environmental Setting

A. Land Use

B. Climate (1) Precip, mean & annual (2) Evaporation, & (3) evapotrans.

V Site Hydrology

A. Geology (1) Surficial (geomorph, soils) (2) Subsurface (lithol) (stratigraphy, structure,

B. Hydrology (1) Surface water (2) Ground water (See Draft info for specifics required)

VI Discharge Impact Assessment

VII Monitoring Plan

VIII Contingency Plan

IX Closure & Post Closure.

4.0 ENVIRONMENTAL SETTING

The P.B.R. facility is located immediately south of the town of Tombstone, Arizona, in a portion of the Sonorian Desert. The general environmental setting is described in the following portion.

4.1 Land Use

The P.B.R. Minerals facility is located on the southside of the Town of Tombstone, approximately 75 miles southeast of Tucson and 25 northwest of Bisbee, Arizona, in the southwest quarter of Cochise County. The region is semiarid, and is used primarily for stock grazing, mining and recreational and tourism activities. Access is provided by means of Interstate Highway 10 to Benson and U.S. Highway 80 from Benson to Tombstone. The regional area is further accessed by means of various gravel roads, with unimproved ranch and mining roads generally passable, and providing access to nearly all sites.

Vegetation in the area consists of predominately desert shrubs and scattered clumps of grasses. Within the San Pedro River basin, creosote bush, tarbush, mortonia and whitethorn are common, with several varieties of grama, curly mosquite and tobosa grass near the mountain front. Mesquite and paloverde are common along the dry stream channels, while ocotillo, yucca and agave occasionally occur with the grasses (Hollyday, 1963).

Recreational and tourism activities developed largely ~~are a function of~~ due to the historic mining development which has occurred within and adjacent to the town of Tombstone. Tourism is assuming an increasing importance within the town. Mining activities are generally perceived as consistent with such historical tourism activities.

4.2 Climate

Tombstone, ~~occurring~~ situated at an elevation of between 4,500 and 4,600 feet, has a semiarid climate, with moderate winters and hot summers. Average maximum temperature is 76°, while the average minimum is 49° (Hollyday, 1963). Recorded extremes are a high of 110° and a low of 9°. Average annual precipitation at Tombstone over a 65-~~period~~ year period of record is 14 inches, with extremes of 7 and 28 inches. Precipitation is bimodal ~~in occurrence,~~ with approximately 70% of the precipitation coming during intense convective storms during the monsoonal season. ~~of~~ July, August and September. The remaining precipitation is distributed during the winter months, and is more general and gentle in nature.

Because of the semiarid nature of the area, evaporation and evapotransporation is extreme, ~~significantly~~ greatly exceeding the precipitation during the ~~annual season~~ year. Table 4.1 provides monthly and annual data on precipitation, pan and lake evaporation and potential evapotransporation. Such semiarid conditions, with a net evaporation, allow for the conduct of zero-discharge milling operations, with a

bleed stream in the form of the water incorporated into the interstitial voids of waste material.

5.0 SITE HYDROLOGY

The site hydrology in the P.B.R. Minerals area has been well de~~fined~~scribed by Hollyday (1963). The ~~bulk of the~~ following description is adapted from this source, together with modifications resulting from more recent drilling activities and excavations conducted by P.B.R. Minerals and its predecessors.

5.1 Geology

The geology of the Tombstone Mining District has been examined in detail with respect to both general and economic geology. One of the first studies of the general geology and ore occurrence was prepared by W. P. Blake (1882) in response to mine litigation. Blake subsequently published additional general reviews of geology and mining development in 1902 and 1904. J. A. Church (1903) published a report on the regional occurrence of ore deposits and the general geology, which incorporated local stratigraphic names.

Dr. F. L. Ransome (1920) published a comprehensive study of the geology of the surface and subsurface of the Tombstone Mining District, and introduced the type stratigraphic names as utilized in the Bisbee District. This work was continued and carried to completion by B. S. Butler, E. D. Wilson and C. A. Rasor (1938) in a description of the geology and the occurrence of ore in the central portion of the Tombstone Mining District.

James Gilluly, J. R. Cooper and J. S. Williams (1954) conducted a detailed study of the Pennsylvanian-Permean stratigraphy in the adjacent Tombstone Hills, and ~~subdivided~~ upgraded Ransome's Naco Formation into a Group, which they subdivided into four ~~smaller~~ formations. Gilluly subsequently conducted a regional study of the stratigraphy and structure in the Tombstone Hills, Dragoon Mountains and the northern half of the Mule Mountains (1956).

5.1.1 Surficial Geology

Soils within the P.B.R. Minerals area are generally thin and discontinuous, and are formed by the in-place weathering of bedrock with occurs at or very near the land surface. Soils tend to be rather coarse-grained in nature, reflecting such mechanical weathering, and are generally of low plant productivity.

Alluvium occurs in the northeastern corner of the Tombstone Mining District, and is composed largerly of coarse sand and gravel, ~~and~~ which in many locations is cemented with caliche deposits to depths as great as 90 feet (Hollyday, 1963). The alluvium thickens to the northeast and east of the town. ~~with~~ Here, the upper 30 to 90 feet of alluvium ~~most~~ is predominately composed of limestone pebbles and cobbles derived from Palezoic carbonates and cemented with caliche. Below this layer, the alluvium is unconsolidated to moderately well-indurated gravel composed of ~~pebbles~~ fragments derived from shales and sandstones of the Bisbee Formation. This gravel has a maximum thickness of between 45 and 120 feet. The lowest portion of the alluvium consists of a gravel layer

which is unconsolidated to weakly cemented, with a maximum known thickness of 300 feet. This lower-most layer is composed primarily of a mixture of gravel and sand derived from the Bisbee Formation and from quartz latite volcanics. A well, drilled approximately one mile east of Tombstone, encountered the water table in the alluvium at a depth of approximately 455 feet, but caved before it could be pumped to determine the water-bearing properties of the alluvium. Hollyday (1963) presents information that indicates the water table in the alluvium is interconnected with the water table in consolidated bedrock, where the alluvium ~~is~~ receives sufficiently ~~thick to allow development of a water table~~ recharge to be saturated. Alluvium is absent or only rarely present in the P.B.R. Minerals site.

5.1.2 Subsurface Geology

The Tombstone Mining District is underlain by a thick sequence of intrusive rocks and Precambrian metamorphics, ~~rocks,~~ Paleozoic clastics ~~rocks~~, Paleozoic carbonates, the Bisbee formation and volcanic rocks. ~~These are each described in more detail in the following section.~~

Intrusive and Metamorphic Rocks: As noted by Hollyday (1963) "the intrusive rocks and Precambrian metamorphic rocks consist of three generalized geologic formations: Precambrian intrusive and metamorphic rocks, Triassic-Jurasic intrusive rocks, and Tertiary intrusive rocks." The Precambrian intrusives consist of albite granite, quartz diorite, gneissic granite, and saussuritic quartz diorite. In

general, these rocks are highly fractured, altered and weathered, with the fractures sealed with clay-sized weathering products. As a result, they yield small quantities of water only within the first few tens of feet below the water table (Hollyday, 1963).

The Triassic and Jurasic intrusive rocks occur in the western portions of the Mule Mountains and along the core and southern portion of the Dragoon Mountains. These are predominately quartz monzonite and granite which have been intensely altered and sheared. As in the case of the Precambrian rocks, they are generally quite impermeable below the first few tens of feet.

The Tertiary intrusive rocks outcrop in the northern and western portions of the Tombstone Hills and in the northern portion of the Dragoon Mountains. These intrusives are intermediate in composition, similar to quartz monzonite. The Schieffelin Granodiorite found in the western portion of the Tombstone Mining District is characterized by an irregularly-spaced, three-directional fracture system which stores small quantities of water. Shallow dug wells along Tombstone Gulch furnished water for the town of Tombstone during the first two years of its existence, and derived such water from fractures within the Schieffelin Granodiorite. Dewatering activities in the rocks east of the Schieffelin Granodiorite did not result in change in water level within the granodiorite, thereby documenting that the Schieffelin Granodiorite is not hydrologically connected with consolidated rocks to the east.

Dikes of granodiorite to diorite composition, similar to the Schieffelin Granodiorite in origin, cross the Tombstone Mining District along a trend of North 12 degrees East and dip steeply to the west.

Paleozoic Clostic Rocks: The Bolsa Quartzite of middle Cambrian age is composed predominately of well indurated ~~hard~~ quartzite derived from quartzitic pebble grit and coarse sand, with a thin basal conglomerate. It crops out in the Tombstone Mining District, along the western edge of the Mule Mountains, and in the core of the Dragoon Mountains. Holly day (1963) ~~A thickness~~ reported a ~~of~~ 440 ~~feet (Hollyday, 1963)~~ foot thick ~~was found to comprise a~~ homogeneous aquifer in the Bolsa Quartzite as a result of numerous joints and fractures. ~~in this hard siliceous material~~. The Bolsa Quartzite is one of the best crystaline-rock aquifers within the Tombstone Mining District.

Paleozoic Carbonates: The various Paleozoic carbonate formations in the area are generally undifferentiated in the following discussion. These Paleozoic carbonates include the Abrigo Limestone, the Martin Limestone, the Escabrosa Limestone and the four local formations in the Naco Group; the Horquilla Limestone, the Earp Formation, the Colina Limestone and the Epitaph Dolomite. The composite thickness of these Paleozoic carbonates is approximately 5,200 feet, of which approximately 13% or 660 feet consist of partly siliceous material metamorphosed to hornsfels near younger intrusive rocks. Such hornfelsic material yields moderately large quantities of water. The remaining 4,540 feet of non-soliceous material in the Paleozoic

carbonate sequence is composed of predominately limestone with subordinate amounts of modular chart, dolomite and calcarious shale. Fractures in the carbonate material have generally been enlarged by solution~~ing~~ cavity development above ~~the water table~~ and to a depth of ~~within~~ 200 to 300 feet below the water table.

Bisbee Formation: The Bisbee Formation of Cretaceous age outcrops in the central portion of the Tombstone Mining District and the Tombstone Hills. It also underlies most of the northern half of the Mule Mountains and the Eastern portion of the Dragoon Mountains. The Bisbee Formation, within the Tombstone Mining District, is subdivided into three generalized geologic units: Bisbee Formation clastics, Blue Limestone and Joe Limestone. The Bisbee Formation has a composite thickness of approximately 3,000 feet, of which approximately 160 feet is limestone. The lowermost clastic rocks at the base of the Bisbee Formation are locally known as "novaculite", and unconformably overlie the Epitaph Dolomite, ranging in thickness between 55 and 125 feet. The "novaculite" is an interbedded sequence of limestone ~~conglomerate~~ fragments in a quartzitic sand matrix, sandy limestone, calcarious shale and chert. The "novaculite" has been altered to extremely hard and brittle hornfels.

The "novaculite" is conformably overlain by the Blue Limestone. It is a medium to thin-bedded silty limestone ranging in thickness between 20 and 40 feet. The Blue Limestone has generally been subjected to

extreme solutioning above the present water table prior to deposition of silver ores.

The Joe Limestone is a cherty limestone of approximately 20 feet thickness. Numerous fissures and faults within the Bisbee Formation have been accompanied by strong zones of shattering. These zones give the Bisbee Formation clastics relatively ~~large~~ high porosity and permeablity, as compared with the Paleozoic carbonates.

Volcanic Rocks: Two ages of volcanics occur within the Tombstone District. The Cretaceous-Tertiary volcanics outcrop along the San Pedro River, southwest of the Tombstone Hills. These are composed of andesite and quartz latite, and have been intruded and broken by ~~later~~ younger rocks. The upper quartz latite member contains water-deposited tuff beds, with a total thickness of Cretaceous-Tertiary volcanics of approximately 6,000 feet.

Tertiary-Quarternary volcanics outcrop in the area of Stockton Hill, between the Tombstone Hills and the southern part of the Dragoon Mountains. These volcanics are predominately latite tuff and rhyolite tuff, together with flows of hornblend andesiate. A small plug-shaped mass of olivine basalt occurs within valley alluvium approximately three-quarters of a mile northeast of Tombstone. These volcanics supplied much of the detrital material forming the alluvium in the valley northeast of Tombstone.

5.1.3 Structure

Geologic structure within the Tombstone Mining District has an appreciable impact on the hydrologic conditions within the area. Four major structural elements have been identified, and are designated the Tombstone Syncline, the Schieffelin Dome, the Ajax Hill Horst and the Tombstone Alluvial Basin.

Tombstone Syncline: The central portion of the Tombstone Mining District lies ~~occurs~~ in a broad, asymetrical synclinal basin which plunges ~~ing~~ to the southeast. Three minor folds bring Paleozoic carbonate rocks to the surface. The syncline has resulted in the presence of a thick section of clastic rocks, thereby producing a potential storage reservoir for ground water. Clastic rocks thicken to the east southeast, as a result of the synclinal plunge.

The synclinal basin is traversed by at least eight major fissures, trending approximately North 45 degrees East and dipping steeply to the southeast. The fissures have been widened by solution activity above the water table and for a distance below the water table, and thus may impart a strong preferential ~~ed~~ orientation to the permeability of rocks within mine workings.

The synclinal basin is also traversed by a set of normal faults trending North 10 to 15 degrees East, and by a minor set of normal faults at approximately right angles to these faults. The faults

apparently are relatively open channelways for water circulation at depths greater than 400 feet below the water table (Hollyday, 1963).

The Tombstone Syncline is bounded on the west by the Schieffelin Dome, a granodiorite intrusive which plunges below the Tombstone Syncline at an angle of approximately 60 degrees (Hollyday, 1963). As noted earlier, the Schieffelin Dome acts as a barrier to ground-water circulation west of the Tombstone Syncline.

Ajax Hill Horst: The Tombstone Syncline is bounded on the south by the Ajax Hill Horst. These two features were formed by reverse movement along ~~with separation between the horst and the syncline by means of~~ the Prompter Fault, ~~a steep reverse fault dipping 60 to 80 degrees south~~, with a maximum stratigraphic displacement of approximately 4,000 feet. Paleozoic carbonate rocks in the vicinity of the Emerald Mine dip 50 to 60 degrees east. The Prompter Fault and its associated branches uplift relatively impermeable Precambrian albite granite which ~~and~~ continue the impermeable hydrologic boundary formed by the Schieffelin Granodiorite.

Tombstone Alluvial Basin: The Tombstone Syncline is bounded on the north and northeast by the Tombstone Alluvial Basin. Water in the alluvial deposits occur at a distance of approximately 1,500 feet east of the northeast corner of the Tombstone Mining District. Such alluvial water forms an important source of recharge to mine rocks during heavy pumping operations.

5.2 Hydrology

Hydrology of the Tombstone Mining District has been extensively studied and reported by Hollyday (1963). The following discussion is largely taken from that source.

5.2.1 Surface Water

Surface water does not exist in the Tombstone Mining District except during and immediately after periods of intense precipitation. The closest perennial stream to the Tombstone Mining District is the San Pedro River, a northerly-flowing stream located approximately six miles to the west of Tombstone.

5.2.2 Ground-Water Occurrence and Movement

Interest has long centered on ground-water conditions in the Tombstone area as a result of the problems presented to mining operations by the presence of large quantities of ground water. Mr. W. F. Staunton first reviewed the dewatering records of previous mining companies in order to estimate the requisite capacity of a new pumping plant. Staunton explained the reasoning behind his estimate in a 1908 paper and reviewed ~~subsequently published an article reviewing~~ the accidental flooding of the mines, the existing pumping plant and problems associated with regaining the 1,000-foot level in an article published in 1910. Mr. E. W. Walker (1908) also described the Tombstone Pumping Plant and

some of the dewatering problems. J. A. Church (1905) investigated the water problems in the district and published hypotheses as to the source and movement of water and its potential for control. Charles LeGrand (1914) reviewed existing pumping and provided an estimate of contemporary cost of dewatering. ~~Mr~~. R. B. Brinsmade (1906, 1907) reported on the method us~~ing~~ed for sinking wet shafts and proposed ~~ideas~~ suggestions ~~on~~ with respect to the source of the water. He also reported on progress in handling water problems at the Tombstone Mining District. By far the most complete description of hydrologic conditions in the area has been provided by Hollyday (1963).

Ground water occurs under both fissure occurrence in fractured consolidated rocks and as interstitial water ~~filling pore space~~ in alluvium. The alluvial reservoir is located north of the Tombstone Mining District. ~~with~~ Minor perched water occurrences in local deposits of alluvium along desert washes immediately ~~after~~ following precipitation events.

The consolidated-rock aquifer consists of water-fill~~ing~~ed minute fractures, larger fissures and major solution openings, ~~in regions~~ where metamorphism and structural deformation have developed large secondary permeability within the rocks. ~~With~~ In the Tombstone Mining District this consolidated rock reservoir is encountered in all but the extreme western part of the district. ~~with~~ Static water levels are found at depths ranging from 400 to 600 feet below land surface. The bulk of this ground-water reservoir is contained within the upper 300 feet of saturated rock (Hollyday, 1963). Below this depth, ~~with~~ fissures and fractures

decreas~~ing~~e in open space, and solution cavities becoming almost non-existent. ~~below this depth~~. Recharge to the consolidated rock ground-water mass occurs by infiltration of precipitation through highly-fractured zones in the bedrock of the mountains and through alluvial recharge along washes in the valley areas. Water in the ground water reservoir moves slowly down gradient, away from the mountain front, toward the San Pedro River and Whitewater Draw. The direction of ground-water flow within the Tombstone District is generally to the north in areas south of the city and to the west in areas north and east of the city. Discharge is as seepage outflow to the San Pedro River and as transpiration by phrentophytes in the river valley and along Whitewater Draw.

Hollyday (1963) has divided the Tombstone Mining District into four generalized hydrogeologic regions. The region of greatest yield and least drawdown is located to the northeast of Tombstone, in the area of valley alluvium which is, in turn, underlain by the Bisbee Formation. Region 2, including the P.B.R. Minerals site, is the area of next highest yield, but is characterized by a greater specific drawdown. This region contains the thicker portions of the Bisbee Formation clastic rocks. Region 3 is the area of lowest yield and greatest drawdown within the mining district, and is underlain by predominately carbonate rocks adjacent to the impermeable Schieffelin Dome and Ajax Hill Horst. Region 4 is characterized by the Schieffelin Dome west of the Tombstone Syncline and the impermeable albite granites in the western part of the Ajax Hill Horst.

Ground-water development in the Tombstone Mining District has dealt primarily with efforts at dewatering, to allow deep mining. These efforts included empirical testing to estimate dewatering capability, along with ~~and~~ the provision of water for milling operations. Only minor water development has occurred for municipal use.

~~The first consistent efforts at dewatering occurred during the period 1881-1891, at which time several mining companies attempted separate and subsequently cooperative dewatering efforts. The largest scale dewatering operations occurred during the 8 year period from 1903 to 1911, under a program of centralized management. During this time, many serious water problems were encountered. During the following period of 1911 to 1954, water levels that had previously been lowered by pumping returned to their natural elevations. Small, localized water development efforts were conducted to test aquifer response and to furnish water for milling. Intermittent pumping was conducted for 15 months during 1954 and 1955 to test aquifer response and to permit dry working conditions for underground diamond drilling.~~

The first known discovery of water was made in the Sulphuret Shaft in March, 1881 at an elevation of approximately 4,110 feet. The Sulphuret Shaft is immediately adjacent to the present open cut which was operated by the P.B.R. Minerals predecessors. In April, 1882, the Grand Central Shaft encountered water at approximately the same elevation as that in the Sulphuret Shaft. Water was encountered at an elevation approximately the same in the Contention Shaft and the Head

Center Shaft in the winter of 1882. The Emerald Shaft, located south of the main mining district, encountered water in 1988 at an elevation of approximately 4,090 feet, after the first efforts at pumping and dewatering had been in place. All these shafts are now within or immediately adjacent to the large open pit on the P.B.R. Minerals site.

The first major efforts at dewatering were installed by tne Grand Central Company during 1883, with a capacity of approximately .5 million gallons per day combined capacity. These pumps proved inadequate to lower the water to a significant depth, so an additional capacity of 1.5 million gallons per day was installed. At approximately the same time, the Contention Company installed an additional capacity of 1 million gallons per day. The two main companies were thus able to lower the water table approximately 100 to 130 feet during 20 months of pumping between May, 1884 and May, 1886 (Hollyday, 1963). By April, 1886, water had been encountered in the West Side workings in the northern part of the district, at an elevation of approximately 4,116 feet, and an average withdrawal of 153 gallons per minute resulted in an 11-foot drawdown. Water from the West Side workings were used for supply in the Girard Mill. During 1890 water was encountered in a winz at the bottom of the Lucky Cuss workings at an elevation of 4,110 feet. Dewatering at this site by means of pneumatic pumps and iron bailers succeeded in lowering the water table approximately 100 feet. This variety of experience

demonstrated that successful dewatering would require the construction of a modern (for that time) pump plant of large capacity under centralized management.

Pumping and shaft sinking for a new Pump Shaft was begun in December, 1902. Apparently the plans were to reach the 1,000-foot level in less than two years; however, a four-year time period was required before the 1,000-foot level was actually reached. ~~Accidents~~ Interruptions to the steam power supply caused the ultimate submergence of the pumping equipment in June, 1909. Efforts to regain the 1,000-foot level led to the ultimate termination of pumping in January, 1911 and the resultant bankruptcy of the Tombstone Consolidated Mines Company. Records indicate that the Pump Shaft produced 36,900 acre feet of ground water over the 8-year period, or an average of 2,830 gallons per minute, ~~a~~ with a maximum pumpage of 5,280 gallons per minute for a 24-hour period. The pumpage resulted in a 440 drawdown during cross cutting operations on the 1,000-foot level.

Problems encountered during these dewatering operations were ~~first of all~~ primarily related to the insufficient pumping capacity and problems associated with submergence of equipment during brief periods of power supply failure. Finally, the companies failed to take into account the vast quantity of water which would have to be pumped from storage during dewatering operations. Such dewatering operations were, of course, conducted before ~~the development of the science of~~ geohydrology theories were developed.

During 1954 and early 1955, Newmount Mining Corporation conducted an extensive dewatering operation, utilizing the West Side shaft to dewater the 600-foot level, provide water for diamond drilling, and test aquifer response. The dewatering operations were carefully monitored, utilizing the modern techniques of ~~science of~~ geohydrology. The West Side shaft produced an average of 505 gallons per minute for the first six months, and 41 gallons per minute for the remaining nine months. The water level was lowered approximately 35 feet in the West Side shaft, with a concomitant lowering of approximately 13 feet at an observation well one-third of a mile away. The main problem during this time was the clogging of pump intake streams with wood pulp and debris from the flooded workings.

The first recorded use of the ground water for municipal supply was in May, 1948, at which time Tombstone completed its 700-foot-deep Well #1 on the south side of town, to augment the municipal water supply derived from springs located in Miller Canyon during periods of low flow. Intermittent pumping of approximately 260 gallons per minute occurs during daylight hours on peak demand.

The various efforts at dewatering have been utilized to determine aquifer characteristics such as ~~of~~ the coefficient of transmissibility (T) and the coefficient of storage (S). Assumptions implicit in hydrologic theory require that:

- The aquifer is homogeneous and isotropic;

- The well being tested completely penetrates the aquifer and is of infinitesimal diameter,
- The coefficient of transmissibility is constant in all places and at all times,
- The aquifer is bounded by impermeable strata both above and below,
- The coefficient of storage is constant and water is released instantaneously from storage with a decline in head,
- The flow to the well is laminar and radial or unidimensional in sectional view, and
- The aquifer is of infinite a real extent.

Geologic evidence indicates that none of these assumptions is actually valid in the Tombstone Mining District. Inspite of the significant departures, the assumptions may be approximately fulfilled by taking into account the macro-scale fissure patterns and the interconnections formed by the extensive mine workings in the Tombstone Mining District. Hollyday (1963) concluded that the Tombstone aquifer complex may, indeed, be treated by hydrologic theory if observation well data is taken from tests of long duration. Hollyday utilized the existing pumping data to calculate transmissivities and storage coefficients. Table 5.1, adapted from Hollyday, provides information calculated on the various pumping efforts during the period from 1903 to 1955. Coefficient of transmissibility values range over ~~the~~ a rather narrow range from 10,000 to 15,000 gallons per day per foot. The coefficient of storage ranges from a low of 0.003 to a high value of 0.2. Hollyday explain~~s~~ed this rather wide range as a change in storage

coefficient as the cone of depression spreads. In essence, the pumping efforts are significantly different depending on whether or not the interconnected workings are dewatered.

5.2.3 Ground-Water Utilization

Ground water is not generally used widely in the P.B.R. Minerals area, as a result of the great depth to water, and the ready availability of an imported source of potable water from springs in Miller Canyon, ~~and~~ supplied by the Town of Tombstone. Nearby ranches utilize windmills drawing from perched water mosses in alluvium along various dry washes. Table 5-2 provides information on wells registered with the State of Arizona within at least a 3-mile radius of the proposed P.B.R. site.

P.B.R. Minerals currently maintains 3 wells in the vicinity of their existing wash facility. One of these (well #2, D-22-20-12cb2) is pumped continuously and used for makeup water at the facility. While no completion data are available on this well, it is located in the vicinity of numerous old mine workings, and probably draws water from old mine openings. The other two P.B.R. Minerals wells (wells #1, D-22-20-12cb1, and #3, D-22-20-11db) are also in the general vicinity of mine workings; however, they are not pumped except on an intermittent basis, for water-quality sampling. As will be discussed in the following section, the water quality of wells #1 and #2 indicate they are not completed in as high mineralized a rock moss as is well #2.

Ground water from the competent rock formations is withdrawn for supplemental municipal use by means of Tombstone Well #1 (D-22-11ad). As reported by Hollyday (19623), this 700-ft deep well was completed in May, 1948 and is pumped at a rate of 260 gpm during daylight hours during periods of peak demand. The Tombstone Well is located approximately 1 mile north of and downgradient from the proposed P.B.R. Minerals leach facility.

It is proposed that P.B.R. Minerals construct a fourth well (D-22-20-a411) in the area immediately north (downgradient) from the proposed leach facility. This well will be pumped continuously, thereby forming a cone of depression which will assure capture and deflection of any ground-water degradation which might result from the proposed leach facility. Pumped water will be discharged into the Barren Pond, where it will serve as make up water for the leach facility.

5.2.4 Ground-Water Quality

Prior, published studies of the geohydrology of the Tombstone area have not addressed water quality to any significant detail. Hollyday (1963) makes no mention of water quality. Fortunately, P.B.R. Minerals and its predecessors have collected water quality data, for selected parameters, over a long period of record. Occasionally samples have been collected and assayed for a more complete suite of

parameters, by both P.B.R. Minerals and the Arizona Department of Health Services.

Table 5-3 presents data on the concentration of mercury, nitrate, and total and free cyanide for the three P.B.R. wells and Tombstone Well #1 during the period June 16, 1987 through April 20, 1988. These samples were collected by the P.B.R. chemist or by personnel from Smith and Smith Laboratories, and analyzed by Smith and Smith Laboratories. The data are also plotted on Figure 5- , with concentration shown as a function of time.

The data show that Wells #1 and 3 are generally of high quality. Well #2 is generally more mineralized, as a result of its location with in the area of old mine workings. This is reflected by the relatively elevated values of mercury, with a mean concentration of 0.026 mg/l and a standard deviation of 0.006 mg/l for the period June, 1987 through April, 1988. This is 13 times the USEPA Primary Drinking Water standard of 0.002 mg/l, and doubtless reflects a long-term contamination associated with natural mineralization, perhaps exacerbated by historial use of mercury for precious-metals recovery. Mercury is not generally detected in P.B.R. Wells #1 or #3, with only one detection value (apparently an analytical artifact) in Well #3, and no detectable values in Well #1. The Tombstone well has only one, barely-detectable mercury value.

During ___date_____, monitoring by P.B.R. Minerals of Well #2 it was found that the well contained detectable free and total cyanide. ~~While~~ There is no drinking water standard for cyanide. It was ~~felt~~ believed that this contamination likely had resulted from prior use of cyanide for precious-metals leaching by prior tenants of the P.B.R. site. Elevated values of nitrate, in excess of the EPA Primary Drinking Water Standard, ~~was~~ are also ~~felt~~ considered to be from the prior use of cyanide, as cyanide can be oxidized to form nitrate. Nitric acid had also reportedly been used by a prior tenant.

On February 23, 1987, representatives of the Arizona Department of Health Services (ADHS) collected samples of water from Well #2, and from Tombstone Well #1, and analyzed these ~~wells~~ samples for major ions, nutrients, and trace metals. The sample from Well #2 (Table 5-) was found to contain 0.200 mg/l total cyanide, but no detectable free cyanide. The "total" cyanide was probably present in the form of a stable metallic complex such as copper, iron, or nickle cyanide. Mercury was present at elevated levels of 0.0235 mg/l, which is consistent with P.B.R. monitoring results, and nitrate was present at 27.3 mg/l, again generally consistent with the ~~P.B.R. results~~ levels established by PBR monitoring.

The ADHS sample from Tombstone #1 did not detect mercury or cyanide. Nitrate was present at 10.32 mg.l, slightly in excess of the EPA Primary Drinking Water Standard.

Major-ion data from the two ADHS samples, collected February 23, 1987, were entered into a computer data base and used to generate trilinear plots (Piper diagrams) and Stiff plots (Figure 5-). As shown by the diagrams, both waters are calcium bicarbonate types, with Well #2 showing somewhat greater concentrations of magnesium sulfate. This is consistent with the known mineralization in the area of the well. The reported potassium value of 410 mg/l apparently is a typographical error and should have been 4.10 mg/l. The reported value cannot be correct, and a value of 4.10 is consistent with the ion balance. Using 4.10 mg/l yields an ion balance of 1.3, whereas use of 410 mg/l yields an unacceptable ion balance of 3.98

The data indicate that "background" values of nitrate are very close to the EPA Drinking Water Standard. Such a finding is not at all uncommon, especially in semiarid regions. Nitrate is "fixed" from atmospheric sources and flushed to the water table. In the case of the Tombstone Well, this may have been exacerbated by the prior disposal of sewage into old mine workings in the vicinity of the town well.

Numerous investigations have documented the presence of nitrate salts and minerals in soils and rock material above the water table in arid regions. These investigations have also shown that nitrate salts can be leached into increasing infiltration of meteoric water or by elevation changes in the water table.

The data strongly indicated a relationship between prior use of cyanide at the site and observed elevated values of cyanide and nitrate in Well #2; however, this was not consistent with geochemical experience. While it is known that nitrate commonly is conservative (e.g., it moves at the same rate as ground water), the geochemical literature has documented that cyanide tends to form metallic complexes and not be mobile in the ground-water environment. It was thus difficult to explain how cyanide from the old processing facility

could have migrated 500 feet to the water table, followed by a lateral migration of several hundred feet to report to Well #2.

This question was answered in a rather direct manner during April, 1988. During the process of removing contaminated clay from a prior liquid holding pond, an earth scraper broke through into a vertical shaft leading to abandoned mine workings ~~associated with~~ connected to mine workings in the vicinity of Well #2. It is apparent that cyanide-bearing wastes had percolated through the clay covering the vertical shaft, moved down the shaft, and reported to Well #2. Continued pumping of this well has returned the free cyanide to generally non-detectable levels. There have been annual peaks of free cyanide, probably associated with rainfall and resultant migration of recharge down the shaft. This should not be a future factor, now that the contaminated clay has been removed from around the shaft collar.

PBR MINERALS, INC.
P.O. BOX 370
TOMBSTONE, ARIZONA 85638

June 13, 1988

Mr. Jim Rouse
Geochemical Engineering
274 Union Boulevard, Ste. 460
Lakewood, Colorado 80228

Dear Jim:

Please find enclosed the "Notice of Disposal" application. We have completed the sections that you have highlighted for completion. In Section 1-I, we were wondering if this is a existing facility or new? In our opinion we feel it is a new facility. I have also enclosed two reproducible topographical maps with a scale of 1" = 40' on a 1 foot contour; drawings of the cyanide mix area, cyanide storage area, and cyanide can detoxification area; an interoffice memo from Tucson to Phoenix ADEQ offices, referring to the mercury and nitrates in well #2; and also a graph indicating the pan evaporation studies conducted by USDA.

Your graph on mercury and nitrate levels on well #3 for sample dated 12-3-87 is incorrect by an error with Smith & Smith Laboratories in using a contaminated bottle to collect the sample. The well was resampled for that particular date on January 18, 1988, indicating the nitrate to be at 10.2 and the mercury to be at less than .001. Smith & Smith Laboratories are submitting a letter to us verifying this fact and we will forward a copy to you as soon as we receive it.

We are also enclosing the Western Technologies, Inc. analysis of TEI Well #1, TEI Well #2, and City of Tombstone Well #1, The Total and Free Cyanide are somewhat higher than the results that we have been receiving from Smith & Smith Laboratories but are still within the allowable limits of .2 mg/L. Smith & SMith Laboratories should have the results on their duplicate water samples by 6-15-88. We will forward to you a copy as soon as we receive this analysis.

Sincerely,

Dustin L. Escapule, Sr.

DLE:cr

(1)

NOTICE OF DISPOSAL

1. a. Facility Name: GRAND CENTRAL LEACHING FACILITY

b. Facility Location (List address or describe access by roads):

OLD BISBEE HWY, TOMBSTONE, AZ

County Cochise Zip Code 85638

Township 20S Range 22E Section(s) 11, 12, 13, & 14, ____ 1/4 ____ 1/4 ____ 1/4

c. Facility Manager: GARY LINDROOS

Telephone Number: 602-457-2282
(Area Code)

d. Owner's Name PBR Minerals, Inc.

e. Owner's Address 950 S Kyline Drive · PO Box 370
Tombstone, AZ 85638 ~~Zip Code~~ →

f. Landowner of the facility site: Lessor: Tombstone Development Co.
Lessee: PBR Minerals Inc

g. Facility's plan engineer/architect:

Name: Jim V. Rouse

Firm: Geochemical Engineering, Inc

Address: 274 Union Blvd, Suite 460
Denver, CO 80228

Telephone number: 303-988-8702
(Area Code)

Water Permits Unit
Revised 9/86

h. Type of Permit you are applying for:

area permit _____ individual facility permit X

i. Type of facility requesting permit:

new _____ existing X

2. a. Attach a topographic map (preferably a 7.5 minute quadrangle base), showing the geographic location of the facility(s) and all disposal locations. In addition, show the location of any existing groundwater withdrawal wells within the approximate vicinity (¼ mile radius) of the disposal area and identify the use of each well (i.e. industrial wells, drinking water supply wells, etc.). (If applying for an area permit as described in R9-20-211, indicate on the map the location of each facility and disposal location in the proposed permitted area).

b. List Latitude/Longitude of all disposal locations indicated on the attached map

Centered on 31° 42'30" N. and 110° 3' W.

3. a. Type of Facility(s) Precious-metal heap-leach facility, zero discharge, with spent ore left on pad.

b. Nature of Activity conducted at facility(s) Crushed ore is loaded on an impervious pad and leached with a dilute solution of sodium cyanide. "Pregnant" solution is treated for recovery of precious metals. Solution is then recycled. Spent ore is neutralized and left in place. All process ponds are double lined, with leak detection systems. Area ground water is monitored.

c. List applicable U.S. Department of Commerce Standard Industrial Classification (SIC) Codes for above activities

1041 - Gold Mining

1044 - Silver Mining

*Began initial operation of site 9/79
Operations by present Co. 7/88
Anticipated Site Construction 11/88
3/89

4. Date Facility began/will begin operating

5. Expected Facility(s) Operational Lifetime 10 years

6. List any other environmental permits issued to the facility(s) (i.e. air quality permit, NPDES permit, hazardous waste permit)

Air Quality Permit to be Applied For

7. a. Describe disposal activities at the facility(s)

There is no surface or subsurface disposal. All process streams are recycled. All process-solution ponds are double lined, with a leak detection system, and with the lower liner being a composite membrane/clay liner shown to have ability to attenuate contaminants. Pad liner also underlain by clay. Spent ore is neutralized to destroy residual cyanide.

b. Describe any control measures and treatment processes designed and operated to protect groundwater quality from effects of the disposal

As noted in 7a, all process pads and ponds are lined with membrane liner and with clay liner capable of attenuating contaminants. Spent ore will be neutralized after leaching, to destroy residual cyanide. Pumped monitor well assures that should any leaks occur and reach ground water (highly unlikely) they would be detected, and could be treated.

c. Describe existing groundwater use(s) of the receiving aquifer(s)

Process water for existing wash plant and proposed leach plant taken from one of 2 existing wells downgradient of site. Town of Tombstone uses same aquifer as a supplimental source of supply, with a well located approximately miles from area of proposed activity

d. Note depth to groundwater The water table elevation is approximately 9100' which is 300'± below land surface, depending on the elevation of the point of measurement

Source of data MS. Thesis by Holliday, continued observation in Co. wells

Date of measurement 1963 and subsequent

e. If available, attach analytical reports for the ambient groundwater concentrations of the receiving aquifer(s) for those constituents listed that are contained in the disposal. Indicate source of data and date of sampling for all values listed. See attached table

8a. Identify the type(s) of waste(s) generated by each process within the facility. Be as descriptive as possible without listing specific constituents.

Wastes contain spent ore, neutralized to degrade free cyanide. Residual pore water contains trace of heavy metals, cyanide complexes, and nitrate from cyanide degradation.

b. If available, attach analytical reports for the specific pollutants disposed by the facility. See attached report on attenuation of leach solution pollutants by clay subliner

c. Estimate the disposal schedule including the annual average in hours per day, days per year, and the disposal periods if the disposal is seasonal.

Hours/day 24 HRS/DAY

Days/year 365 DAYS/YR.

Seasonal Distribution of Disposal

d. Estimate the flow rate(s) of the disposal i.e. minimum, average, and maximum daily flow; mean annual flow; or mean, minimum, and maximum flow by season if disposal is periodic; or by whatever other units appropriate to the type of disposal.

Mined Tonnage, per year 350,000

Solution circulation [illegible] 600 GPM

9. Describe any existing groundwater quality monitoring program(s) (attach supporting technical reports if available)

Three existing Company water-supply wells are monitored on a routine basis, as is the Tombstone water-supply well. A new monitor well will be drilled immediately downgradient of the facility, and will be continuously pumped to assure formation of a cone of depression and capture of any potential leakage.

10. Include any other data or information which, in the judgement of the owner/operator, demonstrates that the facility qualifies for a groundwater quality protection permit based on compliance with the criteria listed in R9-20-208.A. Use attachments if applicable (i.e. depth to groundwater, geology at the site).

Qualifying factors include: (1) lined ponds and pads, with contaminant attenuation capacity in clay subliner, (2) neutralization of cyanide in spent ore, (3) depth to water table of approximately 500', (4) berming and lining of reagent storage and mix facilities (5) pumped monitor well which can detect and contain any contaminant migration, and (6) high surface evaporation rates

11. Certification:

"I certify that under penalty of law that I have personally examined and am familiar with the information submitted in this document and all attachments and that, based on my inquiry of those individuals immediately responsible for obtaining the information, I believe that the information is true, accurate, and complete. I am aware that there are significant penalities for submitting false information, including the possibility of fine and imprisonment."

Printed Name of Applicant

Title

Date Application Signed

Signature of Applicant

PBR MINERALS TOMBSTONE, ARIZONA

WATER QUALITY DATA

		Well #1				Well # 2				Well #3				Tombstone #1			
				Cyanide				Cyanide				Cyanide				Cyanide	
Day of Sample	Date Sampled	Mercury mg/l	Nitrate mg/l	Total mg/l	Free mg/l	Mercury mg/l	Nitrate mg/l	Total mg/l	Free mg/l	Mercury mg/l	Nitrate mg/l	Total mg/l	Free mg/l	Mercury mg/l	Nitrate mg/l	Total mg/l	Free mg/l
1	6/16/87	0.001	2.6	<.01	<.01	0.026	8.9	0.05	<.01					0.0011	5.8	<.01	<.01
38	7/24/87	<0.001	1.5	<.01	<.01	0.026	7.0	0.13	0.02					<.001	8.6	<.01	<.01
51	8/6/87	<0.001	2.0	<.01	<.01	0.024	6.7	0.13	0.03	<0.001	2.5	<0.01	<0.01	<.001	7.5	<.01	<.01
64	8/19/87					0.024	10.9	0.07	NS								
85	9/9/87	<0.001	2.3	<.01	<.01	0.026	9.0	0.08	0.01	<0.001	6.2	<0.01	<0.01	<.001	6.0	<.01	<.01
100	9/24/87					0.0264	12.4	0.13	<0.01								
113	10/7/87	<0.001	3.0	<.01	<.01	0.020	22.3	0.12	0.01					<.001	2.5	<.01	<.01
119	10/13/87									<0.001	8.7	<0.01	<0.01				
127	10/21/87					0.0235	22.3	0.08	0.01								
141	11/4/87	<0.001	2.6	<.01	<.01	0.028	24.9	0.13	0.02	<0.001	10.1	<0.01	<0.01	<.001	9.4	<.01	<.01
155	11/18/87					0.0297	16.3	0.09	0.02								
170	12/3/87	<0.001	3.3	<.01	<.01	0.026	28.8	0.04	0.01	0.0166	17.4	0.02	<0.01	<.001	8.6	<.01	<.01
180	12/21/87					0.034	24.2	0.13	0.01								
204	1/6/88	<0.001	4.0	<.01	<.01	0.0386	23.5	0.14	<.01					<.001	9.1	<.01	<.01
216	1/18/88					0.029	22.6	0.09	0.01	<0.001	10.2	<0.01	<0.01				
232	2/3/88	<0.001	2.2	<.01	<.01	0.020	23.4	0.14	0.01					<.001	8.6	<.01	<.01
247	2/18/88					0.020	31.5	0.12	<.01								
261	3/3/88	<0.001	3.9	<.01	<.01	0.020	18.5	0.11	<.01					<.001	7.1	<.01	<.01
289	3/31/88					0.024	23.4	0.20	0.03								
295	4/6/88	<0.001	2.8	<.01	<.01	0.027	23.0	0.18	0.02					<.001	8.2	<.01	<.01
309	4/20/88					0.030	22.9	0.08	<.01								
	Mean:		2.745			0.026	18.12	0.112	0.012		9.18				7.4		
	Std. Dev.:		7.7			0.005	7.44	0.04	0.008		4.96				2.012		

000113

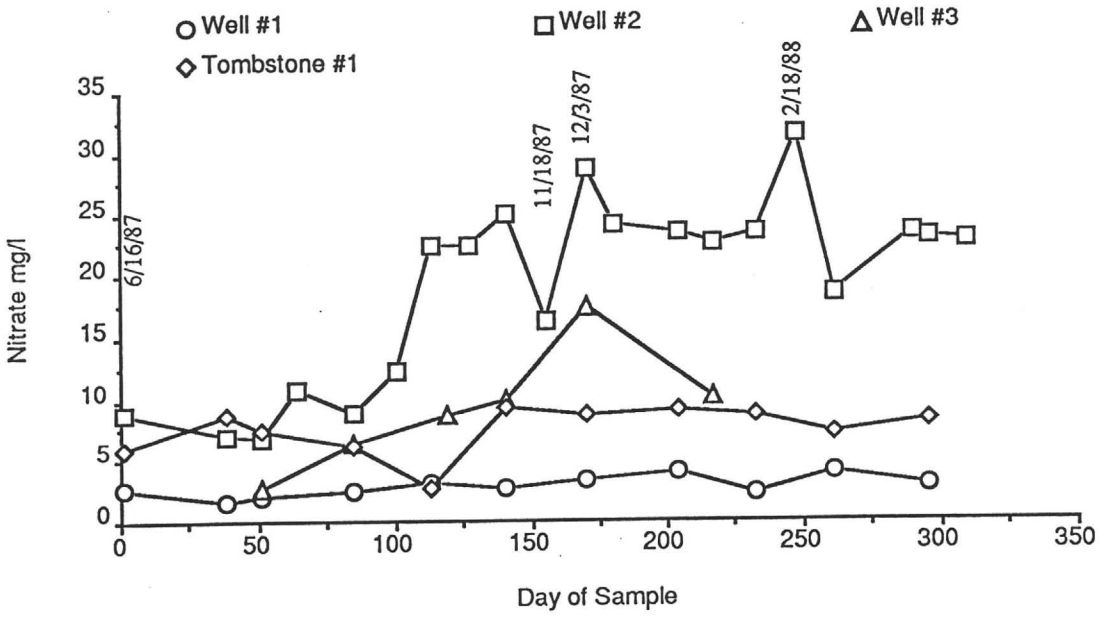
Well #1
Well #2
Well #3
Tombstone #1
Nitrate mg/l
Day of Sample
6/16/87
11/18/87
12/3/87
2/18/88
0
5
10
15
20
25
30
35
0
50
100
150
200
250
300
350

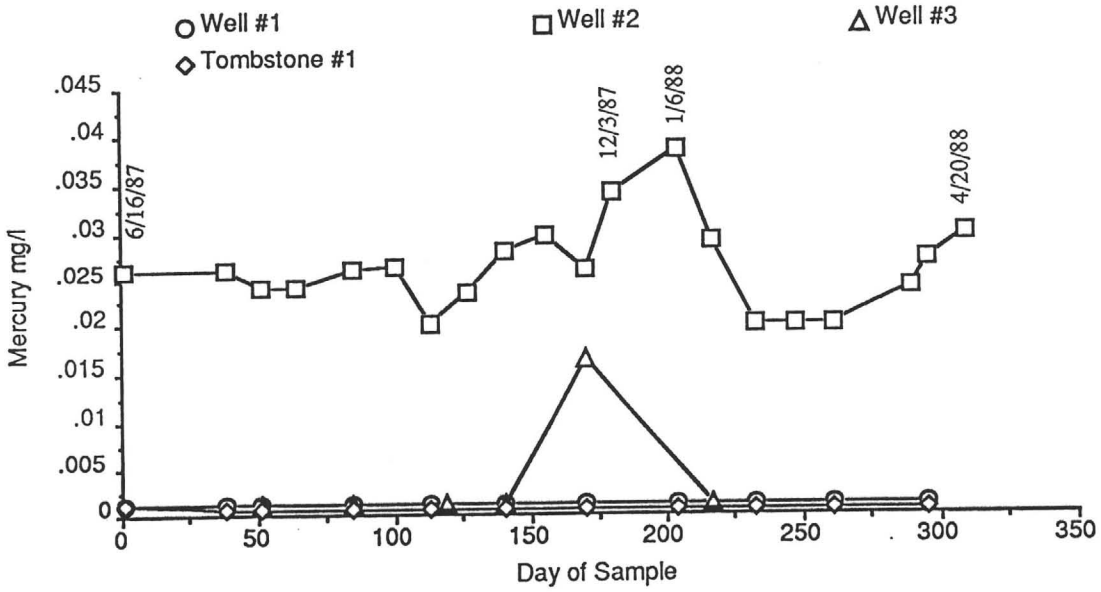
Well #1
Well #2
Well #3
Tombstone #1
Mercury mg/l
Day of Sample
6/16/87
12/3/87
1/6/88
4/20/88
0
.005
.01
.015
.02
.025
.03
.035
.04
.045
0
50
100
150
200
250
300
350

Smith & Smith Environmental Consultants
PH. 458-4789
P.O. BOX 1146, SIERRA VISTA, ARIZONA 85636

June 14, 1988

Mr. Gary Lindroos
P. B. R. Minerals
950 Skyline Drive
P O Box 370
Tombstone AZ 85638

Dear Gary,

Re: Contaminated sample (TEI well # 3) in 1987

On December 3, 1987 a sample was collected by you and Ruth Vanden Broeck of our laboratory, at TEI well # 3. Unexpectedly, cyanide was found in the sample. Prior analysis of this well never indicated a cyanide contamination, and subsequent analyses have consistently shown less than 0.01 mg/L to be present. I feel this discrepency was due to a contaminated bottle that we had used for another sample. We have since implemented the use of disposable bottles in our laboratory sampling program, and have corrected the problem.

I apologize for any alarm this may have caused you and your staff.

Thank you for your patience.

Respectfully,

Kathryn W. Smith

Kathryn W. Smith
Laboratory Director

PBR MINERALS, INC.
950 SKYLINE DRIVE
P.O. BOX 370
TOMBSTONE, ARIZONA 85638
602-457-2282

June 14,1988

To: All Suppliers

From: Mike Ashworth, Administrator

Re: Trade Payables

On April 27, 1988, PBR Minerals, Inc. completed the cleanup operation of our leased property in Tombstone, Arizona; thus, fulfilling the requirements of the State of Arizona. The cleanup operation and the processing of metals from the tailings were being conducted under the guidelines of the State-issued Temporary Permit, and was, at that time, the only source of cash flow to the company.

PBR will be applying for a permanent heap leaching permit within the next four weeks, and we feel quite confident that within five months after our application is submitted, we will begin our heap leaching operation. During the six month wait, we intend to create a market and sell our by-product aggregate to the State, County and City municipalities, and to private construction entities , and to conduct an orderly liquidation of any of our assets that would not be functional for our heap leaching operation, in an effort to provide a sufficient cash flow to meet our overhead and pay our trade payables.

During the next three weeks, we will be developing an operation budget that will address an extended payout schedule for our trade. In conjunction with this budget development, please make note in your records of our new billing and mailing address of:

PBR MINERALS
950 Skyline Drive
P.O.Box 370
Tombstone, Arizona 85638

Thank you for bearing with us during this transitional period.

7-13-88

NOTICE OF DISPOSAL

1. a. Facility Name: Grand Central Leaching Facility

b. Facility Location (List address or describe access by roads):

Old Bisbee Highway, Tombstone, AZ

County Cochise Zip Code 85638

Township 205 Range 22E Section(s) 11,12, 13,14, ____ 1/4 ____ 1/4 ____ 1/4

c. Facility Manager: Gary Lindros

Telephone Number: 602-457-2282
(Area Code)

d. Owner's Name PBR Minerals, Inc.

e. Owner's Address 950 Skyline Drive, P.O.Box 370

Tombstone, AZ Zip Code 85638

f. Landowner of the facility site: Lessor:Tombstone Development Co.

Lessee:PBR Minerals, Inc.

g. Facility's plan engineer/architect:

Name: Curtis Sealy, P.E. and Jim V. Rouse, R.G.

Firm: Geochemical Engineering, Inc.

Address: 274 Union Blvd., Suite 460

Denver, CO. 80228

Telephone number: 303-988-8902
(Area Code)

h. Type of Permit you are applying for:

area permit _____ individual facility permit x

i. Type of facility requesting permit:

new x _____ existing _____

2. a. Attach a topographic map (preferably a 7.5 minute quadrangle base), showing the geographic location of the facility(s) and all disposal locations. In addition, show the location of any existing groundwater withdrawal wells within the approximate vicinity (½ mile radius) of the disposal area and identify the use of each well (i.e. industrial wells, drinking water supply wells, etc.). (If applying for an area permit as described in R9-20-211, indicate on the map the location of each facility and disposal location in the proposed permitted area).

b. List Latitude/Longitude of all disposal locations indicated on the attached map

Centered on 31°42'30" N. and 110°3' W.

3. a. Type of Facility(s) Precious - metal heap-leach facility, zero discharge with spent ore left on pad

b. Nature of Activity conducted at facility(s) Crushed ore is loaded on an impervious pad and leached with a dilute solution of sodium cyanide. "Pregnant" solution is treated for recovery of precious metals. Solution is then recycled. Spent ore is neutralized and placed nearby. All process ponds are double lined, with leak detection systems. Area ground water is monitored.

c. List applicable U.S. Department of Commerce Standard Industrial Classification (SIC) Codes for above activities

1041 - Gold Mining

1044 - Silver Mining

Date Initial Operation Began at Site: Sept., 1979
Date Operations Began by Applicant: January, 1988
Date Anticipated Construction Start: November, 1988

4. Date Facility began/will begin operating March, 1989

5. Expected Facility(s) Operational Lifetime 10 years

6. List any other environmental permits issued to the facility(s) (i.e. air quality permit, NPDES permit, hazardous waste permit)

Air Quality Permit to be applied for

7. a. Describe disposal activities at the facility(s)

There is no surface or subsurface disposal. All process streams are recycled. All process-solution ponds are double lined, with a leak detection system, and with the lower liner being a composite membrane/clay liner shown to have ability to attenuate contaminants. Pad liner also underlain by clay. Spent ore is neutralized to destroy residual cyanide, prior to unloading of pad.

b. Describe any control measures and treatment processes designed and operated to protect groundwater quality from effects of the disposal

As noted in 7a, all process pads and ponds are lined with membrane liner and with clay liner capable of attenuating contaminants. Spent ore will be neutralized after leaching, to destroy residual cyanide. Pumped monitor well assures that should any leaks occur and reach ground water (highly unlikely) they would be detected, and could be treated.

c. Describe existing groundwater use(s) of the receiving aquifer(s)

Process water for existing wash plant and proposed leach plant taken from one of three existing wells downgradient of site. Town of Tombstone uses same aquifer as a supplemental source of supply, with a well located approximately one mile from area of proposed activity.

d. Note depth to groundwater The water table elevation is approximately 4100', which is 500' below land surface, depending on the elevation of the point of measurement

Source of data M.S.Thesis by Hollyday, continued observation in Co. wells

Date of measurement 1963 and subsequent

e. If available, attach analytical reports for the ambient groundwater concentrations of the receiving aquifer(s) for those constituents listed that are contained in the disposal. Indicate source of data and date of sampling for all values listed.

8a. Identify the type(s) of waste(s) generated by each process within the facility. Be as descriptive as possible without listing specific constituents.

Wastes contain spent ore, neutralized to degrade free cyanide. Residual pore water contains traces of heavy metals, cyanide complexes, and nitrate from cyanide degradation.

b. If available, attach analytical reports for the specific pollutants disposed by the facility. See attached report on attenuation of leach solution pollutants by clay subliner.

c. Estimate the disposal schedule including the annual average in hours per day, days per year, and the disposal periods if the disposal is seasonal.

Hours/day 24 hours/day

Days/year 365 days/year

Seasonal Distribution of Disposal N/A

d. Estimate the flow rate(s) of the disposal i.e. minimum, average, and maximum daily flow; mean annual flow; or mean, minimum, and maximum flow by season if disposal is periodic; or by whatever other units appropriate to the type of disposal.

Mined tonnage, per year: 350,000

Solution circulation rate : 600 G.P.M.

9. Describe any existing groundwater quality monitoring program(s) (attach supporting technical reports if available)

Three existing company water-supply wells are monitored on a routine basis, as is the Tombstone water-supply well. A new monitor well will be drilled immediately downgradient of the facility, and will will be continuously pumped to assure formation of a cone of depression and capture of any potential leakage.

10. Include any other data or information which, in the judgement of the owner/operator, demonstrates that the facility qualifies for a groundwater quality protection permit based on compliance with the criteria listed in R9-20-208.A. Use attachments if applicable (i.e. depth to groundwater, geology at the site).

Qualifying factors include: (1) lined ponds and pads, with contaminant-attenuation capacity in clay subliner, (2) neutralization of cyanide in spent ore, (3) depth to water table of approximately 500', (4) berming and lining of reagent storage and mix facilities, (5) pumped monitor well which can detect and contain any contaminant migration, and (6) high surface evaporation rates.

11. Certification:

"I certify that under penalty of law that I have personally examined and am familiar with the information submitted in this document and all attachments and that, based on my inquiry of those individuals immediately responsible for obtaining the information, I believe that the information is true, accurate, and complete. I am aware that there are significant penalities for submitting false information, including the possibility of fine and imprisonment."

PBR MINERALS, INC.
Gary A. Lindroos
Printed Name of Applicant

Facility Manager
Title

July 13, 1988
Date Application Signed

Gary A. Lindroos
Signature of Applicant

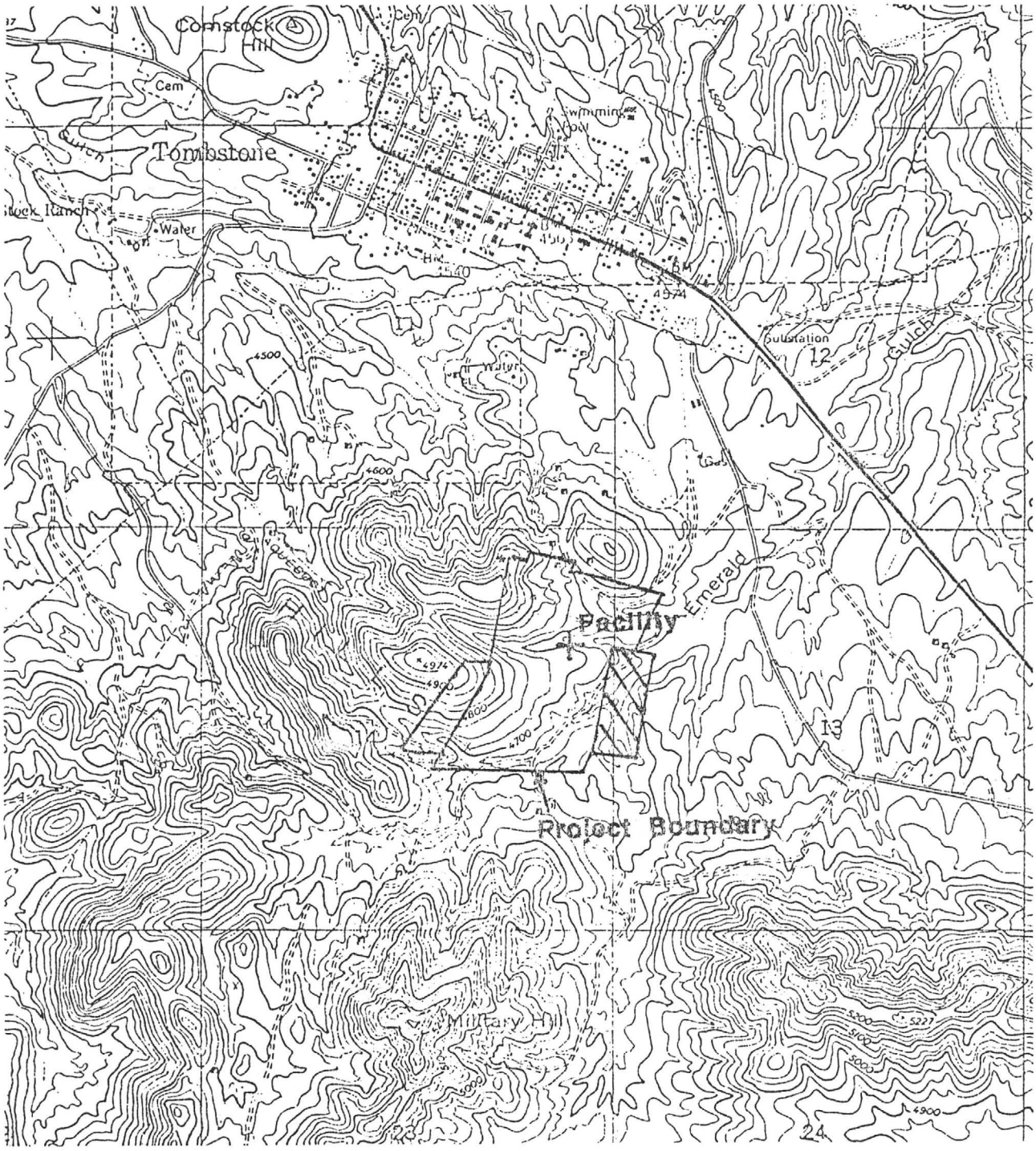

Lessor:
Tombstone Development, Co.
P.O. Box 1445
Grand Island, Nebraska 68801

Morning Star
Owner: Bob Crist
Tucon, Arizona

PROJECT:	REVISIONS	Grand Central Leaching Facility
DATE: 6/30/88		Property Ownership
GEOCHEMICAL ENGINEERING INCORPORATED Golden, Colorado		

000122

Table 5.3 PBR MINERALS TOMBSTONE, ARIZONA

WATER QUALITY DATA
Smith & Smith Lab

		Well #1				Well # 2				Well #3				Tombstone #1			
				Cyanide				Cyanide				Cyanide				Cyanide	
Day of Sample	Date Sampled	Mercury mg/l	Nitrate mg/l	Total mg/l	Free mg/l	Mercury mg/l	Nitrate mg/l	Total mg/l	Free mg/l	Mercury mg/l	Nitrate mg/l	Total mg/l	Free mg/l	Mercury mg/l	Nitrate mg/l	Total mg/l	Free mg/l
1	6/16/87	0.001	2.6	<.01	<.01	0.026	8.9	0.05	<.01					0.0011	5.8	<.01	<.01
38	7/24/87	<0.001	1.5	<.01	<.01	0.026	7.0	0.13	0.02					<.001	8.6	<.01	<.01
51	8/6/87	<0.001	2.0	<.01	<.01	0.024	6.7	0.13	0.03	<0.001	2.5	<0.01	<0.01	<.001	7.5	<.01	<.01
64	8/19/87					0.024	10.9	0.07	NS								
85	9/9/87	<0.001	2.3	<.01	<.01	0.026	9.0	0.08	0.01	<0.001	6.2	<0.01	<0.01	<.001	6.0	<.01	<.01
100	9/24/87					0.0264	12.4	0.13	<0.01								
113	10/7/87	<0.001	3.0	<.01	<.01	0.020	22.3	0.12	0.01					<.001	2.5	<.01	<.01
119	10/13/87									<0.001	8.7	<0.01	<0.01				
127	10/21/87					0.0235	22.3	0.08	0.01								
141	11/4/87	<0.001	2.6	<.01	<.01	0.028	24.9	0.13	0.02	<0.001	10.1	<0.01	<0.01	<.001	9.4	<.01	<.01
155	11/18/87					0.0297	16.3	0.09	0.02								
170	12/3/87	<0.001	3.3	<.01	<.01	0.026	28.8	0.04	0.01	0.0166*	17.4*	0.02*	<0.01	<.001	8.6	<.01	<.01
180	12/21/87					0.034	24.2	0.13	0.01								
204	1/6/88	<0.001	4.0	<.01	<.01	0.0386	23.5	0.14	<.01					<.001	9.1	<.01	<.01
216	1/18/88					0.029	22.6	0.09	0.01	<0.001	10.2	<0.01	<0.01				
232	2/3/88	<0.001	2.2	<.01	<.01	0.020	23.4	0.14	0.01					<.001	8.6	<.01	<.01
247	2/18/88					0.020	31.5	0.12	<.01								
261	3/3/88	<0.001	3.9	<.01	<.01	0.020	18.5	0.11	<.01					<.001	7.1	<.01	<.01
289	3/31/88					0.024	23.4	0.20	0.03								
295	4/6/88	<0.001	2.8	<.01	<.01	0.027	23.0	0.18	0.02					<.001	8.2	<.01	<.01
309	4/20/88					0.030	22.9	0.08	<.01								
323	5/4/88					0.034	17.8	0.18	0.02					<0.001	8.1	<0.01	<0.01
324	5/5/88	<0.001	2.4	<.01	<.01	0.025	-	0.15	0.01					<0.001		<0.01	<0.01
						0.028**		0.16**	0.01**								
338	5/18/88					0.034	21.2	0.12	<0.01								
	Mean:		2.717			0.027	19.159	0.117	0.015		9.18				7.46		
	Std. Dev.:		0.741			0.005	7.101	0.041	0.008		4.96				1.93		

* Contaminated Sample Container, data invalid ** Duplicate Sample

PBR MINERALS, INC.
P.O. BOX 370
TOMBSTONE, ARIZONA 85638
(602) 457-2282

As of April 24, 1989, PBR MINERALS, INC. has temporarily suspended the tailings leach operation in effort to devote our maximum energies in the open pit mining operation, which we are confident will start within the next 9 weeks.

During this time, we will be making improvements to our processing plant and smelter facilities plus upgrading our pit plan.

J. Michael Ashworth

J. Michael Ashworth
President

Groundwater Monitoring

DRINKING WATER QUALITY

22140468 — SPECIMEN NO

INORGANIC CHEMICAL ANALYSIS REPORTING FORM

5/23/84 — DATE RECD

Before completing, please read instructions on reverse side.

NOTE: WATER SYSTEM MUST COMPLETE ALL BLANKS INSIDE THIS BOX

PWS ID NO. (1-7): 0 4

LAB NAME AND ADDRESS

Western Technologies, Inc.
3737 East Broadway Road
P.O. Box 21387
Phoenix, Arizona 85036

LAB ID NO (42-46): 0 0 0 1 0

SAMPLE DATE (31-36): Mo. | Day | Yr.

SAMPLE (37): Type | Time (Hrs.) (38-41)

WATER SYSTEM NAME

SAMPLING POINT—WELL NO. OR EXACT LOCATION

MAILING NAME AND ADDRESS

Tombstone Exploration Inc.
17 East 76th Street
New York, New York 10021

SAMPLE APPEARANCE

- [x] Clear
- [ ] Turbid
- [ ] Other (comment)

WATER SUPPLY SOURCE

- [ ] Well
- [ ] Surface

SAMPLE TYPE CODES

C - Check Sample
D - Regular Distribution Sample
F - Plant Tap Sample
R - Raw Water Sample
S - Special Sample

SAMPLER'S COMMENTS OR INSTRUCTIONS

CONTAMINANT CODE	ANALYSIS METHOD	CONTAMINANT NAME	(MCL)	ANALYSIS RESULTS (mg/l)	EXCEEDS
1005	101	Arsenic	(0.05)	<0.02	
1010	101	Barium	(1.)	<0.5	
1015	101	Cadmium	(0.010)	<0.01	
1020	101	Chromium	(0.05)	<0.02	
1025	107	Fluoride	(1.4-2.0)	1.2	
1030	101	Lead	(0.05)	<0.02	
1035	103	Mercury	(.002)	<0.001	
1040	109	Nitrates (N)	(10.)	<0.2	
1045	101	Selenium	(0.01)	<0.01	
1050	101	Silver	(0.05)	<0.02	
1927	149	Alkalinity		155.	
1016	101	Calcium		158.	
1017	149	Chloride		3.0	
1022	101	Copper		<0.02	
1915	141	Hardness		253.	
1028	101	Iron		<0.10	
1031	101	Magnesium		26.2	
1032	101	Manganese		<0.02	
1925	135	pH		7.9	
1052	101	Sodium		35.	
1055	137	Sulfate		153.	
1930	139	TDS		502.	
1095	101	Zinc		0.2	

(10-13) (14-16) (17-20)

Pursuant to R9-8-223 check samples are REQUIRED for ANY and ALL contaminant(s) checked in the exceeds column.

LOCATION CODE (28-30)

000125

ANALYSIS DATE (22-27): Mo. 06 | Day 29 | Yr. 84

COMMENTS

Beth Atkinson
ANALYST

Gary Windzoos

TOMBSTONE EXPLORATION, INC.

July 24, 1984

State Mine Inspector
750 Capitol Tower
Phoenix, Arizona 85007

Attention: Mr. Eddie Martin

Dear Mr. Martin:

The following is a report on Tombstone Exploration, Inc. well water samples for the week of July 16 - 22, 1984 and the City of Tombstone well water samples for July 18 and 19, 1984.

TOMBSTONE EXPLORATION, INC.

The following are readings for free cyanide measured in pounds/ton:

DATE	WELL NO. 1	WELL NO. 2	WELL NO. 3
7-16-84	Nil	.147	Nil
7-17-84	Nil	.132	Nil
7-18-84	Nil	.141	Nil
7-19-84	Nil	.141	Nil
7-20-84*	Nil	pump down for repair	Nil
7-21-84	Nil	.141	Nil
7-22-84	Nil	.126	Nil

* On Friday, July 20, 1984, Well No.. 2 pump was down for repairs

Spray pond was treated with 40 pounds lime, 400 pounds Calcium Hypochlorite and 4000 gallons of fresh water in an attempt to neutralize CN from the source of the leak.

000126

17 East 76th Street
New York, New York 10021
212-628-8466

P.O. Box 610
Tombstone, Arizona 85638
602-457-2231

TOMBSTONE EXPLORATION, INC.

STATE MINE INSPECTOR
PAGE II

Tap water from the Plant and Lab at T.E.I. have been run seven days per week and has always had a nil reading for cyanide.

CITY OF TOMBSTONE

DATE	CITY WELL NO. 1	CITY WELL NO. 2	CITY WELL NO. 3
7-18	nil	nil	nil
7-19	nil	nil	nil

If you have any questions concerning this report please contact Mr. Gary Lindroos or myself at the Tombstone address/phone listed below.

Sincerely,

TOMBSTONE EXPLORATION, INC.

Bob G. Lee
General Manager

BGL/ckc

cc: Mr. Alex Gradillas, Mayor of Tombstone
Mr. Joe Perotti, City of Tombstone
Mr. Thomas H. Schloss, Tombstone Exploration, Inc.
Mr. Dustin L. Escapule, Tombstone Exploration, Inc.

000127

17 East 76th Street
New York, New York 10021
212-628-8466

P.O. Box 610
Tombstone, Arizona 85638
602-457-2231

GARY

TOMBSTONE EXPLORATION, INC.

August 1, 1984

State Mine Inspector
750 Captiol Tower
Phoenix, Arizona 85007

Attention: Mr. Eddie Martin

Dear Mr. Martin:

The following is a report on Tombstone Exploration, Inc. well water samples for the period of July 23, 1984 - July 31, 1984.

The following readings for free cyanide are reported in pounds/tons:

DATE	WELL No. 1	WELL No. 2	WELL No. 3
7-23-84	nil	.120	nil
7-24-84	nil	.126	nil
7-25-84	nil	.126	nil
7-26-84	nil	.118	nil
7-27-84	nil	.116	nil
7-28-84	nil	.114	nil
7-29-84	nil	.112	nil
7-30-84	nil	.100	nil
7-31-84	nil	.105	nil

The spray pond was treated with an additional 40 pounds of lime and 200 pounds of Calcium Hypochlorite.

Tap water from the Lab and Plant (which are on the City of Tombstone line) were checked daily and had a nil reading for cyanide.

No water samples from the City of Tombstone were received during this time period.

Sincerely,

TOMBSTONE EXPLORATION, INC.

Bob G. Lee
General Manager

BGL/ckc

cc: Mr. Alex Gradillas, Mayor of Tombstone
Mr. Joe Perotti Sr, City of Tombstone
Mr. Thomas Schloss, Tombstone Exploration, Inc.
Mr. Dustin L. Escapule, Tombstone Exploration, Inc.

000128

17 East 76th Street
New York, New York 10021
212-628-8466

P.O. Box 610
Tombstone, Arizona 85638
602-457-2231

Below are the daily analysis for free cyanide reported in pounds / Ton.

Date	Well #1	Well #2	Well #3
8-1-84	N.L	.100	N.L
8-2-84	N.L	.100	N.L
8-3-84	N.L	.100	N.L
8-4-84	N.L	.094	N.L
8-5-84	N.L	.094	N.L
8-6-84	N.L	.091	N.L
8-7-84	N.L	.086	N.L
8-8-84	N.L	.090	N.L
8-9-84	N.L	.077	N.L
8-10-84	N.L	.075	N.L

City of Tombstone water was checked daily from Lab and plant taps. Also samples were taken direct from all city wells August 2, 1984 and August 3, 1984. All tests showed no free cyanide.

TOMBSTONE EXPLORATION, INC.

August 31, 1984

Mr. Eddie Martin
State Mine Inspector
750 Capitol Tower
Phoenix, Arizona 85007

Dear Mr. Martin:

The following is a report on Tombstone Exploration, Inc. well water samples for the period of August 25 - August 31, 1984.

The following readings for free cyanide are reported in pounds/ton:

DATE	WELL No.1	WELL No.2	WELL No.3	PLANT*	LAB*
8-25-84	nil	.034	nil	nil	nil
8-26-84	nil	.034	nil	nil	nil
8-27-84	nil	.036	nil	nil	nil
8-28-84	nil	.038	nil	nil	nil
8-29-84	nil	.036	nil	nil	nil
8-30-84	nil	.036	nil	nil	nil
8-31-84	nil	.034	nil	nil	nil

* Plant and Lab tap water source is City of Tombstone

If you have any questions concerning this report, please feel free to contact me at the Tombstone phone number/address listed below. Thank you.

Sincerely,

TOMBSTONE EXPLORATION, INC.

Bob G. Lee
General Manager

BGL/ckc

000130

cc: Mr. Alex Gradillas, Mayor of Tombstone
Mr. Joe Perotti Sr, Director of Public Works, City of Tombstone
Mr. Thomas Schloss, President, Tombstone Exploration, Inc.
Mr. Dustin Escapule, Vice President, Tombstone Exploration, Inc.

17 East 76th Street
New York, New York 10021
212-628-2366

P.O. Box 610
Tombstone, Arizona 85638
602-457-2231

TOMBSTONE EXPLORATION, INC.

September 10, 1984

Mr. Eddie Martin
State Mine Inspector
750 Capitol Tower
Phoenix, Arizona 85007

Dear Mr. Martin:

The following is a report on Tombstone Exploration, Inc. well water samples for the period of September 1 - September 7, 1984.

The following readings for free cyanide are reported in pounds/ton:

DATE	WELL No.1	WELL No.2	WELL No.3	PLANT*	LAB*
9-1-84	nil	.034	nil	nil	nil
9-2-84	nil	.029	nil	nil	nil
9-3-84	nil	.032	nil	nil	nil
9-4-84	nil	.023	nil	nil	nil
9-5-84	nil	.028	nil	nil	nil
9-6-84	nil	.030	nil	nil	nil
9-7-84	nil	.028	nil	nil	nil

* Plant and Lab taps water source is from the City of Tombstone

If you have any questions concerning this report, please feel free to contact me at the Tombstone phone number/address listed below. Thank you.

Sincerely,

TOMBSTONE EXPLORATION, INC.

Bob G. Lee
General Manager

BGL/ccr

000131

cc: Mr. Alex Gradillas, Mayor of Tombstone
Mr. Joe Perotti Sr, Director of Public Works, City of Tombstone
Mr. Thomas Schloss, President, Tombstone Exploration, Inc.
Mr. Dustin Escapule, Vice President, Tombstone Exploration, Inc.

17 East 76th Street
New York, New York 10021
212-628-8156

P.O. Box 610
Tombstone, Arizona 85638
602-457-2231

TOMBSTONE EXPLORATION, INC.

September 17, 1984

Mr. Eddie Martin
State Mine Inspector
750 Capitol Tower
Phoenix, Arizona 8500

Dear Mr. Martin:

The following is a report on Tombstone Exploration, Inc. well water samples for the period of September 8 - September 14, 1984.

The following readings for free cyanide are reported in pounds/ton:

DATE	WELL NO.1	WELL NO.2	WELL NO.3	PLANT*	LAB*
9-8-84	nil	.028	nil	nil	nil
9-9-84	nil	.026	nil	nil	nil
9-10-84	nil	.026	nil	nil	nil
9-11-84	nil	.032	nil	nil	nil
9-12-84	nil	.032	nil	nil	nil
9-13-84	nil	.018	nil	nil	nil
9-14-84	nil	.022	nil	nil	nil

* Plant and Lab water source is from the City of Tombstone

If you have any questions concerning this report, please feel free to contact me at the Tombstone phone number/address listed below. Thank you.

Sincerely,

TOMBSTONE EXPLORATION, INC.

Bob G. Lee
General Manager

BGL/cr

000132

cc: Mr. Alex Gradillas, Mayor of Tombstone
Mr. Joe Perotti Sr., Director of Public Works, City of Tombstone
Mr. Thomas Schloss, President, Tombstone Exploration, Inc.
Mr. Dustin Escapule, Vice President, Tombstone Exploration, Inc.

17 East 76th Street
New York, New York 10021
212-628-8166

P.O. Box 610
Tombstone, Arizona 85638
[illegible]

TOMBSTONE EXPLORATION, INC.

September 21, 1984

Mr. Eddie Martin
State Mine Inspector
750 Capitol Tower
Phoenix, Arizona 85007

Dear Mr. Martin:

The following report is on Tombstone Exploration, Inc. well water samples for the period of September 15 - September 21, 1984.

The following readings for free cyanide are reported in pounds/ton:

DATE	WELL NO.1	WELL NO.2	WELL NO.3	PLANT*	LAB*
9-15-84	nil	.028	nil	nil	nil
9-16-84	nil	.026	nil	nil	nil
9-17-84	nil	.028	nil	nil	nil
9-18-84	nil	.024	nil	nil	nil
9-19-84	nil	.022	nil	nil	nil
9-20-84	nil	.022	nil	nil	nil
9-21-84	nil	.022	nil	nil	nil

* Plant and Lab water source is from the City of Tombstone

If you have any questions concerning this report, please feel free to contact me at the Tombstone phone number/address listed below. Thank you.

Sincerely,

TOMBSTONE EXPLORATION, INC.

Bob G. Lee
General Manager

BGL/ccr

000133

cc: Mr. Alex Gradillas, Mayor of Tombstone
Mr. Joe Perotti Sr, Director of Public Works, City of Tombstone
Mr. Thomas Schloss, President, Tombstone Exploration, Inc.
Mr. Dustin Escapule, Vice President, Tombstone Exploration, Inc.

17 East 76th Street
New York, New York 10021
212-628-8456

P.O. Box 610
Tombstone, Arizona 85638
602-457-2231

TOMBSTONE EXPLORATION, INC.

September 28, 1984

Mr. Eddie Martin
State Mine Inspector
750 Capitol Tower
Phoenix, Arizona 85007

Dear Mr. Martin:

The following report is on Tombstone Exploration, Inc. well water samples for the period of September 22 - 28, 1984.

The following readings for free cyanide are reported in pounds/ton:

DATE	WELL NO.1	WELL NO.2	WELL NO.3	PLANT*	LAB*
9-22-84	nil	.022	nil	nil	nil
9-23-84	nil	.020	nil	nil	nil
9-24-84	nil	.020	nil	nil	nil
9-25-84	nil	.020	nil	nil	nil
9-26-84	nil	.018	nil	nil	nil
9-27-84	nil	.018	nil	nil	nil
9-28-84	nil	.022	nil	nil	nil

* Plant and Lab water source is from the City of Tombstone

If you have any questions concerning this report, please feel free to contact me at the Tombstone phone number/address listed below. Thank you.

Sincerely,

TOMBSTONE EXPLORATION, INC.

Bob G. Lee
General Manager

BGL/ccr

000134

cc: Mr. Alex Gradillas, Mayor of Tombstone
Mr. Joe Perotti Sr, Director of Public Works, City of Tombstone
Mr. Thomas Schloss, President, Tombstone Exploration, Inc.
Mr. Dustin Escapule, Vice President, Tombstone Exploration, Inc.

17 East 76th Street
New York, New York 10021
212-628-8466

P.O. Box 610
Tombstone, Arizona 85638
602-457-2231

TOMBSTONE EXPLORATION, INC.

October 5, 1984

Mr. Eddie Martin
State Mine Inspector
750 Capitol Tower
Phoenix, Arizona 85007

Dear Mr. Martin:

The following report is on Tombstone Exploration, Inc. well water samples for the period of September 29 - October 5, 1984.

The following readings for free cyanide are reported in pounds/ton:

DATE	WELL NO.1	WELL NO.2	WELL NO.3	PLANT*	LAB*
9-29-84	nil	.020	nil	nil	nil
9-30-84	nil	.020	nil	nil	nil
10-1-84	nil	.018	nil	nil	nil
10-2-84	nil	.014	nil	nil	nil
10-3-84	nil	pump down for repair	nil	nil	nil
10-4-84	nil	.022	nil	nil	nil
10-5-84	nil	.018	nil	nil	nil

* Plant and Lab water source is from the City of Tombstone

If you have any questions concerning this report, please feel free to contact me at the Tombstone phone number/address listed below. Thank you.

Sincerely,

TOMBSTONE EXPLORATION, INC.

Bob G. Lee
General Manager

BGL/ccr

000135

cc: Mr. Alex Gradillas, Mayor of Tombstone, City of Tombstone
Mr. Joe Perotti Sr, Director of Public Works, City of Tombstone
Mr. Thomas Schloss, President, Tombstone Exploration, Inc.
Mr. Dustin Escapule, Vice President, Tombstone Exploration, Inc.

17 East 76th Street
New York, New York 10021
212-628-8466

P.O. Box 610
Tombstone, Arizona 85638
602-457-2231

WESTERN TECHNOLOGIES INC.

3737 East Broadway Road
P.O. Box 21387
Phoenix, Arizona 85036
(602) 437-3737

LABORATORY REPORT

Client: Tombstone Exploration, Inc.
P. O. Box 610
Tombstone, Arizona 85638
Attn: Gary A. Lindroos

Job No. --
Lab./Invoice No. 22140742
Date of Report 10/17/84
Reviewed By Steven P. Hoppe

Project --
Location --
Material/Specimen Water — Sampled By TEI/personnel — Date --
Source -- — Submitted By TEI/personnel — Date --
Test Procedure Std. Methods 412D — Authorized By -- — Date --

RESULTS

Three water samples were received for analysis of free and total cyanide. The results of these analysis are as follows:

Sample Identification	Free Cyanide mg/L	Total Cyanide mg/L
#1	<0.05	<0.01
#2	<0.05	<0.01
#3	<0.05	<0.01

Copies to: Client (3)
City of Tombstone (1)
State Bureau of Water Quality Control (1)

WESTERN TECHNOLOGIES INC.

3737 East Broadway Road
P.O. Box 21387
Phoenix, Arizona 85036
(602) 437-3737

LABORATORY REPORT

Client: Tombstone Exploration, Inc.
P. O. Box 610
Tombstone, Arizona 85638
Attn: Gary A. Lindroos

Job No. 840002-004
Lab./Invoice No. 22140757
Date of Report 10/17/84
Reviewed By Steven P. Hoppe

Project --
Location --
Material/Specimen Water — Sampled By TEI/personnel — Date --
Source -- — Submitted By TEI/personnel — Date 8/03/84
Test Procedure Std. Methods 412D — Authorized By -- — Date --

RESULTS

Three water samples were received for analysis of free and total cyanide. The results of these analysis are as follows:

Sample Identification	Free Cyanide mg/L	Total Cyanide mg/L
#1 840002	<0.05	<0.01
#2 840003	<0.05	<0.01
#3 840004	<0.05	<0.01

Copies to: Client (3)
State Mine Inspector (1)
Arizona Dept. of Health Services (1)

TOMBSTONE EXPLORATION, INC.

October 19, 1984

Mr. Eddie Martin
State Mine Inspector
750 Capitol Tower
Phoenix, Arizona 85007

Dear Mr. Martin:

The following report is on Tombstone Exploration, Inc. well water samples for the period of October 14 - 19, 1984.

The following readings for free cyanide are reported in pounds/ton:

DATE	WELL No.1	WELL No.2	WELL No.3	PLANT*	LAB*
10-14-84	nil	.014	nil	nil	nil
10-15-84	nil	.011	nil	nil	nil
10-16-84	nil	.006	nil	nil	nil
10-17-84	nil	.011	nil	nil	nil
10-18-84	nil	.014	nil	nil	nil
10-19-84	nil	.011	nil	nil	nil

* Plant and Lab waster source is from the City of Tombstone

If you have any questions concerning this report, please feel free to contact me at the Tombstone phone number/address listed below. Thank you.

Sincerely,

TOMBSTONE EXPLORATION, INC.

Bob G. Lee
General Manager

000138

BGL/ccr

cc: Mr. Alex Gradillas, Mayor of Tombstone, City of Tombstone
Mr. Joe Perotti Sr., Director of Public Works, City of Tombstone
Mr. Thomas Schloss, President, Tombstone Exploration, Inc.
Mr. Dustin Escapule, Vice President, Tombstone Exploration, Inc.

17 East 76th Street
New York, New York 10021
212-628-8166

P.O. Box 610
Tombstone, Arizona 85638
602-457-2231

TOMBSTONE EXPLORATION, INC.

October 29, 1984

Mr. Eddie Martin
State Mine Inspector
750 Capitol Tower
Phoenix, Arizona 85007

Dear Mr. Martin:

The following report is on Tombstone Exploration, Inc. well water samples for the period of October 20 - 26, 1984.

The following readings for free cyanide are reported in pounds/ton:

DATE	WELL No.1	WELL No.2	WELL No.3	PLANT*	LAB*
10-20-84	nil	.013	nil	nil	nil
10-21-84	nil	.011	nil	nil	nil
10-22-84	nil	.015	nil	nil	nil
10-23-84	nil	.017	nil	nil	nil
10-24-84	nil	.010	nil	nil	nil
10-25-84	nil	.010	nil	nil	nil
10-26-84	nil	.011	nil	nil	nil

* Plant and Lab source is from the City of Tombstone

If you have any questions concerning this report, please feel free to contact me at the Tombstone phone number/address listed below. Thank you.

Sincerely,

TOMBSTONE EXPLORATION, INC.

Bob G. Lee
General Manager

000139

BGL/ccr

cc: Mr. Alex Gradillas, Mayor of Tombstone, City of Tombstone
Mr. Joe Perotti Sr, Director of Public Works, City of Tombstone
Mr. Thomas Schloss, President, Tombstone Exploration, Inc.
Mr. Dustin Escapule, Vice President, Tombstone Exploration, Inc.

17 East 76th Street
New York, New York 10021
212-628-8166

P.O. Box 610
Tombstone, Arizona 85638
602-457-2231

11-9-84

Eddie ~~Martin~~ MARTIN
State Mine Inspecton

	Well No 1	Well No. 2	Well No. 3	PLANT *	LAB *
11-3-84	Nil	.012	Nil	Nil	Nil
11-4-84	Nil	.010			
11-5-84	Nil	.010			
11-6-84	Nil	.010			
11-7-84	Nil	.012			
11-8-84	Nil	.012			
11-9-84	Nil	.012			

000140

169001
TEI Well No 1
SPECIMEN NO.

Groundwater Quality Protection Permit
Self-Monitoring Report Form
Arizona Department of Health Services

2-9-87
DATE REC'D AT LAB

Lab Name & Address — LAB ID NO. 00002

Arizona Testing Laboratories
817 West Madison Street
Phoenix, Arizona 85007

ADHS Permit No. G-0011-02

Sample Location Cochise Silver Mines Tombstone, ARIZONA

Facility Name & Mailing Address

Cochise Silver Mines, Inc.
P. O. Box 158
Tombstone, Arizona 85638

SAMPLE COLLECTION INFORMATION

☒ Groundwater ☐ Vadose ☐ Waste Stream ☐ Pond
☐ Other

Sample Date 2-6-87 Sample Time 11:10

Depth to Water _____ Feet below land surface
(Groundwater Samples Only)

Parameter Code: P72019

Collected By: Gary Lindsay

ADHS Use Only

S C ,

Parameter Name*	Storet Parameter Number	Laboratory Analysis Results	Parameter Name*	Storet Parameter Number	Laboratory Analysis Results
Arsenic +	P01002,	. ,	Endrin[a]	P39390,	. ,
Barium +	P01007,	. ,	Lindane[a]	P39782,	. ,
Cadmium +	P01027,	. ,	MethoxyChlor[a]	P39480,	. ,
Chromium +	P01034,	. ,	Toxaphene[a]	P39400,	. ,
Lead +	P01051,	. ,	2,4-D[a]	P39730,	. ,
Mercury +	P71900,	< 0.001 ,	2,4,5-TP Silvex[a]	P39045,	. ,
Nitrate(N)	P00620,	2.9 ,	TTHM[a]	P82080,	. ,
Selenium +	P01147,	. ,		,	. ,
Silver +	P01077,	. ,	Free Cyanide, mg/l	,	< 0.01 ,
Fluoride	P00951,	. ,	Total Cyanide, mg/L	,	< 0.01 ,
	,	. ,		,	. ,
Alkalinity	P00410,	. ,		,	. ,
Calcium	P00916,	. ,		,	. ,
Chloride	P00940,	. ,		,	. ,
Copper +	P01042,	. ,		,	. ,
Hardness	P00900,	. ,	Radium-226/228[b]	P11503,	. ,
Iron +	P01045,	. ,	Gross Alpha, Tot[b]	P01501,	. ,
Magnesium	P00927,	. ,	— Count Error[b]	P01502,	. ,
Manganese +	P01055,	. ,	Beta Activity[b]	P03501,	. ,
pH	P00403,	. ,	Cesium-134[b]	P28414,	. ,
Sodium	P00929,	. ,	Iodine-131[b]	P28301,	. ,
Sulfate	P00945,	. ,	Strontium-90/89[b]	P01082,	. ,
TDS	P00500,	. ,	Tritium[b]	P82126,	. ,
Zinc +	P01092,	. ,	Uranium[b]	P22706,	. ,

*Units are mg/l unless otherwise noted.

[a]Units are µg/l
[b]Units are pCi/l

cc: Dir. of Public Works, Tombstone, AZ

< = less than

Send 3 copies of completed form to:
Arizona Department of Health Services
Office of Waste and Water Quality Mgmt.
Compliance Section
Room 304
2005 North Central
Phoenix, Arizona 85004

Comments: _____

Analysis Date 2-18-87

Analyst RAD

000141

TEI Well No. 2
SPECIMEN NO.

Self-Monitoring Report Form
Arizona Department of Health Services

2-9-87
DATE REC'D AT LAB

Lab Name & Address — LAB ID NO. 00002

Arizona Testing Laboratories
817 West Madison Street
Phoenix, Arizona 85007

ADHS Permit No. G-0011-02

Sample Location: Cochise Silver Mines, Tombstone, Arizona

Facility Name & Mailing Address

Cochise, Silver Mines, Inc.
P. O. Box 158
Tombstone, Arizona 85638

SAMPLE COLLECTION INFORMATION

☒ Groundwater ☐ Vadose ☐ Waste Stream ☐ Pond
☐ Other

Sample Date: 2-6-87 Sample Time: 11:25

Depth to Water _____ Feet below land surface
(Groundwater Samples Only)

Parameter Code: P72019

Collected By: Gary Lindsey

ADHS Use Only

SC.

Parameter Name*	Storet Parameter Number	Laboratory Analysis Results	Parameter Name*	Storet Parameter Number	Laboratory Analysis Results
Arsenic +	P01002,	. ,	Endrin[a]	P39390,	. ,
Barium +	P01007,	. ,	Lindane[a]	P39782,	. ,
Cadmium +	P01027,	. ,	MethoxyChlor[a]	P39480,	. ,
Chromium +	P01034,	. ,	Toxaphene[a]	P39400,	. ,
Lead +	P01051,	. ,	2,4-D[a]	P39730,	. ,
Mercury +	P71900,	0.022 ,	2,4,5-TP Silvex[a]	P39045,	. ,
Nitrate (N)	P00620,	28. ,	TTHM[a]	P82080,	. ,
Selenium +	P01147,	. ,		,	. ,
Silver +	P01077,	. ,	Free Cyanide, mg/L	,	0.06 ,
Fluoride	P00951,	. ,	Total Cyanide, mg/L	,	0.27 ,
	,	. ,		,	. ,
Alkalinity	P00410,	. ,		,	. ,
Calcium	P00916,	. ,		,	. ,
Chloride	P00940,	. ,		,	. ,
Copper +	P01042,	. ,		,	. ,
Hardness	P00900,	. ,	Radium-226/228[b]	P11503,	. ,
Iron +	P01045,	. ,	Gross Alpha, Tot[b]	P01501,	. ,
Magnesium	P00927,	. ,	— Count Error[b]	P01502,	. ,
Manganese +	P01055,	. ,	Beta Activity[b]	P03501,	. ,
pH	P00403,	. ,	Cesium-134[b]	P28414,	. ,
Sodium	P00929,	. ,	Iodine-131[b]	P28301,	. ,
Sulfate	P00945,	. ,	Strontium-90/89[b]	P01082,	. ,
TDS	P00500,	. ,	Tritium[b]	P82126,	. ,
Zinc +	P01092,	. ,	Uranium[b]	P22706,	. ,

*Units are mg/l unless otherwise noted.

[a]Units are μg/l
[b]Units are pCi/l

cc: Dir. of Public Works, Tombstone, AZ

Send 3 copies of completed form to:
Arizona Department of Health Services
Office of Waste and Water Quality Mgmt.
Compliance Section
Room 304
2005 North Central
Phoenix, Arizona 85004

Comments: _____

Analysis Date: 2-18-87

Analyst: [illegible]

000142

169000
Tombstone City Well No. 1
SPECIMEN NO.

Self-Monitoring Report Form
Arizona Department of Health Services

2-9-87
DATE REC'D AT LAB

Lab Name & Address — LAB ID NO. 00002

Arizona Testing Laboratories
817 West Madison Street
Phoenix, Arizona 85007

ADHS Permit No. G-0011-02

Sample Location Cochise Silver Mines
Tombstone, Arizona

Facility Name & Mailing Address

Cochise Silver Mines, Inc.
P. O. Box 158
Tombstone, Arizona 85638

SAMPLE COLLECTION INFORMATION

☒ Groundwater ☐ Vadose ☐ Waste Stream ☐ Pond
☐ Other

Sample Date 2-6-87 Sample Time 11:55

Depth to Water _____ Feet below land surface
(Groundwater Samples Only)

Parameter Code: P72019

Collected By: [signature]

ADHS Use Only

S C .

Parameter Name*	Storet Parameter Number	Laboratory Analysis Results	Parameter Name*	Storet Parameter Number	Laboratory Analysis Results
Arsenic +	P01002,	. ,	Endrin[a]	P39390,	. ,
Barium +	P01007,	. ,	Lindane[a]	P39782,	. ,
Cadmium +	P01027,	. ,	MethoxyChlor[a]	P39480,	. ,
Chromium +	P01034,	. ,	Toxaphene[a]	P39400,	. ,
Lead +	P01051,	. ,	2,4-D[a]	P39730,	. ,
Mercury +	P71900,	< 0.001 ,	2,4,5-TP Silvex[a]	P39045,	. ,
Nitrate (N)	P00620,	10.5 ,	TTHM[a]	P82080,	. ,
Selenium +	P01147,	. ,		,	. ,
Silver +	P01077,	. ,	Free Cyanide, mg/L	,	< 0.01 ,
Fluoride	P00951,	. ,	Total Cyanide, mg/L	,	< 0.01 ,
	,	. ,		,	. ,
Alkalinity	P00410,	. ,		,	. ,
Calcium	P00916,	. ,		,	. ,
Chloride	P00940,	. ,		,	. ,
Copper +	P01042,	. ,		,	. ,
Hardness	P00900,	. ,	Radium-226/228[b]	P11503,	. ,
Iron +	P01045,	. ,	Gross Alpha, Tot[b]	P01501,	. ,
Magnesium	P00927,	. ,	— Count Error[b]	P01502,	. ,
Manganese +	P01055,	. ,	Beta Activity[b]	P03501,	. ,
pH	P00403,	. ,	Cesium-134[b]	P28414,	. ,
Sodium	P00929,	. ,	Iodine-131[b]	P28301,	. ,
Sulfate	P00945,	. ,	Strontium-90/89[b]	P01082,	. ,
TDS	P00500,	. ,	Tritium[b]	P82126,	. ,
Zinc +	P01092,	. ,	Uranium[b]	P22706,	. ,

*Units are mg/l unless otherwise noted.
[a]Units are µg/l
[b]Units are pCi/l

cc: Dir. of Public Works, Tombstone, AZ

< = less than

Send 3 copies of completed form to:
Arizona Department of Health Services
Office of Waste and Water Quality Mgmt.
Compliance Section
Room 304
2005 North Central
Phoenix, Arizona 85004

Comments: _____

Analysis Date 2-18-87

Analyst [signature]

000143

169003
Tombstone City Tap Water
SPECIMEN NO.

Self-Monitoring Report Form
Arizona Department of Health Services

2-9-87
DATE REC'D AT LAB

Lab Name & Address — LAB ID NO. 00002

Arizona Testing Laboratories
817 West Madison Street
Phoenix, Arizona 85007

ADHS Permit No. G0011-02

Sample Location: Cochise Silver Mines, Tombstone, Arizona

Facility Name & Mailing Address

Cochise Silver Mines, Inc.
P. O. Box 158
Tombstone, Arizona 85638

SAMPLE COLLECTION INFORMATION

☒ Groundwater ☐ Vadose ☐ Waste Stream ☐ Pond
☐ Other

Sample Date 7-6-87 Sample Time 12:45

Depth to Water _____ Feet below land surface
(Groundwater Samples Only)

Parameter Code: P72019

Collected By: [signature]

ADHS Use Only

S C .

Parameter Name*	Storet Parameter Number	Laboratory Analysis Results	Parameter Name*	Storet Parameter Number	Laboratory Analysis Results
Arsenic +	P01002,	. ,	Endrin[a]	P39390,	. ,
Barium +	P01007,	. ,	Lindane[a]	P39782,	. ,
Cadmium +	P01027,	. ,	MethoxyChlor[a]	P39480,	. ,
Chromium +	P01034,	. ,	Toxaphene[a]	P39400,	. ,
Lead +	P01051,	. ,	2,4-D[a]	P39730,	. ,
Mercury +	P71900,	< 0.001 ,	2,4,5-TP Silvex[a]	P39045,	. ,
Nitrate(N)	P00620,	5.7 ,	TTHM[a]	P82080,	. ,
Selenium +	P01147,	. ,		,	. ,
Silver +	P01077,	. ,	Free Cyanide, mg/L	,	< 0.01 ,
Fluoride	P00951,	. ,	Total Cyanide, mg/L	,	< 0.01 ,
	,	. ,		,	. ,
Alkalinity	P00410,	. ,		,	. ,
Calcium	P00916,	. ,		,	. ,
Chloride	P00940,	. ,		,	. ,
Copper +	P01042,	. ,		,	. ,
Hardness	P00900,	. ,	Radium-226/228[b]	P11503,	. ,
Iron +	P01045,	. ,	Gross Alpha, Tot[b]	P01501,	. ,
Magnesium	P00927,	. ,	— Count Error[b]	P01502,	. ,
Manganese +	P01055,	. ,	Beta Activity[b]	P03501,	. ,
pH	P00403,	. ,	Cesium-134[b]	P28414,	. ,
Sodium	P00929,	. ,	Iodine-131[b]	P28301,	. ,
Sulfate	P00945,	. ,	Strontium-90/89[b]	P01082,	. ,
TDS	P00500,	. ,	Tritium[b]	P82126,	. ,
Zinc +	P01092,	. ,	Uranium[b]	P22706,	. ,

*Units are mg/l unless otherwise noted.
< = less than
[a]Units are μg/l
[b]Units are pCi/l

cc: Dir. of Public Works, Tombstone, AZ

Send 3 copies of completed form to:
Arizona Department of Health Services
Office of Waste and Water Quality Mgmt.
Compliance Section
Room 304
2005 North Central
Phoenix, Arizona 85004

Comments: _____

Analysis Date 2-18-87
Analyst RAO

000144

TEI Well No. 1
SPECIMEN NO.

Self-Monitoring Report Form
Arizona Department of Health Services

3-13-87
DATE REC'D AT LAB

Lab Name & Address — LAB ID NO. 00002

Arizona Testing Laboratories
817 West Madison Street
Phoenix, Arizona 85007

ADHS Permit No. G-0011-02

Sample Location TEI Well No. 1

Facility Name & Mailing Address

Cochise Silver Mines, Inc.
P. O. Box 158
Tombstone, Arizona 85638

SAMPLE COLLECTION INFORMATION

☒ Groundwater ☐ Vadose ☐ Waste Stream ☐ Pond
☐ Other

Sample Date 3-13-87 Sample Time 11:45 A.M.
Depth to Water 518 Feet below land surface
(Groundwater Samples Only)
Parameter Code: P72019

Collected By:

ADHS Use Only

S C .

Parameter Name*	Storet Parameter Number	Laboratory Analysis Results
Arsenic +	P01002,	. ,
Barium +	P01007,	. ,
Cadmium +	P01027,	. ,
Chromium +	P01034,	. ,
Lead +	P01051,	. ,
Mercury +	P71900,	< 0.001 ,
Nitrate(N)	P00620,	3.0 ,
Selenium +	P01147,	. ,
Silver +	P01077,	. ,
Fluoride	P00951,	. ,
	,	. ,
Alkalinity	P00410,	. ,
Calcium	P00916,	. ,
Chloride	P00940,	. ,
Copper +	P01042,	. ,
Hardness	P00900,	. ,
Iron +	P01045,	. ,
Magnesium	P00927,	. ,
Manganese +	P01055,	. ,
pH	P00403,	. ,
Sodium	P00929,	. ,
Sulfate	P00945,	. ,
TDS	P00500,	. ,
Zinc +	P01092,	. ,

Parameter Name*	Storet Parameter Number	Laboratory Analysis Results
Endrin[a]	P39390,	. ,
Lindane[a]	P39782,	. ,
MethoxyChlor[a]	P39480,	. ,
Toxaphene[a]	P39400,	. ,
2,4-D[a]	P39730,	. ,
2,4,5-TP Silvex[a]	P39045,	. ,
TTHM[a]	P82080,	. ,
Free Cyanide, mg/L	,	< 0.01 ,
Total Cyanide, mg/L	,	< 0.01 ,
	,	. ,
	,	. ,
	,	. ,
	,	. ,
	,	. ,
	,	. ,
Radium-226/228[b]	P11503,	. ,
Gross Alpha, Tot[b]	P01501,	. ,
— Count Error[b]	P01502,	. ,
Beta Activity[b]	P03501,	. ,
Cesium-134[b]	P28414,	. ,
Iodine-131[b]	P28301,	. ,
Strontium-90/89[b]	P01082,	. ,
Tritium[b]	P82126,	. ,
Uranium[b]	P22706,	. ,

*Units are mg/l unless otherwise noted. < = less than
[a]Units are μg/l
[b]Units are pCi/l

cc: Dir. of Public Works, Tombstone, AZ

Send 3 copies of completed form to:
Arizona Department of Health Services
Office of Waste and Water Quality Mgmt.
Compliance Section
Room 304
2005 North Central
Phoenix, Arizona 85004

Comments:

Analysis Date 4-6-87
Analyst [illegible]

000145

226001
TEI Well No. 2
SPECIMEN NO.

Self-Monitoring Report Form
Arizona Department of Health Services

3-13-87
DATE REC'D AT LAB

Lab Name & Address — LAB ID NO. 00002

Arizona Testing Laboratories
817 West Madison Street
Phoenix, Arizona 85007

ADHS Permit No. G-0011-02

Sample Location TEI Well No. 2

Facility Name & Mailing Address

Cochise Silver Mines, Inc.
P. O. Box 158
Tombstone, Arizona 85638

SAMPLE COLLECTION INFORMATION

☒ Groundwater ☐ Vadose ☐ Waste Stream ☐ Pond
☐ Other

Sample Date 3-13-87 Sample Time 11:30 A.M.

Depth to Water 53 Feet below land surface
(Groundwater Samples Only)

Parameter Code: P72019

Collected By:

ADHS Use Only

S C .

Parameter Name*	Storet Parameter Number	Laboratory Analysis Results	Parameter Name*	Storet Parameter Number	Laboratory Analysis Results
Arsenic +	P01002,	. ,	Endrin[a]	P39390,	. ,
Barium +	P01007,	. ,	Lindane[a]	P39782,	. ,
Cadmium +	P01027,	. ,	MethoxyChlor[a]	P39480,	. ,
Chromium +	P01034,	. ,	Toxaphene[a]	P39400,	. ,
Lead +	P01051,	. ,	2,4-D[a]	P39730,	. ,
Mercury +	P71900,	0.025 ,	2,4,5-TP Silvex[a]	P39045,	. ,
Nitrate (N)	P00620,	25. ,	TTHM[a]	P82080,	. ,
Selenium +	P01147,	. ,	Free Cyanide, mg/L	,	0.01 ,
Silver +	P01077,	. ,	Total Cyanide, mg/L	,	0.16 ,
Fluoride	P00951,	. ,		,	. ,
	,	. ,		,	. ,
Alkalinity	P00410,	. ,		,	. ,
Calcium	P00916,	. ,		,	. ,
Chloride	P00940,	. ,		,	. ,
Copper +	P01042,	. ,		,	. ,
Hardness	P00900,	. ,	Radium-226/228[b]	P11503,	. ,
Iron +	P01045,	. ,	Gross Alpha, Tot[b]	P01501,	. ,
Magnesium	P00927,	. ,	— Count Error[b]	P01502,	. ,
Manganese +	P01055,	. ,	Beta Activity[b]	P03501,	. ,
pH	P00403,	. ,	Cesium-134[b]	P28414,	. ,
Sodium	P00929,	. ,	Iodine-131[b]	P28301,	. ,
Sulfate	P00945,	. ,	Strontium-90/89[b]	P01082,	. ,
TDS	P00500,	. ,	Tritium[b]	P82126,	. ,
Zinc +	P01092,	. ,	Uranium[b]	P22706,	. ,

*Units are mg/l unless otherwise noted.
[a]Units are μg/l
[b]Units are pCi/l

cc: Dir. of Public Works, Tombstone, AZ

Send 3 copies of completed form to:
Arizona Department of Health Services
Office of Waste and Water Quality Mgmt.
Compliance Section
Room 304
2005 North Central
Phoenix, Arizona 85004

Comments:

Analysis Date 4-6-87
Analyst

000146

220003
Tombstone City Well No. 1
SPECIMEN NO.

Self-Monitoring Report Form
Arizona Department of Health Services

3-13-87
DATE REC'D AT LAB

Lab Name & Address — LAB ID NO. 00002

Arizona Testing Laboratories
817 West Madison Street
Phoenix, Arizona 85007

ADHS Permit No. G-0011-02

Sample Location Tombstone City Well No. 1

Facility Name & Mailing Address

Cochise Silver Mines, Inc.
P. O. Box 158
Tombstone, Arizona 85638

SAMPLE COLLECTION INFORMATION

☒ Groundwater ☐ Vadose ☐ Waste Stream ☐ Pond
☐ Other

Sample Date 3-13-87 Sample Time 11:55 A.M.

Depth to Water 404.2 Feet below land surface
(Groundwater Samples Only)

Parameter Code: P72019

Collected By:

ADHS Use Only

S C .

Parameter Name*	Storet Parameter Number	Laboratory Analysis Results	Parameter Name*	Storet Parameter Number	Laboratory Analysis Results
Arsenic +	P01002,	. ,	Endrin[a]	P39390,	. ,
Barium +	P01007,	. ,	Lindane[a]	P39782,	. ,
Cadmium +	P01027,	. ,	MethoxyChlor[a]	P39480,	. ,
Chromium +	P01034,	. ,	Toxaphene[a]	P39400,	. ,
Lead +	P01051,	. ,	2,4-D[a]	P39730,	. ,
Mercury +	P71900,	< 0.001 ,	2,4,5-TP Silvex[a]	P39045,	. ,
Nitrate(N)	P00620,	10.0 ,	TTHM[a]	P82080,	. ,
Selenium +	P01147,	. ,	Free Cyanide, mg/L ,		< 0.01 ,
Silver +	P01077,	. ,	Total Cyanide, mg/L ,		< 0.01 ,
Fluoride	P00951,	. ,		,	. ,
	,	. ,		,	. ,
Alkalinity	P00410,	. ,		,	. ,
Calcium	P00916,	. ,		,	. ,
Chloride	P00940,	. ,		,	. ,
Copper +	P01042,	. ,		,	. ,
Hardness	P00900,	. ,	Radium-226/228[b]	P11503,	. ,
Iron +	P01045,	. ,	Gross Alpha, Tot[b]	P01501,	. ,
Magnesium	P00927,	. ,	— Count Error[b]	P01502,	. ,
Manganese +	P01055,	. ,	Beta Activity[b]	P03501,	. ,
pH	P00403,	. ,	Cesium-134[b]	P28414,	. ,
Sodium	P00929,	. ,	Iodine-131[b]	P28301,	. ,
Sulfate	P00945,	. ,	Strontium-90/89[b]	P01082,	. ,
TDS	P00500,	. ,	Tritium[b]	P82126,	. ,
Zinc +	P01092,	. ,	Uranium[b]	P22706,	. ,

*Units are mg/l unless otherwise noted. < = less than

[a]Units are μg/l
[b]Units are pCi/l

cc: Dir. of Public Works, Tombstone, AZ

Send 3 copies of completed form to:
Arizona Department of Health Services
Office of Waste and Water Quality Mgmt.
Compliance Section
Room 304
2005 North Central
Phoenix, Arizona 85004

Comments:

Analysis Date 4-6-87
Analyst KD

000147

Tombstone City Tap Water
SPECIMEN NO.

Self-Monitoring Report Form
Arizona Department of Health Services

3-13-87
DATE REC'D AT LAB

Lab Name & Address — LAB ID NO. 00002

Arizona Testing Laboratories
817 West Madison Street
Phoenix, Arizona 85007

ADHS Permit No. G-0011-02

Sample Location Tombstone City Tap Water

Facility Name & Mailing Address

Cochise Silver Mines, Inc.
P. O. Box 158
Tombstone, Arizona 85638

SAMPLE COLLECTION INFORMATION

☒ Groundwater ☐ Vadose ☐ Waste Stream ☐ Pond
☐ Other

Sample Date 3-13-87 Sample Time 11:05 A.M.
Depth to Water 518 Feet below land surface
(Groundwater Samples Only)
Parameter Code: P72019

Collected By:

ADHS Use Only

S C .

Parameter Name*	Storet Parameter Number	Laboratory Analysis Results	Parameter Name*	Storet Parameter Number	Laboratory Analysis Results
Arsenic +	P01002,	. ,	Endrin[a]	P39390,	. ,
Barium +	P01007,	. ,	Lindane[a]	P39782,	. ,
Cadmium +	P01027,	. ,	MethoxyChlor[a]	P39480,	. ,
Chromium +	P01034,	. ,	Toxaphene[a]	P39400,	. ,
Lead +	P01051,	. ,	2,4-D[a]	P39730,	. ,
Mercury +	P71900,	< 0.001 ,	2,4,5-TP Silvex[a]	P39045,	. ,
Nitrate(N)	P00620,	6.2 ,	TTHM[a]	P82080,	. ,
Selenium +	P01147,	. ,	Free Cyanide, mg/L	,	< 0.01 ,
Silver +	P01077,	. ,	Total Cyanide, mg/L	,	< 0.01 ,
Fluoride	P00951,	. ,		,	. ,
	,	. ,		,	. ,
Alkalinity	P00410,	. ,		,	. ,
Calcium	P00916,	. ,		,	. ,
Chloride	P00940,	. ,		,	. ,
Copper +	P01042,	. ,		,	. ,
Hardness	P00900,	. ,	Radium-226/228[b]	P11503,	. ,
Iron +	P01045,	. ,	Gross Alpha, Tot[b]	P01501,	. ,
Magnesium	P00927,	. ,	— Count Error[b]	P01502,	. ,
Manganese +	P01055,	. ,	Beta Activity[b]	P03501,	. ,
pH	P00403,	. ,	Cesium-134[b]	P28414,	. ,
Sodium	P00929,	. ,	Iodine-131[b]	P28301,	. ,
Sulfate	P00945,	. ,	Strontium-90/89[b]	P01082,	. ,
TDS	P00500,	. ,	Tritium[b]	P82126,	. ,
Zinc +	P01092,	. ,	Uranium[b]	P22706,	. ,

*Units are mg/l unless otherwise noted. < = less than

[a]Units are μg/l
[b]Units are pCi/l

cc: Dir. of Public Works, Tombstone, AZ

Send 3 copies of completed form to:
Arizona Department of Health Services
Office of Waste and Water Quality Mgmt.
Compliance Section
Room 304
2005 North Central
Phoenix, Arizona 85004

Comments:

Analysis Date 4-6-87
Analyst

000148

COCHISE SILVER MINES, INC.

CHAIN OF CUSTODY

DATE: 15 MAY 1987

SAMPLE I.D. See Below

SAMPLER: GARY LINDROOS, Cochise Silver Mines, INC. Gary Lindroos

DELIVERED BY: Hadley R Godfrey

RECEIVED BY: Betsy Glauber

SAMPLE I.D. ADDITIONAL INFORMATION:

Tombstone City well No. 1	(3 Bottles)
Tombstone City Tap Water	(3 Bottles)
TEI Well No. 1	(3 Bottles)
TEI Well No. 2	(3 Bottles)

Self-Monitoring Report Form

327102
SPECIMEN NO.

5-15-87
DATE REC'D AT LAB

Lab Name & Address — LAB ID NO. 00002

Arizona Testing Laboratories
817 West Madison Street
Phoenix, Arizona 85007

ADHS Permit No. G-0011-02

Sample Location TEI Well No. 1

Facility Name & Mailing Address

Cochise Silver Mines, Inc.
P.O. Box 158
Tombstone, Arizona 85638

SAMPLE COLLECTION INFORMATION

☒ Groundwater ☐ Vadose ☐ Waste Stream ☐ Pond
☐ Other

Sample Date 5-15-87 Sample Time 10:45 A.M

Depth to Water 518 Feet below land surface
(Groundwater Samples Only)

Parameter Code: P72019

Collected By: Gary Lindrood

ADHS Use Only

S C .

Parameter Name*	Storet Parameter Number	Laboratory Analysis Results	Parameter Name*	Storet Parameter Number	Laboratory Analysis Results
Arsenic +	P01002,	. ,	Endrin[a]	P39390,	. ,
Barium +	P01007,	. ,	Lindane[a]	P39782,	. ,
Cadmium +	P01027,	. ,	MethoxyChlor[a]	P39480,	. ,
Chromium +	P01034,	. ,	Toxaphene[a]	P39400,	. ,
Lead +	P01051,	. ,	2,4-D[a]	P39730,	. ,
Mercury +	P71900,	< 0.001 ,	2,4,5-TP Silvex[a]	P39045,	. ,
Nitrate(N)	P00620,	2.9 ,	TTHM[a]	P82080,	. ,
Selenium +	P01147,	. ,	Free Cyanide, mg/L	,	< 0.01 ,
Silver +	P01077,	. ,	Total Cyanide, mg/L	,	< 0.01 ,
Fluoride	P00951,	. ,		,	. ,
	,	. ,		,	. ,
Alkalinity	P00410,	. ,		,	. ,
Calcium	P00916,	. ,		,	. ,
Chloride	P00940,	. ,		,	. ,
Copper +	P01042,	. ,		,	. ,
Hardness	P00900,	. ,	Radium-226/228[b]	P11503,	. ,
Iron +	P01045,	. ,	Gross Alpha, Tot[b]	P01501,	. ,
Magnesium	P00927,	. ,	— Count Error[b]	P01502,	. ,
Manganese +	P01055,	. ,	Beta Activity[b]	P03501,	. ,
pH	P00403,	. ,	Cesium-134[b]	P28414,	. ,
Sodium	P00929,	. ,	Iodine-131[b]	P28301,	. ,
Sulfate	P00945,	. ,	Strontium-90/89[b]	P01082,	. ,
TDS	P00500,	. ,	Tritium[b]	P82126,	. ,
Zinc +	P01092,	. ,	Uranium[b]	P22706,	. ,

*Units are mg/l unless otherwise noted.

[a]Units are μg/l
[b]Units are pCi/l

Send 3 copies of completed form to:

Office of Waste and Water Quality Mgmt.
Compliance Section
Room 304
2005 North Central
Phoenix, Arizona 85004

Comments:

Analysis Date 5/22/87

Analyst SH

000150

327103
SPECIMEN NO.

Self-Monitoring Report Form

18
5/~~15~~/87
DATE REC'D AT LAB

Lab Name & Address — LAB ID NO. 00002

Arizona Testing Laboratories
817 West Madison Street
Phoenix, Arizona 85007

ADHS Permit No. G-0011-02

Sample Location TEI Well No. 2

Facility Name & Mailing Address

Cochise Silver Mines, Inc.
P.O. Box 158
Tombstone, Arizona 85638

SAMPLE COLLECTION INFORMATION

☒ Groundwater ☐ Vadose ☐ Waste Stream ☐ Pond
☐ Other

Sample Date 5-15-87 Sample Time 11:00 A.M

Depth to Water 527 Feet below land surface
(Groundwater Samples Only)

Parameter Code: P72019

Collected By: Gary Lundrose

ADHS Use Only

S C .

Parameter Name*	Storet Parameter Number	Laboratory Analysis Results	Parameter Name*	Storet Parameter Number	Laboratory Analysis Results
Arsenic +	P01002,	. ,	Endrin[a]	P39390,	. ,
Barium +	P01007,	. ,	Lindane[a]	P39782,	. ,
Cadmium +	P01027,	. ,	MethoxyChlor[a]	P39480,	. ,
Chromium +	P01034,	. ,	Toxaphene[a]	P39400,	. ,
Lead +	P01051,	. ,	2,4-D[a]	P39730,	. ,
Mercury +	P71900,	0.020 ,	2,4,5-TP Silvex[a]	P39045,	. ,
Nitrate(N)	P00620,	20.8 ,	TTHM[a]	P82080,	. ,
Selenium +	P01147,	. ,	Free Cyanide, mg/L	,	< 0.01 ,
Silver +	P01077,	. ,	Total Cyanide, mg/L	,	0.24 ,
Fluoride	P00951,	. ,		,	. ,
	,	. ,		,	. ,
Alkalinity	P00410,	. ,		,	. ,
Calcium	P00916,	. ,		,	. ,
Chloride	P00940,	. ,		,	. ,
Copper +	P01042,	. ,		,	. ,
Hardness	P00900,	. ,	Radium-226/228[b]	P11503,	. ,
Iron +	P01045,	. ,	Gross Alpha, Tot[b]	P01501,	. ,
Magnesium	P00927,	. ,	— Count Error[b]	P01502,	. ,
Manganese +	P01055,	. ,	Beta Activity[b]	P03501,	. ,
pH	P00403,	. ,	Cesium-134[b]	P28414,	. ,
Sodium	P00929,	. ,	Iodine-131[b]	P28301,	. ,
Sulfate	P00945,	. ,	Strontium-90/89[b]	P01082,	. ,
TDS	P00500,	. ,	Tritium[b]	P82126,	. ,
Zinc +	P01092,	. ,	Uranium[b]	P22706,	. ,

*Units are mg/l unless otherwise noted.

[a]Units are μg/l
[b]Units are pCi/l

Send 3 copies of completed form to:

Office of Waste and Water Quality Mgmt.
Compliance Section
Room 304
2005 North Central
Phoenix, Arizona 85004

Comments:

Analysis Date 5/22/87

Analyst [illegible]

000151

327100
SPECIMEN NO.

Self-Monitoring Report Form

18
5/~~XX~~/87
DATE REC'D AT LAB

Lab Name & Address — LAB ID NO. 00002

Arizona Testing Laboratories
817 West Madison Street
Phoenix, Arizona 85007

ADHS Permit No. G-0011-02

Sample Location Tombstone City Well No. 1

Facility Name & Mailing Address

Cochise Silver Mine, Inc.
P.O. Box 158
Tombstone, Arizona 85638

SAMPLE COLLECTION INFORMATION

☒ Groundwater ☐ Vadose ☐ Waste Stream ☐ Pond
☐ Other

Sample Date 5-15-87 Sample Time 11:30 A.M.

Depth to Water 404 Feet below land surface
(Groundwater Samples Only)

Parameter Code: P72019

Collected By: Gary Rinehart

ADHS Use Only

S C .

Parameter Name*	Storet Parameter Number	Laboratory Analysis Results	Parameter Name*	Storet Parameter Number	Laboratory Analysis Results
Arsenic +	P01002,	. ,	Endrin[a]	P39390,	. ,
Barium +	P01007,	. ,	Lindane[a]	P39782,	. ,
Cadmium +	P01027,	. ,	MethoxyChlor[a]	P39480,	. ,
Chromium +	P01034,	. ,	Toxaphene[a]	P39400,	. ,
Lead +	P01051,	. ,	2,4-D[a]	P39730,	. ,
Mercury +	P71900,	< 0.001 ,	2,4,5-TP Silvex[a]	P39045,	. ,
Nitrate(N)	P00620,	10.2 ,	TTHM[a]	P82080,	. ,
Selenium +	P01147,	. ,	Free Cyanide, mg/L	,	< 0.01 ,
Silver +	P01077,	. ,	Total Cyanide, mg/L	,	< 0.01 ,
Fluoride	P00951,	. ,		,	. ,
	,	. ,		,	. ,
Alkalinity	P00410,	. ,		,	. ,
Calcium	P00916,	. ,		,	. ,
Chloride	P00940,	. ,		,	. ,
Copper +	P01042,	. ,		,	. ,
Hardness	P00900,	. ,	Radium-226/228[b]	P11503,	. ,
Iron +	P01045,	. ,	Gross Alpha, Tot[b]	P01501,	. ,
Magnesium	P00927,	. ,	— Count Error[b]	P01502,	. ,
Manganese +	P01055,	. ,	Beta Activity[b]	P03501,	. ,
pH	P00403,	. ,	Cesium-134[b]	P28414,	. ,
Sodium	P00929,	. ,	Iodine-131[b]	P28301,	. ,
Sulfate	P00945,	. ,	Strontium-90/89[b]	P01082,	. ,
TDS	P00500,	. ,	Tritium[b]	P82126,	. ,
Zinc +	P01092,	. ,	Uranium[b]	P22706,	. ,

*Units are mg/l unless otherwise noted.

[a]Units are µg/l
[b]Units are pCi/l

Send 3 copies of completed form to:

Office of Waste and Water Quality Mgmt.
Compliance Section
Room 304
2005 North Central
Phoenix, Arizona 85004

Comments:

Analysis Date 5-22-87

Analyst SH

000152

327101
SPECIMEN NO.

Self-Monitoring Report Form

18
5/~~XX~~/87
DATE REC'D AT LAB

Lab Name & Address LAB ID NO. 00002

Arizona Testing Laboratories
817 West Madison Street
Phoenix, Arizona 85007

ADHS Permit No: G-0011-02

Sample Location: Tombstone City Tap Water

Facility Name & Mailing Address

Cochise Silver Mines, Inc.
P.O. Box 158
Tombstone, Arizona 85638

SAMPLE COLLECTION INFORMATION

☒ Groundwater ☐ Vadose ☐ Waste Stream ☐ Pond
☐ Other

Sample Date 5-15-87 Sample Time 12:00 No.1

Depth to Water _____ Feet below land surface
(Groundwater Samples Only)

Parameter Code: P72019

Collected By: Gary Lindroos

ADHS Use Only

S C .

Parameter Name*	Storet Parameter Number	Laboratory Analysis Results	Parameter Name*	Storet Parameter Number	Laboratory Analysis Results
Arsenic +	P01002,	. ,	Endrin[a]	P39390,	. ,
Barium +	P01007,	. ,	Lindane[a]	P39782,	. ,
Cadmium +	P01027,	. ,	MethoxyChlor[a]	P39480,	. ,
Chromium +	P01034,	. ,	Toxaphene[a]	P39400,	. ,
Lead +	P01051,	. ,	2,4-D[a]	P39730,	. ,
Mercury +	P71900,	< 0.001 ,	2,4,5-TP Silvex[a]	P39045,	. ,
Nitrate(N)	P00620,	5.0 ,	TTHM[a]	P82080,	. ,
Selenium +	P01147,	. ,	Free Cyanide, mg/L	,	< 0.01 ,
Silver +	P01077,	. ,	Total Cyanide, mg/L	,	< 0.01 ,
Fluoride	P00951,	. ,		,	. ,
	,	. ,		,	. ,
Alkalinity	P00410,	. ,		,	. ,
Calcium	P00916,	. ,		,	. ,
Chloride	P00940,	. ,		,	. ,
Copper +	P01042,	. ,		,	. ,
Hardness	P00900,	. ,	Radium-226/228[b]	P11503,	. ,
Iron +	P01045,	. ,	Gross Alpha, Tot[b]	P01501,	. ,
Magnesium	P00927,	. ,	— Count Error[b]	P01502,	. ,
Manganese +	P01055,	. ,	Beta Activity[b]	P03501,	. ,
pH	P00403,	. ,	Cesium-134[b]	P28414,	. ,
Sodium	P00929,	. ,	Iodine-131[b]	P28301,	. ,
Sulfate	P00945,	. ,	Strontium-90/89[b]	P01082,	. ,
TDS	P00500,	. ,	Tritium[b]	P82126,	. ,
Zinc +	P01092,	. ,	Uranium[b]	P22706,	. ,

*Units are mg/l unless otherwise noted.

[a]Units are μg/l
[b]Units are pCi/l

Send 3 copies of completed form to:

Office of Waste and Water Quality Mgmt.
Compliance Section
Room 304
2005 North Central
Phoenix, Arizona 85004

Comments: _____

Analysis Date 5/22/87

Analyst SH

000153

Groundwater Quality Protection Permit

Self-Monitoring Report Form

SPECIMEN NO. _____

DATE REC'D AT LAB _____

Lab Name & Address

LAB ID NO.

ADHS Permit No. G-0011-02

Sample Location TEI Well No. 1

SAMPLE COLLECTION INFORMATION

X ☐ Groundwater ☐ Vadose ☐ Waste Stream ☐ Pond

☐ Other _____

Sample Date _____ Sample Time _____

Depth to Water _____ Feet below land surface
(Groundwater Samples Only)

Parameter Code: P72019

Collected By: Gary Lindroos

Facility Name & Mailing Address

Cochise Silver Mines, Inc.
P. O. Box 158
Tombstone, Arizona 85638

ADHS Use Only

S C .

Parameter Name*	Storet Parameter Number	Laboratory Analysis Results
Arsenic +	P01002,	. ,
Barium +	P01007,	. ,
Cadmium +	P01027,	. ,
Chromium +	P01034,	. ,
Lead +	P01051,	. ,
Mercury +	P71900,	. ,
Nitrate (N)	P00620,	. ,
Selenium +	P01147,	. ,
Silver +	P01077,	. ,
Fluoride	P00951,	. ,
	,	. ,
Alkalinity	P00410,	. ,
Calcium	P00916,	. ,
Chloride	P00940,	. ,
Copper +	P01042,	. ,
Hardness	P00900,	. ,
Iron +	P01045,	. ,
Magnesium	P00927,	. ,
Manganese +	P01055,	. ,
pH	P00403,	. ,
Sodium	P00929,	. ,
Sulfate	P00945,	. ,
TDS	P00500,	. ,
Zinc +	P01092,	. ,

*Units are mg/l unless otherwise noted.

Parameter Name*	Storet Parameter Number	Laboratory Analysis Results
Endrin[a]	P39390,	. ,
Lindane[a]	P39782,	. ,
MethoxyChlor[a]	P39480,	. ,
Toxaphene[a]	P39400,	. ,
2,4-D[a]	P39730,	. ,
2,4,5-TP Silvex[a]	P39045,	. ,
TTHM[a]	P82080,	. ,
Free Cyanide	Mg/L,	<0.01 ,
	,	. ,
	,	. ,
	,	. ,
	,	. ,
	,	. ,
	,	. ,
	,	. ,
Radium-226/228[b]	P11503,	. ,
Gross Alpha, Tot[b]	P01501,	. ,
— Count Error[b]	P01502,	. ,
Beta Activity[b]	P03501,	. ,
Cesium-134[b]	P28414,	. ,
Iodine-131[b]	P28301,	. ,
Strontium-90/89[b]	P01082,	. ,
Tritium[b]	P82126,	. ,
Uranium[b]	P22706,	. ,

[a]Units are µg/l
[b]Units are pCi/l

Send 3 copies of completed form to:

Office of Waste and Water Quality Mgmt.
Compliance Section
Room 304
1005 North Central
Phoenix, Arizona 85004

Comments: Field Summary
April, May & June 1987

Analysis Date _____

Analyst Gary L. Lindroos

000154

Groundwater Quality Protection Permit
Self-Monitoring Report Form

SPECIMEN NO. _____

DATE REC'D AT LAB _____

Lab Name & Address

LAB ID NO.

ADHS Permit No. G-0011-02

Sample Location TEI Well No. 2

Facility Name & Mailing Address

Cochise Silver Mines, Inc.
P. O. Box 158
Tombstone, Arizona 85638

SAMPLE COLLECTION INFORMATION

☒ Groundwater ☐ Vadose ☐ Waste Stream ☐ Pond

☐ Other _____

Sample Date _____ Sample Time _____

Depth to Water _____ Feet below land surface
(Groundwater Samples Only)

Parameter Code: P72019

Collected By: Gary Lindroos

ADHS Use Only

S C .

Parameter Name*	Storet Parameter Number	Laboratory Analysis Results
Arsenic +	P01002,	. ,
Barium +	P01007,	. ,
Cadmium +	P01027,	. ,
Chromium +	P01034,	. ,
Lead +	P01051,	. ,
Mercury +	P71900,	. ,
Nitrate(N)	P00620,	. ,
Selenium +	P01147,	. ,
Silver +	P01077,	. ,
Fluoride	P00951,	. ,
	,	. ,
Alkalinity	P00410,	. ,
Calcium	P00916,	. ,
Chloride	P00940,	. ,
Copper +	P01042,	. ,
Hardness	P00900,	. ,
Iron +	P01045,	. ,
Magnesium	P00927,	. ,
Manganese +	P01055,	. ,
pH	P00403,	. ,
Sodium	P00929,	. ,
Sulfate	P00945,	. ,
TDS	P00500,	. ,
Zinc +	P01092,	. ,

*Units are mg/l unless otherwise noted.

Parameter Name*	Storet Parameter Number	Laboratory Analysis Results
Endrin[a]	P39390,	. ,
Lindane[a]	P39782,	. ,
MethoxyChlor[a]	P39480,	. ,
Toxaphene[a]	P39400,	. ,
2,4-D[a]	P39730,	. ,
2,4,5-TP Silvex[a]	P39045,	. ,
TTHM[a]	P82080,	. ,
Free Cyanide	Mg/L ,	<0.01 ,
	,	. ,
	,	. ,
	,	. ,
	,	. ,
	,	. ,
	,	. ,
	,	. ,
Radium-226/228[b]	P11503,	. ,
Gross Alpha, Tot[b]	P01501,	. ,
— Count Error[b]	P01502,	. ,
Beta Activity[b]	P03501,	. ,
Cesium-134[b]	P28414,	. ,
Iodine-131[b]	P28301,	. ,
Strontium-90/89[b]	P01082,	. ,
Tritium[b]	P82126,	. ,
Uranium[b]	P22706,	. ,

[a]Units are µg/l
[b]Units are pCi/l

Send 3 copies of completed form to:

Office of Waste and Water Quality Mgmt.
Compliance Section
Room 304
1005 North Central
Phoenix, Arizona 85004

Comments: Field Summary
April, May, June 1987

Analysis Date _____

Analyst Gary A. Lindroos

000155

Groundwater Quality Protection Permit
Self-Monitoring Report Form

SPECIMEN NO. _____

DATE REC'D AT LAB _____

Lab Name & Address — LAB ID NO. _____

ADHS Permit No. G-0011-02

Sample Location TEI Well No. 3

Facility Name & Mailing Address

Cochise Silver Mines, Inc.
P. O. Box 158
Tombstone, Arizona 85638

SAMPLE COLLECTION INFORMATION

☒ Groundwater ☐ Vadose ☐ Waste Stream ☐ Pond

☐ Other _____

Sample Date _____ Sample Time _____

Depth to Water _____ Feet below land surface
(Groundwater Samples Only)

Parameter Code: P72019

Collected By: Gary Lindroos

ADHS Use Only

S C .

Parameter Name*	Storet Parameter Number	Laboratory Analysis Results
Arsenic +	P01002,	. ,
Barium +	P01007,	. ,
Cadmium +	P01027,	. ,
Chromium +	P01034,	. ,
Lead +	P01051,	. ,
Mercury +	P71900,	. ,
Nitrate (N)	P00620,	. ,
Selenium +	P01147,	. ,
Silver +	P01077,	. ,
Fluoride	P00951,	. ,
	,	. ,
Alkalinity	P00410,	. ,
Calcium	P00916,	. ,
Chloride	P00940,	. ,
Copper +	P01042,	. ,
Hardness	P00900,	. ,
Iron +	P01045,	. ,
Magnesium	P00927,	. ,
Manganese +	P01055,	. ,
pH	P00403,	. ,
Sodium	P00929,	. ,
Sulfate	P00945,	. ,
TDS	P00500,	. ,
Zinc +	P01092,	. ,

*Units are mg/l unless otherwise noted.

Parameter Name*	Storet Parameter Number	Laboratory Analysis Results
Endrin[a]	P39390,	. ,
Lindane[a]	P39782,	. ,
MethoxyChlor[a]	P39480,	. ,
Toxaphene[a]	P39400,	. ,
2,4-D[a]	P39730,	. ,
2,4,5-TP Silvex[a]	P39045,	. ,
TTHM[a]	P82080,	. ,
Free Cyanide	Mg/L,	<0.01 ,
	,	. ,
	,	. ,
	,	. ,
	,	. ,
	,	. ,
	,	. ,
	,	. ,
Radium-226/228[b]	P11503,	. ,
Gross Alpha, Tot[b]	P01501,	. ,
— Count Error[b]	P01502,	. ,
Beta Activity[b]	P03501,	. ,
Cesium-134[b]	P28414,	. ,
Iodine-131[b]	P28301,	. ,
Strontium-90/89[b]	P01082,	. ,
Tritium[b]	P82126,	. ,
Uranium[b]	P22706,	. ,

[a]Units are µg/l
[b]Units are pCi/l

end 3 copies of completed form to:

Office of Waste and Water Quality Mgmt.
Compliance Section
Room 304
1005 North Central
Phoenix, Arizona 85004

Comments: Field Summary
April, May & June 1987

Analysis Date _____

Analyst Gary P. Lindroos

000156

COCHISE SILVER MINES, INC.
P. O. Box 158
Tombstone, Arizona 85638

24 July 1987

Arizona Testing Laboratories
817 West Madison Street
Phoenix, Arizona 85007

Dear Sirs:

Enclosed you will find Well Water Samples for TEI Wells No. 1 and No. 2, Tombstone City Well No. 1 and Tombstone Tap Water.

Please run samples for Free and Total Cyanide, Nitrates (as N), and Mercury.

If you have any questions please contact me at 457-2282. Thank you.

Sincerely yours,

Gary A. Lindroos

Gary A. Lindroos
Cochise Silver Mines, Inc.

Duplicate samples to Smith & Smith Labs in Sierra Vista. Ruth Vanden Broeck arrived at 8:00 a.m the date and we sampled all wells together. GAL

Arizona Testing Laboratories

817 West Madison Street □ Phoenix, Arizona 85007 □ 602/254-6181

For: Cochise Silver Mines, Inc.
Attn: Mr. Gary Lindroos
Post Office Box 158
Tombstone, Arizona 85638

Date: July 29, 1987

Lab. No.: 4332

Sample: Water

Marked: Sampled: 7-24-87, 0800

Received: 7-27-87

Submitted by: Same

REPORT OF LABORATORY TESTS

Samples Marked:	TEI Well #1	TEI Well #2	Tombstone City, Well #1	Tombstone Tap Water	
Mercury	LT0.001	0.027	LT0.001	LT0.001	mg/L
Nitrate - N	2.6	23.5	11.5	4.2	
Total Cyanide	LT0.01	0.18	LT0.01	LT0.01	
Free Cyanide	LT0.01	0.02	LT0.01	LT0.01	

LT = less than the detection limit given

Respectfully submitted,

ARIZONA TESTING LABORATORIES

Robert J. Drake

Robert J. Drake

COCHISE SILVER MINES, INC.
P. O. Box 158
Tombstone, Arizona 85638

August 5, 1987

Mr. James E. Curlett
Arizona Department of Environmental Quality
Water Pollution Compliance Unit
2005 North Central Avenue
Phoenix, Arizona 85004

Dear Mr. Curlett:

Reference your letter of July 23, 1987. We have resampled Tombstone City Well No. 1, Tombstone City Tap Water, TEI Well No. 1 and TEI Well No. 2. Smith and Smith Laboratories had a representative here on July 24, 1987 and samples were split for Smith and Smith Laboratories and Arizona Testing Laboratories. Copies of test results from both laboratories are enclosed.

Mrs. Kathy Smith has informed me that they had mercury contamination of the nitric acid they used at their laboratory. This is evidentally why they had higher mercury readings on the July samples which were tested. As you can see from the reports the mercury levels for TEI Well No. 1, Tombstone City Well No. 1 and Tombstone Tap Water are all less than their detection limits.

Smith and Smith Laboratories this morning sampled TEI Wells 1, 2, and 3, Tombstone City Well No. 1 and Tombstone Tap water for the August sampling period.

If I can be of any assistance to you please contact me at 457-2282

Sincerely yours,

Gary A. Lindroos
Cochise Silver Mines, Inc.

5 Incl
cc: Mr. James Maston, Southern Regional Office, ADEQ
Mr. Robert Manuri, Manager, Field Services Station, ADEQ
Ms. Sarah Mapes, Manager, Compliance Section, ADEQ
Mr. Roger Kennett, Hydrology, ADEQ
Mr. Ronald L. Miller, Ph. D., ADEQ
Mr. Alex Gradillas, Mayor of Tombstone
Ms. Carol Mordhorst, Director Cochise Co. Health Dept.
Mr. David Baron, Center for Law in the Public Interest
Ms. Nancy Jamison, Civil Division, Attorney General's Office
Mr. Dustin Escapule, Vice President, Cochise Silver Mines, Inc.

Groundwater Quality Protection Permit

Self-Monitoring Report Form

IS 317
SPECIMEN NO.

7/27/87
DATE REC'D AT LAB

Lab Name & Address — LAB ID NO. 00048

Smith & Smith Environmental
Consultants
199 East Fry Blvd. Suite 202
Sierra Vista AZ 85635

ADHS Permit No. _____

Sample Location: Cochise Silver Mine Well # 1

Facility Name & Mailing Address
Cochise Silver Mines
PO Box 158
Tombstone AZ 85638

ATTN: MR. GARY LINDROOS

SAMPLE COLLECTION INFORMATION
[X] Groundwater [ ] Vadose [ ] Waste Stream [ ] Pond
[ ] Other _____
Sample Date: 7/24/87 Sample Time: 0730
Depth to Water _____ Feet below land surface
(Groundwater Samples Only)
Parameter Code: P72019

Collected By: RVB

ADHS Use Only

S C .

Parameter Name*	Storet Parameter Number	Laboratory Analysis Results
Arsenic +	P01002,	. ,
Barium +	P01007,	. ,
Cadmium +	P01027,	. ,
Chromium +	P01034,	. ,
Lead +	P01051,	. ,
Mercury +	P71900,	< 0.001 ,
Nitrate (N)	P00620,	1.5 ,
Selenium +	P01147,	. ,
Silver +	P01077,	. ,
Fluoride	P00951,	. ,
	,	. ,
Alkalinity	P00410,	. ,
Calcium	P00916,	. ,
Chloride	P00940,	. ,
Copper +	P01042,	. ,
Hardness	P00900,	. ,
Iron +	P01045,	. ,
Magnesium	P00927,	. ,
Manganese +	P01055,	. ,
pH	P00403,	. ,
Sodium	P00929,	. ,
Sulfate	P00945,	. ,
TDS	P00500,	. ,
Zinc +	P01092,	. ,

Parameter Name*	Storet Parameter Number	Laboratory Analysis Results
Endrin[a]	P39390,	. ,
Lindane[a]	P39782,	. ,
MethoxyChlor[a]	P39480,	. ,
Toxaphene[a]	P39400,	. ,
2,4-D[a]	P39730,	. ,
2,4,5-TP Silvex[a]	P39045,	. ,
TTHM[a]	P82080,	. ,
	,	. ,
	,	. ,
Total Cyanide	mg/L ,	< 0.01 ,
Free Cyanide	mg/L ,	< 0.01 ,
	,	. ,
	,	. ,
	,	. ,
	,	. ,
Radium-226/228[b]	P11503,	. ,
Gross Alpha, Tot[b]	P01501,	. ,
— Count Error[b]	P01502,	. ,
Beta Activity[b]	P03501,	. ,
Cesium-134[b]	P28414,	. ,
Iodine-131[b]	P28301,	. ,
Strontium-90/89[b]	P01082,	. ,
Tritium[b]	P82126,	. ,
Uranium[b]	P22706,	. ,

*Units are mg/l unless otherwise noted.

[a]Units are µg/l
[b]Units are pCi/l

Send 3 copies of completed form to:

Office of Waste and Water Quality Mgmt.
Compliance Section
Room 304
205 North Central
Phoenix, Arizona 85004

Comments: _____

Analysis Date: 7/29/87

Analyst: DHO, RVB

000160

Groundwater Quality Protection Permit

Self-Monitoring Report Form

IS 318
SPECIMEN NO.

7/27/87
DATE REC'D AT LAB

ab Name & Address — LAB ID NO. 00048

mith & Smith Environmental
onsultants
99 East Fry Blvd. Suite 202
ierra Vista AZ 85635

ADHS Permit No. _____

Sample Location Cochise Silver Mine well # 2

Facility Name & Mailing Address
Cochise Silver Mines
PO Box 158
Tombstone AZ 85638

ATTN: MR. GARY LINDROOS

SAMPLE COLLECTION INFORMATION

☒ Groundwater ☐ Vadose ☐ Waste Stream ☐ Pond

☐ Other _____

Sample Date 7/24/87 Sample Time 0825

Depth to Water _____ Feet below land surface
(Groundwater Samples Only)

Parameter Code: P72019

Collected By: RVB

ADHS Use Only

S C .

Parameter Name*	Storet Parameter Number	Laboratory Analysis Results	Parameter Name*	Storet Parameter Number	Laboratory Analysis Results
Arsenic +	P01002,	. ,	Endrin[a]	P39390,	. ,
Barium +	P01007,	. ,	Lindane[a]	P39782,	. ,
Cadmium +	P01027,	. ,	MethoxyChlor[a]	P39480,	. ,
Chromium +	P01034,	. ,	Toxaphene[a]	P39400,	. ,
Lead +	P01051,	. ,	2,4-D[a]	P39730,	. ,
Mercury +	P71900,	0.026 ,	2,4,5-TP Silvex[a]	P39045,	. ,
Nitrate(N)	P00620,	7.0 ,	TTHM[a]	P82080,	. ,
Selenium +	P01147,	. ,		,	. ,
Silver +	P01077,	. ,		,	. ,
Fluoride	P00951,	. ,	Total Cyanide	mg/L ,	0.13 ,
	,	. ,	Free Cyanide	mg/L ,	0.02 ,
Alkalinity	P00410,	. ,		,	. ,
Calcium	P00916,	. ,		,	. ,
Chloride	P00940,	. ,		,	. ,
Copper +	P01042,	. ,		,	. ,
Hardness	P00900,	. ,	Radium-226/228[b]	P11503,	. ,
Iron +	P01045,	. ,	Gross Alpha, Tot[b]	P01501,	. ,
Magnesium	P00927,	. ,	— Count Error[b]	P01502,	. ,
Manganese +	P01055,	. ,	Beta Activity[b]	P03501,	. ,
pH	P00403,	. ,	Cesium-134[b]	P28414,	. ,
Sodium	P00929,	. ,	Iodine-131[b]	P28301,	. ,
Sulfate	P00945,	. ,	Strontium-90/89[b]	P01082,	. ,
TDS	P00500,	. ,	Tritium[b]	P82126,	. ,
Zinc +	P01092,	. ,	Uranium[b]	P22706,	. ,

*Units are mg/l unless otherwise noted.

[a]Units are µg/l
[b]Units are pCi/l

Comments: _____

Analysis Date 7/29/87

Analyst DHO, RVB

end 3 copies of completed form to:

ffice of Waste and Water Quality Mgmt.
ompliance Section
oom 304
X05 North Central
hoenix, Arizona 85004

000181

Groundwater Quality Protection Permit

Self-Monitoring Report Form

IS 319
SPECIMEN NO.

7/27/87
DATE REC'D AT LAB

ab Name & Address — LAB ID NO. 00048

mith & Smith Environmental
onsultants
99 East Fry Blvd. Suite 202
ierra Vista AZ 85635

ADHS Permit No. _____

Sample Location Cochise SilverMine lab tap

Facility Name & Mailing Address

Cochise Silver Mines
PO Box 158
Tombstone AZ 85638

ATTN: MR. GARY LINDROOS

SAMPLE COLLECTION INFORMATION

☒ Groundwater ☐ Vadose ☐ Waste Stream ☐ Pond
☐ Other _____

Sample Date 7/24/87 Sample Time 0910

Depth to Water _____ Feet below land surface
(Groundwater Samples Only)

Parameter Code: P72019

Collected By: RVB

DHS Use Only

S C .

Parameter Name*	Storet Parameter Number	Laboratory Analysis Results	Parameter Name*	Storet Parameter Number	Laboratory Analysis Results
Arsenic +	P01002,	. ,	Endrin[a]	P39390,	. ,
Barium +	P01007,	. ,	Lindane[a]	P39782,	. ,
Cadmium +	P01027,	. ,	MethoxyChlor[a]	P39480,	. ,
Chromium +	P01034,	. ,	Toxaphene[a]	P39400,	. ,
Lead +	P01051,	. ,	2,4-D[a]	P39730,	. ,
Mercury +	P71900,	< 0.001 ,	2,4,5-TP Silvex[a]	P39045,	. ,
Nitrate(N)	P00620,	3.0 ,	TTHM[a]	P82080,	. ,
Selenium +	P01147,	. ,		,	. ,
Silver +	P01077,	. ,		,	. ,
Fluoride	P00951,	. ,	Total Cyanide	mg/L ,	< 0.01 ,
	,	. ,	Free Cyanide	mg/L ,	< 0.01 ,
Alkalinity	P00410,	. ,		,	. ,
Calcium	P00916,	. ,		,	. ,
Chloride	P00940,	. ,		,	. ,
Copper +	P01042,	. ,		,	. ,
Hardness	P00900,	. ,	Radium-226/228[b]	P11503,	. ,
Iron +	P01045,	. ,	Gross Alpha, Tot[b]	P01501,	. ,
Magnesium	P00927,	. ,	— Count Error[b]	P01502,	. ,
Manganese +	P01055,	. ,	Beta Activity[b]	P03501,	. ,
pH	P00403,	. ,	Cesium-134[b]	P28414,	. ,
Sodium	P00929,	. ,	Iodine-131[b]	P28301,	. ,
Sulfate	P00945,	. ,	Strontium-90/89[b]	P01082,	. ,
TDS	P00500,	. ,	Tritium[b]	P82126,	. ,
Zinc +	P01092,	. ,	Uranium[b]	P22706,	. ,

*Units are mg/l unless otherwise noted.

[a]Units are µg/l
[b]Units are pCi/l

nd 3 copies of completed form to:

ice of Waste and Water Quality Mgmt.
mpliance Section
om 304
05 North Central
oenix, Arizona 85004

Comments: _____

Analysis Date 7/29/87

Analyst DHO, RVB

000182

Groundwater Quality Protection Permit

Self-Monitoring Report Form

IS 320
SPECIMEN NO.

7/27/87
DATE REC'D AT LAB

Lab Name & Address — LAB ID NO. 00048

Smith & Smith Environmental
Consultants
999 East Fry Blvd. Suite 202
Sierra Vista AZ 85635

ADHS Permit No. _____

Sample Location City of Tombstone well# 1

Facility Name & Mailing Address
Cochise Silver Mines
PO Box 158
Tombstone AZ 85638
ATTN: MR. GARY LINDROOS

SAMPLE COLLECTION INFORMATION
[X] Groundwater [ ] Vadose [ ] Waste Stream [ ] Pond
[ ] Other _____
Sample Date 7/24/87 Sample Time 0940
Depth to Water _____ Feet below land surface
(Groundwater Samples Only)
Parameter Code: P72019
Collected By: RVB

ADHS Use Only
SC.

Parameter Name*	Storet Parameter Number	Laboratory Analysis Results	Parameter Name*	Storet Parameter Number	Laboratory Analysis Results
Arsenic +	P01002,	. ,	Endrin[a]	P39390,	. ,
Barium +	P01007,	. ,	Lindane[a]	P39782,	. ,
Cadmium +	P01027,	. ,	MethoxyChlor[a]	P39480,	. ,
Chromium +	P01034,	. ,	Toxaphene[a]	P39400,	. ,
Lead +	P01051,	. ,	2,4-D[a]	P39730,	. ,
Mercury +	P71900,	< 0.001 ,	2,4,5-TP Silvex[a]	P39045,	. ,
Nitrate(N)	P00620,	8.6 ,	TTHM[a]	P82080,	. ,
Selenium +	P01147,	. ,		,	. ,
Silver +	P01077,	. ,		,	. ,
Fluoride	P00951,	. ,	Total Cyanide	mg/L ,	< 0.01 ,
	,	. ,	Free Cyanide	mg/L ,	< 0.01 ,
Alkalinity	P00410,	. ,		,	. ,
Calcium	P00916,	. ,		,	. ,
Chloride	P00940,	. ,		,	. ,
Copper +	P01042,	. ,		,	. ,
Hardness	P00900,	. ,	Radium-226/228[b]	P11503,	. ,
Iron +	P01045,	. ,	Gross Alpha, Tot[b]	P01501,	. ,
Magnesium	P00927,	. ,	— Count Error[b]	P01502,	. ,
Manganese +	P01055,	. ,	Beta Activity[b]	P03501,	. ,
pH	P00403,	. ,	Cesium-134[b]	P28414,	. ,
Sodium	P00929,	. ,	Iodine-131[b]	P28301,	. ,
Sulfate	P00945,	. ,	Strontium-90/89[b]	P01082,	. ,
TDS	P00500,	. ,	Tritium[b]	P82126,	. ,
Zinc +	P01092,	. ,	Uranium[b]	P22706,	. ,

*Units are mg/l unless otherwise noted.

[a]Units are µg/l
[b]Units are pCi/l

Comments: _____

Analysis Date 7/29/87
Analyst DHO, RVB

Send 3 copies of completed form to:

Office of Waste and Water Quality Mgmt.
Compliance Section
Room 304
205 North Central
Phoenix, Arizona 85004

000163

Arizona Testing Laboratories

817 West Madison Street □ Phoenix, Arizona 85007 □ 602/254-6181

For: Cochise Silver Mines, Inc.
Attn: Mr. Gary Lindroos
Post Office Box 158
Tombstone, Arizona 85638

Date: July 29, 1987

Lab. No.: 4332

Sample: Water

Marked: Sampled: 7-24-87, 0800

Received: 7-27-87

Submitted by: Same

REPORT OF LABORATORY TESTS

Samples Marked:	TEI Well #1	TEI Well #2	Tombstone City, Well #1	Tombstone Tap Water	
Mercury	LT0.001	0.027	LT0.001	LT0.001	mg/L
Nitrate - N	2.6	23.5	11.5	4.2	
Total Cyanide	LT0.01	0.18	LT0.01	LT0.01	
Free Cyanide	LT0.01	0.02	LT0.01	LT0.01	

LT = less than the detection limit given

Respectfully submitted,

ARIZONA TESTING LABORATORIES

Robert J. Drake

Robert J. Drake

Smith & Smith Labs

	6 Aug 87 Well 1	6 Aug 87 Well 2	19 Aug 87 Well 2	6 Aug 87 Well 3	Acceptable Limits Per Permit
Free CN	< 0.01	0.03	—	0.01	0.20 mg/L
Total CN	< 0.01	0.13	0.07	0.05	0.20 mg/L
Nitrates (as N)	2.0	6.7	10.9	2.5	10.0 mg/L
Mercury	< 0.001	0.024	0.024	< 0.001	0.002 mg/L

Tailings/Pand Assays

Arizona Testing Laboratories
817 West Madison Street □ Phoenix, Arizona 85007 □ 602/254-6181

For: Cochise Silver Mines, Inc.
Attn: Mr. Gary A. Lindroos
Post Office Box 158
Tombstone, Arizona 85638

Date: May 18, 1987

Lab. No.: 3227

Sample: Cyanide Sludge Cake

Marked: See Below

Received: 5/14/87

Submitted by: Bird Machine Co., Inc.

REPORT OF LABORATORY TESTS

Samples Marked	Total Cyanide
Solid Bowl Centrifuge Cake w/out Polymer	1.6 ppm
Solid Bowl Centrifuge Cake w/130 mg/L Polymer	1.9
Belt Filter Press Cake	2.9

Respectfully submitted,

ARIZONA TESTING LABORATORIES

Robert J. Drake

Robert J. Drake

Arizona Testing Laboratories
817 West Madison Street □ Phoenix, Arizona 85007 □ 602/254-6181

For: American Engineering Company
Attn: Mr. Scott Larson
3864 North 27th Avenue
Phoenix, Arizona 85017

Date: May 19, 1986

Lab. No.: 7522

Sample: Soil

Marked: See Below

Received: 5-8-86

Submitted by: Same

REPORT OF LABORATORY TESTS

Samples Marked	Total Cyanide, ppm
1) Old Spray Pond Surface Sample	713 ppm
2) Old Spray Pond 1' Under	1180 ppm
3) Line Pond Surface	11 ppm

Respectfully submitted,

ARIZONA TESTING LABORATORIES

Robert J. Drake

Robert J. Drake

Smith & Smith Environmental Consultants
4201 INLAND RD. PH. 458-4789
P.O. BOX 1146, SIERRA VISTA, ARIZONA 85636

Cochise Silver Mines
P O Box 158
Tombstone AZ 85638
Attn: Mr Gary Lindroos

Sample type: solid impound sample
Collected by: Cochise Silver Mines
Lab received date: 06/10/87
Method: EPA 9010

Specimen no.	Name	Sample date	Total CN- conc.
IS 250	IMPOUND NORTH	06/09/87	0.18 mg/kg
IS 251	IMPOUND SOUTH	06/09/87	0.11 mg/kg
IS 252	IMPOUND EAST	06/09/87	0.19 mg/kg
IS 253	IMPOUND WEST	06/09/87	0.12 mg/kg

date reported: 06/12/87
analyst: DHO

Respectfully submitted,
Kathryn W. Smith
Kathryn W. Smith
Laboratory Director

Smith & Smith Environmental Consultants
4201 INLAND RD. PH. 458-4789
P.O. BOX 1146, SIERRA VISTA, ARIZONA 85636

Cochise Silver Mines
P O Box 158
Tombstone AZ 85638
Attn: Mr Gary Lindroos

Sample type: solid impound sample
Collected by: Cochise Silver Mines
Lab received date: 06/12/87
Method: EPA 9010

Specimen no.	Name	Sample date	Total CN- conc.
IS 254	IMPOUND EAST	06/11/87	< 0.01 mg/kg
IS 255	IMPOUND WEST	06/11/87	< 0.01 mg/kg

date reported: 06/12/87
analyst: DHO

Respectfully submitted,

Kathryn W. Smith
Laboratory Director

Smith & Smith Environmental Consultants
4201 INLAND RD. PH. 458-4789
P.O. BOX 1146, SIERRA VISTA, ARIZONA 85636

Cochise Silver Mines
P O Box 158
Tombstone AZ 85638
Attn: Mr Gary Lindroos

Sample type: pregnant solution
Collected by: Cochise Silver Mines
Lab received date: 06/16/87
Method: EPA 335.2

Specimen no.	Name	Sample date	Total CN- conc.
IS 260	PREGNANT SOL'N WITH SODIUM HYPOSULFITE	06/16/87	< 0.01 mg/L
IS 261	PREGNANT SOL'N UNTREATED	06/16/87	4.55 mg/L
			Free CN- conc.
IS 260	PREGNANT SOL'N WITH SODIUM HYPOSULFITE	06/16/87	< 0.01 mg/L
IS 261	PREGNANT SOL'N UNTREATED	06/16/87	0.67 mg/L

date reported: 06/18/87
analyst: DHO

Respectfully submitted,

Kathryn W. Smith

Kathryn W. Smith
Laboratory Director

Smith & Smith Environmental Consultants
4201 INLAND RD. PH. 458-4789
P.O. BOX 1146, SIERRA VISTA, ARIZONA 85636

Cochise Silver Mines
P O Box 158
Tombstone AZ 85638
Attn: Mr Gary Lindroos

Sample type: solid impound sample
Collected by: Cochise Silver Mines
Lab received date: 06/17/87
Method: EPA 9010

Specimen no.	Name	Sample date	Total CN- conc.
IS 250	IMPOUND NORTH	06/17/87	< 0.01 mg/kg
IS 251	IMPOUND SOUTH	06/17/87	0.01 mg/kg
IS 252	IMPOUND EAST	06/17/87	0.01 mg/kg
IS 253	IMPOUND WEST	06/17/87	< 0.01 mg/kg

date reported: 06/18/87
analyst: DHO

* The above are re-samples of Impound samples collected 6/9/87. A 24 hour turn around time for test results was requested by Mr. Gary Lindroos.

Respectfully submitted,

Kathryn W. Smith

Kathryn W. Smith
Laboratory Director

Clay-Sub liner Reports

DRAFT

GEOCHEMICAL EVALUATION

OF CLAY-SUBLINER MATERIAL

PBR MINERALS, INC.

JUNE 15, 1988

TABLE OF CONTENTS

Page

1.0 Purpose and Scope

2.0 Introduction

3.0 Geochemical Program

3.1 Preparation of Heap-Leach Solution

3.2 Geochemical Characterization of Clay - Subliner Material

3.2.1 Mineralogical Results

3.2.2 Geochemical Properties

3.2.3 Geochemical Evlauation

3.3 Sequential Batch Testwork

3.3.1 Testwork Procedures

3.3.2 Discussion of Results

4.0 Conclusions

1.0 PURPOSE AND SCOPE

This Geochemical Report was prepared in support of PBR Minerals' "Application for a Ground-Water Quality Protection Permit" for a gold mining and heap-leaching facility to be located south of the town of Tombstone, Cochise County, Arizona. The report summarizes the results and conclusions from laboratory testwork conducted to evaluate the geochemical attenuation abilaity of locally available clay-bearing material which is to be used in the construction of clay-subliners for process water impoundments and leach pads.

The principal objectives of the laboratory program were twofold:

(1) determine the mineralogical and geochemical properties of the clay-subliner material; and

(2) confirm through laboratory testwork whether the clay-subliner material can retard or attenuate the movement of chemical constituents that may be present in seepage.

2.0 INTRODUCTION

PBR Minerals, Inc. is submitting a permit application of operate a gold mining and heap-leaching facility in Cochise County, Arizona. The facility will include a conventional heap-leaching circuit. Where crushed ore will be loaded on a low-permeability pad and leached with a dilute solution of sodium cyanide. Gold-bearing solutions collected from the heap leach will be treated to recover precious metals and then recycled. Spent ore will be neutralized and left in place.

The leach pad and process water ponds will be lined with synthetic membranes which will be placed over compacted clay subliners. The clay subliners can serve two purposes. In addition to acting as a geotechnical barrier to seepage movement, the clay subliners can function as a geochemical barrier to contaminant migration. If the clay-subliner material has the right geochemical properties, the clay can interact with chemical constituents which may be present in seepage. Under the right conditions such interactions can lead to geochemical reactions that fix and immobilize constituents and remove them from solution. Examples of such geochemical mechanisms include cation- and anion-exchange, sorption, precipitation and coprecipitation. Performing in this way, a clay subliner can introduce one additional safeguard against contaminant migration.

3.0 GEOCHEMICAL PROGRAM

The geochemical program that was implemented for PBR Minerals was designed to complement geotechnical and geohydrological investigations at the site. The program consisted of laboratory analyses and testwork on clay-bearing material that was targeted for use in the construction of impoundment and leach pad subliners.

Specific objectives of the laboratory program included the following:

(1) prepare a synthetic heap-leach solution that resembled possible seepage solutions;

(2) determine the mineralogical and geochemical properties of the clay-subliner material; and

(3) evaluate in sequential batch tests the ability of the clay-subliner material to act as a geotechnical trap and retard the migration of chemical constituents present in seepage.

3.1 Preparation of Heap-Leach Solution

The synthetic cyanide solution which was utilized in the clay subliner evaluation studies was prepared at Core Laboratories, Aurora, Colorado, from samples of ore and well water provided by Mr. Gary Lindroos, Technical Superintendent, PBR Minerals, Inc. Care was taken to assure that the heap-leach solution would be representative of the heap-leaching practices

anticipated at PBR Minerals. The solution was synthesized from actual ore that will be processed in the PBR Minerals heap-leach circuit and by using water from the No. 2 well at the site. Cyanide and lime were added in proportions that would duplicate leaching conditions in the heap. The matrix that PBR Minerals anticipates using is 1 pound NaCN and 4 pounds lime per ton of ore.

Duplicating this matrix, the heap-leach solution was prepared by agitating a mixture of 10 pounds of ore composite, 9 grams of lime, 2.5 grams of NaCN in 10 liters of water, for about 24 hours. The procedure is described in more detail in the testwork protocols included with the analytical report from Core Laboratories that is appended to this report. At the conclusion of the procedure, the mixture was settled and the cyanide solution was decanted. Chemical analysis of this synthetic heap-leach solution is presented in Table 3-1.

The solution that is profiled in Table 3-1 resembles the heap-leach fluids that would come into contact with clay-subliner material in the unlikely event of liner leakage. The solution is alkaline (pH 11.6), enriched in cyanide concentrations, and contains traces of arsenic, cadmium, and mercury. The synthetic cyanide solution contains silver at a concentration of 2.03 mg/l. This concentration of silver reflects the fact that no attempt was made to recover the precious metal from solution. Silver and gold will be recovered during commercial plant operations.

3.2 Geochemical Characterizations of Clay-Subliner Materials

A sample of the clay-subliner material was analyzed for mineralogical and geochemical properties at Core Laboratories, Aurora, Colorado. Mineralogical identification consisted of quantitative x-ray diffraction analysis to determine bulk mineralogy and relative clay abundances. Geochemical evaluation

TABLE 3-1

CHEMICAL ANALYSIS OF SYNTHETIC HEAP-LEACH SOLUTION

PARAMETER	CONCENTRATION, in mg/l
pH (units)	11.6
Arsenic	0.07
Barium	0.06
Cadmium	0.09
Chromium	<0.01
Lead	<0.01
Mercury	0.0474
Selenium	0.04
Silver	2.03
Total Cyanide	115.
Free Cyanide	120.
Weak-Acid-Dissociable Cyanide	138.

involved laboratory analyses of the sample for geochemical properties to include the following:

- cation-exchange capacity and exchangeable cations
- acid-soluble iron and manganese
- organic carbon content
- soil pH
- base neutralizing potential

3.2.1 Mineralogical Properties

The x-ray diffraction analyses completed on the bulk sample and on the clay-size fraction are summarized in Table 3-2. The analysis indicates that the subliner material is calcereous and contains various clay minerals. The mineral calcite ($CaCO_3$) constitutes the major percentage (46% by weight) of the bulk material. Clay minerals constitute a smaller but significant fraction (24% by weight). The principal clay-forming minerals in this fraction are the mixed-layer smectite or montmorillonite type of clay minerals. Kaolinite and illite make up a minor percentage of the total clay-mineral phase.

3.2.2 Geochemical Properties

The results of geochemical analyses completed on the clay-subliner sample are presented in Table 3-3. The size of the clay-size fraction was determined by qualitative clay separation techniques. Cation-exchange capacity was measured by using the sodium acetate extraction procedure; exchangeable bases were

TABLE 3-2

MINERALOGICAL PROPERTIES OF CLAY-SUBLINER SAMPLE

CONSTITUENT	BULK MINERALOGY (wt %)	
Quartz	24	
Feldspar	06	
Plagioclase		02
K-Feldspar		04
Calcite	46	
Clay Minerals	24	
	100%	

CONSTITUENT	RELATIVE CLAY ABUNDANCES (wt %)
Kaolinite	09
Chlorite	---
Illite	16
Mixed-layer, Illite/Smectite	75
	100%

TABLE 3-3

GEOCHEMICAL PROPERTIES OF CLAY-SUBLINER SAMPLE

PARAMETER	UNITS	VALUE
Moisture (Air-Dry)	%	4.13
Clay Content	%	35.0
Cation-Exchange Capacity	meq/100g	14.7
Exchangeable Cations:		
Calcium	meq/100g	39.3
Magnesium	meq/100g	3.64
Sodium	meq/100g	1.07
Potassium	meq/100g	0.23
Acid-Soluble Iron	%	0.61
Acid-Soluble Manganese	%	0.02
Total Organic Carbon	%	0.11
Soil pH	pH units	7.58
Base Neutralizing Potential		

determined by using a soluble cation extraction procedure in combination with an ammonium acetate extraction procedure. Organic carbon was analyzed using a modified Walkley-Black acid-digestion method, and the amount of iron and manganese hydrous oxides present was estimated by soaking the sample in dilute hydrochloric acid and measuring the iron and manganese that were solublized in the process.

The clay-subliner sample contains about 35 percent clay-size material and shows a moderate cation-exchange capacity (14.7 meq/100 g). Calcium is the predominant exchangeable cation, suggesting that any smectite or montomorillonite clay is calcium saturated. The discrepancy between the reported exchangeable calcium and the total cation-exchange capacity of the sample is related to the presence of $CaCO_3$ in the material. Calcium-bearing minerals such as calcite are slightly soluble in the ammonium acetate solution that is used in the exchangeable cation procedure. Dissolution of the calcite interferes in the exchangeable calcium analyses.

As expected, the clay-subliner sample is low in organic carbon content (0.11% by weight). The results of iron analyses suggest that traces of iron hydrous oxides may be present in the material. The soil pH of the clay-subliner sample is near-neutral. However, the sample shows an ability to neutralize the pH of alkaline solutions.

3.2.3 Geochemical Evaluation

Overall, the clay-subliner sample shows very favorable mineralogical and geochemical properties. The properties suggest that the clay-subliner material can geochemically interact with seepage solutions and immobilize potential ground-water contaminants.

The material is enriched in clay minerals, especially in mixed-layer type clays such as montmorillonite. Montmorillonite-type clays are well known for their ability to undergo cation-and anion-exchange reactions with chemical constituents and to immobilize potential ground-water contaminants. Likewise, the material contains traces of organic carbon and iron hydrous-oxide impurities which can be beneficial. Organic carbon can act as a chemical reducing agent and the iron hydrous oxides can scavange and sorb chemical constituents from ground water.

Although the soil pH of the clay-subliner sample is slightly alkaline, the material has the ability and capacity to neutralize the alkaline pH of potential cyanide seepage solutions. By neutralizing the alkaline pH, conditions are established that promote degradation or attenuation of cyanide. Cyanide volatilization becomes significant when the pH of seepage solution is reduced below approximately 9.4; sorption of cyanide by natural clay-bearing materials is more efficient at less alkaline pH.

3.3 Sequential Batch Testwork

Sequential batch testwork is a laboratory procedure that is commonly used to evaluate the attenuation ability of clay-liner materials. Sequential batch testwork is described in more detail by Houle and Long (1980). The procedures simulate continously leached columns wherein successive seepage solution comes in contact with fresh clay-subliner material that can effect attenuation of potential contaminants. The procedure can simulate years of potential field seepage through a clay subliner in a few days of laboratory testwork.

3.3.1 Testwork Procedures

A schematic of the sequential batch test that was designed for the PBR Mineral's geochemical program is illustrated in Figure 3-1. The procedures consisted of mixing measured portions of clay-subliner material and the synthetic heap-leach solution discussed in section 3.1 and gently agitating the slurry in rolling bottles for a period of 24 hours. At the conclusion of each test in the series, the solution was sampled for chemical analysis and, after filtering, the liquid and solid portions were advanced in sequence according to the matrix illustrated in Figure 3-1.

3.3.2 Discussion of Results

Table 3-4 summarizes the results of chemical analyses completed on leachate samples from each batch test. The results are reported on a dissolved basis since leachate samples were filtered through 0.45 um prior to analysis. For comparison purposes, the chemical profile of the synthetic heap-leach solution used in the testwork is included in Table 3-4.

The pH measurements prsented in Table 3-4 clearly show the pH buffering capacity of the clay-subliner material. Contact of the heap-leach solution with the clay material in each test neutralized the alkalinity of the solution from pH 11.6 to pH of about 8-9. As expected, the greatest amount of neutralization was observed in batch tests A1, A2, and A3, where the solution to solids ratio was 1:1. However, the alkalinity (pH 11.6) of the heap-leach solution was reduced significantly even in batch test C1 (pH 9.31), where the solution to solids ratio was 3.1. By neutralizing the alkalinity of

SEQUENTIAL BATCH TESTWORK - PBR MINERALS, INC.

CLAY - SUBLINER SAMPLE

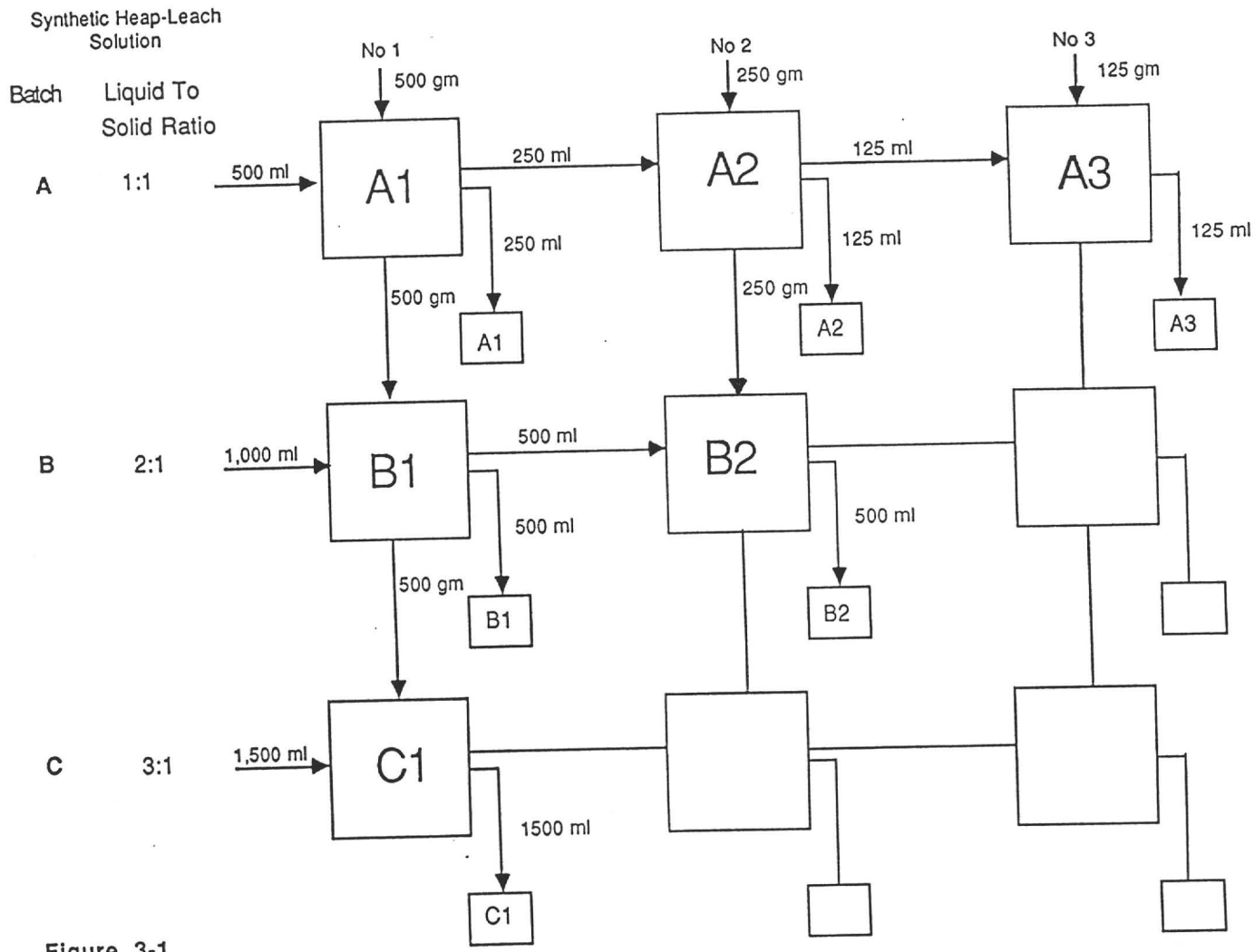

Figure 3-1

GEOCHEMICAL ENGINEERING INCORPORATED

000185

TABLE 3-4
CHEMICAL ANALYSES OF SOLUTIONS FROM SEQUENTIAL BATCH TESTS

PARAMETER	SYNTHETIC HEAP-LEACH SOLUTION	CONCENTRATION, in mg/l					
		A1	A2	A3	B1	B2	C1
pH (pH units)	11.6	7.90	7.31	7.51	9.03	8.28	9.31
Arsenic	0.07	0.01	<0.05	<0.05	<0.01	0.01	<0.01
Cadmium	0.09	0.02	0.01	<0.01	0.05	0.03	0.07
Mercury	0.0474						
Total Cyanide	115.	72.8	41.6	15.8	98.8	55.2	87.6
Free Cyanide	120.	92.4	37.2	16.6	95.6	62.8	100.
Weak-Acid Dissociable Cyanide	138.	83.6	33.2	4.2	81.6	50.0	83.6

the heap-leach solution, pH conditions are established that promote the functioning of geochemical mechanisms which remove potential ground-water containments from solution.

The arsenic, cadmium, and mercury analyses summarized in Table 3-4 confirm that the clay-liner material is capable of scavenging heavy metals and removing chemical constituents from solution. Arsenic, for example, which was present in the heap-leach solution at a concentration of 0.07 mg/l was not detected in most of the samples from the batch tests. The solutions from batch test A1 and B2 did report 0.01 mg/l arsenic. Arsenic will be immobilized from solution by any number of geochemical mechanisms. Under neutral to slightly acid pH conditions, arsenic in the form of the monovalent arsenate ($H_2AsO_4^{-1}$) anion will undergo exchange with montmorillonite-type clays. In addition to anion exchange with clay minerals, arsenic is likely to undergo adsorption and precipitation reactions with common clay impurities. For example, arsenic may be adsorbed on hydrous oxides of iron or may be precipitated as an insoluble arsenate by metals such as iron, copper, or zinc.

Similar geochemical mechanisms (cation-exchange, adsorption, and precipitation) are probably responsible for removing cadmium and mercury from the heap-leach solution during the batch testwork. The effectiveness of these reactions are illustrated in samples A1, A2, and A3.

Neutralizing the alkaline pH of the heap-leach solution had a pronounced effect on the cyanide concentrations reported in the batch test solutions. Prior to contact with clay-subliner material, the synthetic heap-leach solution used in the sequential batch testwork contained over 100 mg/l cyanide. With each contact, the concentrations of cyanide were reduced. The solution sample

from batch test A3 reported about 16 mg/l total cyanide and about 4 mg/l WAD cyanide. These concentrations represent a decrease of 86 and 97 percent in the total and WAD cyanide levels, respectively, from the start of the batch tests.

Volatilization is a major physiochemical mechanism that will degrade and retard the movement of cyanide through the clay subliner. Neutralizing the alkaline pH of the heap-leach solution reduces the pH into a range where significant cyanide volatilization can occur. Cyanide volatilization becomes significant when the pH is reduced below 9.4.

4.0 CONCLUSIONS

The results of the geochemical analyses and the sequential batch testwork lead to the following conclusions:

1. The mineralogical and geochemical properties of the clay-subliner sample are typical of natural materials which retard or attenuate the movement of chemical constituents.

2. The principal clay-forming minerals in the clay-subliner sample are smectite or montmorillonite-type clays. Trace amounts of organic carbon and iron hydrous-oxides are present in the material. Most importantly, the clay-subliner material is capable of neutralizing the alkaline pH of heap-leach solutions.

3. By neutralizing alkalinity, favorable pH conditions are established which promote the functioning of geochemical mechanisms which immobilize heavy metals such as arsenic, cadmium, and mercury, and degrade or volatilize cyanide.

4. Sequential batch testwork confirms that the clay-subliner material will interact with any unlikely seepage and is able attenuate potential ground-water contaminants such as arsenic, cadmium, mercury, and cyanide.

TESTWORK PROTOCOLS

PBR MINERALS

A. LABORATORY PREPARATION OF HEAP-LEACH SOLUTION

PROCEDURE:

1. Air-dry, mix and composite ore sample;
2. Weigh 10 pounds of ore composite and transfer to leach vessel;
3. Introduce 10 liters of water from No 2 well, and agitate mixture (0.31% solids);
4. Measure pH of mixture after about 15 minutes of agitation;
5. Add 9 grams of lime ($Ca(OH)_2$) to mixture amd agitate;
6. Measure pH of mixture after about 15 minutes of agitation;
7. If pH is alkaline (>9.0), add 2.5 grams of NaCN and agitate;
8. Measure pH of mixture after first 15 minutes and each 2 hours thereafter (during first 8 hours of mixing);
9. Agitate for 24 hours;
10. Let stand , measure pH and decant clear solution for use in sequential batch-contact tests.

B. GEOCHEMICAL CHARACTERIZATION OF CLAY-LINER MATERIAL

PROCEDURE:

1. Air-dry, mix and composite clay-liner sample;
2. Analyze composite sample for the following:
   a. Cation-exchange capacity and exchangeable cations;
   b. soil pH and base-neutralizing potential;
   c. organic carbon content;
   d. acid-soluble iron and manganese content
   e. clay-sized material
   f. bulk-mineral analysis and clay-mineral analysis

C. SEQUENTIAL BATCH-CONTACT TESTS

PROCEDURE:

1. As of Figure 1

Western Atlas International
A Litton/Dresser Company

CORE LABORATORIES

ANALYTICAL REPORT

June 16, 1988

Client Sample I.D.		KBR Minerals Ore Sample	KBR Minerals Clay Liner
Lab Sample I.D. (880487)		#1	#2
PARAMETER	UNITS		
% Moisture-Air Dry	%	3.21	4.13
* Soil pH (1:1 paste)	pH Units	----	7.58
Cation Exchange Cap.	meq/100gm	----	14.7
Exchangeable Cations			
Calcium	meq/100gm	----	39.3
Magnesium	meq/100gm	----	3.64
Sodium	meq/100gm	----	1.07
Potassium	meq/100gm	----	0.23
Acid Soluble Fe	%	----	0.61
Acid Soluble Mn	%	----	0.02
Organic Carbon (W.B.)	%	----	0.11
Clay Content	%	----	35.0
Base Neutralizing Cap.			

000191

The analysis, opinions or interpretations contained in this report are based upon observations and material supplied by the client for whose exclusive and confidential use this report has been made. The interpretations or opinions expressed represent the best judgment of Core Laboratories. Core Laboratories assumes no responsibility and makes no warranty or representations, express or implied, as to the productivity, proper operations or profitableness however of any oil, gas, coal or other mineral, property, well or sand in connection with which such report is used or relied upon for any reason whatsoever.

Western Atlas International
A Litton/Dresser Company

CORE LABORATORIES

5295 Hollister Road
Houston, Texas
77040-6295
(713) 460-9600

Core Laboratories - Aurora
Sample No. 880487-2

File: 288283

TABLE 1

X-RAY DIFFRACTION (XRD) DATA
(Weight Percent)

Sample:	1
Bulk Mineralogy (Calculated)*	
Quartz	24
Feldspar	06
Plagioclase	02
K-Feldspar	04
Calcite	46
Clay Minerals	24
	100%
Relative Clay Abundances (Normalized to 100%)	
Kaolinite	09
Chlorite	--
Illite	16
Mixed-layer** Illite/Smectite	75(80)
	100%

* Bulk mineralogy is calculated from sand/silt-size and clay-size XRD data.

** Numbers in ( ) are percent expandable smectite interlayers in mixed-layer clays.

This report is based upon information and materials supplied by the client and is prepared for the exclusive confidential use of the client. The analyses or interpretations contained herein represent the opinion of Core Laboratories and its employees assume no responsibility and specifically disclaim any expressed or implied warranties or representations as to the utility of this report to the client or as to the productivity, proper operation, or profitableness of any oil, gas or other mineral activity or well in connection with which such report may be used or relied upon.

SEQUENTIAL BATCH TESTWORK - PBR MINERALS, INC.

CLAY - SUBLINER SAMPLE

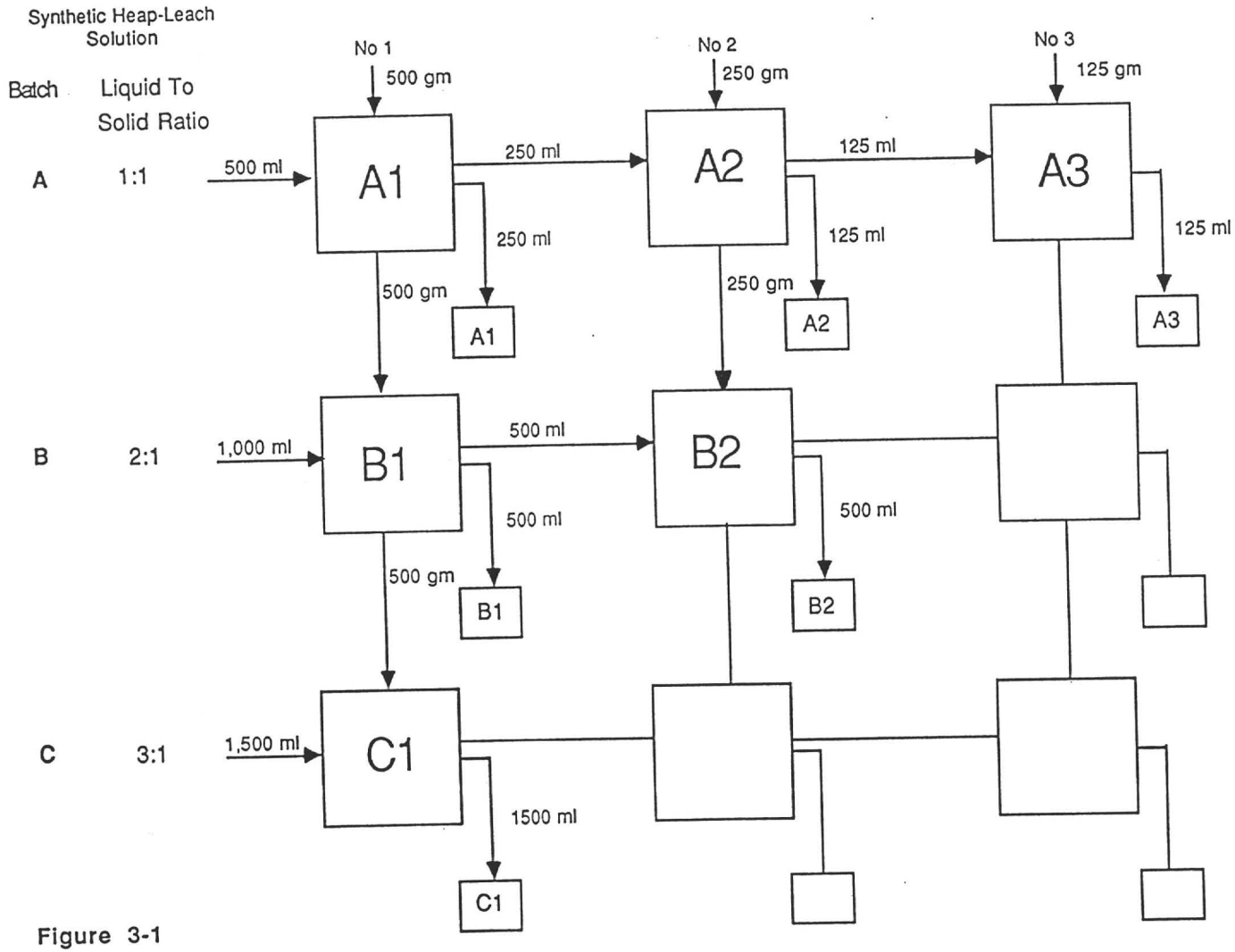

Figure 3-1

000193

GEOCHEMICAL ENGINEERING INCORPORATED

Western Atlas International
A Litton/Dresser Company

CORE LABORATORIES

ANALYTICAL REPORT

June 16, 1988

The following are results on extracts from bottle roll tests performed as illustrated in Figure 1 (Copy attached). The solution used for each test (Heap Leach Solution - 880487-3) was prepared following the directions provided (A - attached). The solids used in each test was the PBR Minerals Clay Liner Material - 880487-2.

Client Sample I.D. (KBR Minerals)		Heap Leach Solution	2A1	2A2
Lab Sample I.D. (880487)		#3	#4	#5
PARAMETER	UNITS			
pH	pH Units	11.6	7.90	7.31
Total Cyanide	mg/l	115	72.8	41.6
Free Cyanide	mg/l	120	92.4	37.2
W.A.D. Cyanide	mg/l	138	83.6	33.2
Arsenic	mg/l	0.07	0.01	<0.05
Barium	mg/l	0.06	----	----
Cadmium	mg/l	0.09	0.02	0.01
Chromium	mg/l	<0.01	----	----
Lead	mg/l	<0.01	----	----
Mercury	ug/l	47.4		
Selenium	mg/l	0.04	----	----
Silver	mg/l	2.03	----	----

The analysis, opinions or interpretations contained in this report are based upon observations and material supplied by the client for whose exclusive and confidential use this report has been made. The interpretations or opinions expressed represent the best judgment of Core Laboratories. Core Laboratories assumes no responsibility and makes no warranty or representations, express or implied, as to the productivity, proper operations or profitableness however of any oil, gas, coal or other mineral, property, well or sand in connection with which such report is used or relied upon for any reason whatsoever.

Western Atlas International
A Litton/Dresser Company

CORE LABORATORIES

ANALYTICAL REPORT

June 16, 1988

The following are results on extracts from bottle roll tests performed as illustrated in Figure 1 (Copy attached). The solution used for each test (Heap Leach Solution - 880487-3) was prepared following the directions provided (A - attached). The solids used in each test was the PBR Minerals Clay Liner Material - 880487-2.

Client Sample I.D. (KBR Minerals)		2B1	2A3	2B2
Lab Sample I.D. (880487)		#6	#7	#8
PARAMETER	UNITS			
pH	pH Units	9.03	7.51	8.28
Total Cyanide	mg/l	98.8	15.8	55.2
Free Cyanide	mg/l	95.6	16.6	62.8
W.A.D. Cyanide	mg/l	81.6	4.20	50.0
Arsenic	mg/l	<0.01	<0.05	0.01
Cadmium	mg/l	0.05	<0.01	0.03
Mercury	mg/l			

The analysis, opinions or interpretations contained in this report are based upon observations and material supplied by the client for whose exclusive and confidential use this report has been made. The interpretations or opinions expressed represent the best judgment of Core Laboratories. Core Laboratories assumes no responsibility and makes no warranty or representations, express or implied, as to the productivity, proper operations or profitableness however of any oil, gas, coal or other mineral, property, well or sand in connection with which such report is used or relied upon for any reason whatsoever.

Western Atlas International
A Litton/Dresser Company

CORE LABORATORIES

ANALYTICAL REPORT

June 16, 1988

The following are results on extracts from bottle roll tests performed as illustrated in Figure 1 (Copy attached). The solution used for each test (Heap Leach Solution - 880487-3) was prepared following the directions provided (A - attached). The solids used in each test was the PBR Minerals Clay Liner Material - 880487-2.

Client Sample I.D. (KBR Minerals) 2C1

Lab Sample I.D. (880487) #9

PARAMETER	UNITS	
pH	pH Units	9.31
Total Cyanide	mg/l	87.6
Free Cyanide	mg/l	100
W.A.D. Cyanide	mg/l	83.6
Arsenic	mg/l	<0.01
Cadmium	mg/l	0.07
Mercury	mg/l	

The analysis, opinions or interpretations contained in this report are based upon observations and material supplied by the client for whose exclusive and confidential use this report has been made. The interpretations or opinions expressed represent the best judgment of Core Laboratories. Core Laboratories assumes no responsibility and makes no warranty or representations, express or implied, as to the productivity, proper operations or profitableness however of any oil, gas, coal or other mineral, property, well or sand in connection with which such report is used or relied upon for any reason whatsoever.

GEOCHEMICAL EVALUATION

OF CLAY-SUBLINER MATERIAL

PBR MINERALS, INC.

AUGUST 3, 1988

GEOCHEMICAL ENGINEERING
INCORPORATED

1.0 PURPOSE AND SCOPE

This Geochemical Report was prepared in support of PBR Minerals' "Application for a Ground-Water Quality Protection Permit" for a gold mining and heap-leaching facility to be located south of the town of Tombstone, Cochise County, Arizona. The report summarizes the results and conclusions from laboratory testwork conducted to evaluate the geochemical attenuation ability of locally available clay-bearing material which is to be used in the construction of clay-subliners for process water impoundments and leach pads.

The principal objectives of the laboratory program were twofold:

(1) determine the mineralogical and geochemical properties of the clay-subliner material; and

(2) confirm through laboratory testwork whether the clay-subliner material can retard or attenuate the movement of chemical constituents that may be present in seepage.

2.0 INTRODUCTION

PBR Minerals, Inc. is submitting a permit application of operate a gold mining and heap-leaching facility in Cochise County, Arizona. The facility will include a conventional heap-leaching circuit, where crushed ore will be loaded on a low-permeability pad and leached with a dilute solution of sodium cyanide. Gold-bearing solutions collected from the heap leach will be treated to recover precious metals and then recycled. Spent ore will be neutralized and moved to a spent ore disposal area.

The leach pad and process water ponds will be lined with synthetic membranes which will be placed over compacted clay subliners. The clay subliners can serve two purposes. In addition to acting as a geotechnical barrier to seepage movement, the clay subliners can function as a geochemical barrier to contaminant migration. If the clay-subliner material has the right geochemical properties, the clay can interact with chemical constituents which may be present in seepage. Under the right conditions such interactions can lead to geochemical reactions that fix and immobilize constituents and remove them from solution. Examples of such geochemical mechanisms include cation- and anion-exchange, sorption, precipitation and coprecipitation. Performing in this way, a clay subliner can introduce one additional safeguard against contaminant migration. The spent ore disposal area will be lined with a similar clay, to protect against contamination from spent ore leachate.

3.0 GEOCHEMICAL PROGRAM

The geochemical program that was implemented for PBR Minerals was designed to complement geotechnical and geohydrological investigations at the site. The program consisted of laboratory analyses and testwork on clay-bearing material that was targeted for use in the construction of impoundment and leach pad subliners, as well as spent ore disposal area liners.

Specific objectives of the laboratory program included the following:

(1) prepare a synthetic heap-leach solution that resembled possible seepage solutions;

(2) determine the mineralogical and geochemical properties of the clay-subliner material; and

(3) evaluate in sequential batch tests the ability of the clay-subliner material to act as a geotechnical trap and retard the migration of chemical constituents present in seepage.

3.1 Preparation of Heap-Leach Solution

The synthetic cyanide solution which was utilized in the clay subliner evaluation studies was prepared at Core Laboratories, Aurora, Colorado, from samples of ore and well water provided by Mr. Gary Lindroos, Technical Superintendent, PBR Minerals, Inc. Care was taken to assure that the heap-leach solution would be representative of the heap-leaching practices anticipated at PBR Minerals. The solution was synthesized from actual ore that will be processed in the PBR Minerals heap-leach circuit and by using water from the No. 2 well at the site. Cyanide and lime were added in proportions that would duplicate leaching conditions in the heap. The matrix that PBR Minerals anticipates using is 1 pound NaCN and 4 pounds lime per ton of ore.

Duplicating this matrix, the heap-leach solution was prepared by agitating a mixture of 10 pounds of ore composite, 9 grams of lime, 2.5 grams of NaCN in 10

liters of water, for about 24 hours. The procedure is described in more detail in the testwork protocols included with the analytical report from Core Laboratories that is appended to this report. At the conclusion of the procedure, the mixture was settled and the cyanide solution was decanted. Chemical analysis of this synthetic heap-leach solution is presented in Table 3-1.

The solution that is profiled in Table 3-1 resembles the heap-leach fluids that would come into contact with clay-subliner material in the unlikely event of liner leakage. The solution is alkaline (pH 11.6), enriched in cyanide concentrations, and contains traces of arsenic, cadmium, and mercury. The synthetic cyanide solution contains silver at a concentration of 2.03 mg/l. This concentration of silver reflects the fact that no attempt was made to recover the precious metal from solution. Silver and gold will be recovered during commercial plant operations.

3.2 Geochemical Characterizations of Clay-Subliner Materials

A sample of the clay-subliner material was analyzed for mineralogical and geochemical properties at Core Laboratories, Aurora, Colorado. Mineralogical identification consisted of quantitative x-ray diffraction analysis to determine bulk mineralogy and relative clay abundances. Geochemical evaluation involved laboratory analyses of the sample for geochemical properties to include the following:

- cation-exchange capacity and exchangeable cations
- acid-soluble iron and manganese
- organic carbon content
- soil pH
- base neutralizing potential

3.2.1 Mineralogical Properties

The x-ray diffraction analyses completed on the bulk sample and on the clay-size fraction are summarized in Table 3-2. The analysis indicates that the subliner material is calcareous and contains various clay minerals. The mineral calcite ($CaCO_3$) constitutes the major percentage (46% by weight) of the bulk material. Clay minerals constitute a smaller but significant fraction

(24% by weight). The principal clay-forming minerals in this fraction are the mixed-layer smectite or montmorillonite type of clay minerals. Kaolinite and illite make up a minor percentage of the total clay-mineral phase.

3.2.2 Geochemical Properties

The results of geochemical analyses completed on the clay-subliner sample are presented in Table 3-3. The size of the clay-size fraction was determined by qualitative clay separation techniques. Cation-exchange capacity was measured by using the sodium acetate extraction procedure; exchangeable bases were determined by using a soluble cation extraction procedure in combination with an ammonium acetate extraction procedure. Organic carbon was analyzed using a modified Walkley-Black acid-digestion method, and the amount of iron and manganese hydrous oxides present was estimated by soaking the sample in dilute hydrochloric acid and measuring the iron and manganese that were solublized in the process.

The clay-subliner sample contains about 35 percent clay-size material and shows a moderate cation-exchange capacity (14.7 meq/100 g). Calcium is the predominant exchangeable cation, suggesting that any smectite or montomorillonite clay is calcium saturated. The discrepancy between the reported exchangeable calcium and the total cation-exchange capacity of the sample is related to the presence of $CaCO_3$ in the material. Calcium-bearing minerals such as calcite are slightly soluble in the ammonium acetate solution that is used in the exchangeable cation procedure. Dissolution of the calcite interferes in the exchangeable calcium analyses.

As expected, the clay-subliner sample is low in organic carbon content (0.11% by weight). The results of iron analyses suggest that traces of iron hydrous oxides may be present in the material. The soil pH of the clay-subliner sample is near-neutral. However, the sample shows an ability to neutralize the pH of alkaline solutions.

3.2.3 Geochemical Evaluation

Overall, the clay-subliner sample shows very favorable mineralogical and geochemical properties. The properties suggest that the clay-subliner material can geochemically interact with seepage solutions and immobilize potential ground-water contaminants.

The material is enriched in clay minerals, especially in mixed-layer type clays such as montmorillonite. Montmorillonite-type clays are well known for their

ability to undergo cation- and anion-exchange reactions with chemical constituents and to immobilize potential ground-water contaminants. Likewise, the material contains traces of organic carbon and iron hydrous-oxide impurities which can be beneficial. Organic carbon can act as a chemical reducing agent and the iron hydrous oxides can scavange and sorb chemical constituents from ground water.

Although the soil pH of the clay-subliner sample is slightly alkaline, the material has the ability and capacity to neutralize the alkaline pH of potential cyanide seepage solutions. By neutralizing the alkaline pH, conditions are established that promote degradation or attenuation of cyanide. Cyanide volatilization becomes significant when the pH of seepage solution is reduced below approximately 9.4; sorption of cyanide by natural clay-bearing materials is more efficient at less alkaline pH.

3.3 Sequential Batch Testwork

Sequential batch testwork is a laboratory procedure that is commonly used to evaluate the attenuation ability of clay-liner materials. Sequential batch testwork is described in more detail by Houle and Long (1980). The procedures simulate continuously leached columns wherein successive seepage solution comes in contact with fresh clay-subliner material that can effect attenuation of potential contaminants. The procedure can simulate years of potential field seepage through a clay subliner in a few days of laboratory testwork.

3.3.1 Testwork Procedures

A schematic of the sequential batch test that was designed for the PBR Mineral's geochemical program is illustrated in Figure 3-1. The procedures consisted of mixing measured portions of clay-subliner material and the synthetic heap-leach solution discussed in section 3.1 and gently agitating the slurry in rolling bottles for a period of 24 hours. At the conclusion of each test in the series, the solution was sampled for chemical analysis and, after filtering, the liquid and solid portions were advanced in sequence according to the matrix illustrated in Figure 3-1.

3.3.2 Discussion of Results

Table 3-4 summarizes the results of chemical analyses completed on leachate samples from each batch test. The results are reported on a dissolved basis since leachate samples were filtered through 0.45 um prior to analysis. For comparison purposes, the chemical profile of the synthetic heap-leach solution used in the testwork is included in Table 3-4.

The pH measurements presented in Table 3-4 clearly show the pH buffering capacity of the clay-subliner material. Contact of the heap-leach solution with the clay material in each test neutralized the alkalinity of the solution from pH 11.6 to pH of about 8-9. As expected, the greatest amount of neutralization was observed in batch tests A1, A2, and A3, where the solution to solids ratio was 1:1. However, the alkalinity (pH 11.6) of the heap-leach solution was reduced significantly even in batch test C1 (pH 9.31), where the solution to solids ratio was 3:1. By neutralizing the alkalinity of the heap-leach solution, pH conditions are established that promote the functioning of geochemical mechanisms which remove potential ground-water contaminants from solution.

The arsenic, cadmium, and mercury analyses summarized in Table 3-4 confirm that the clay-liner material is capable of scavenging heavy metals and removing chemical constituents from solution. Arsenic, for example, which was present in the heap-leach solution at a concentration of 0.07 mg/l was not detected in most of the samples from the batch tests. The solutions from batch test A1 and B2 did report 0.01 mg/l arsenic. Arsenic will be immobilized from solution by any number of geochemical mechanisms. Under neutral to slightly acid pH conditions, arsenic in the form of the monovalent arsenate ($H_2AsO_4^{-1}$) anion will undergo exchange with montmorillonite-type clays. In addition to anion exchange with clay minerals, arsenic is likely to undergo adsorption and precipitation reactions with common clay impurities. For example, arsenic may be adsorbed on hydrous oxides of iron or may be precipitated as an insoluble arsenate by metals such as iron, copper, or zinc. Similar geochemical mechanisms (cation-exchange, adsorption, and precipitation) were probably responsible for removing cadmium and mercury from the heap-leach solution during the batch testwork. The effectiveness of these reactions are illustrated by the chemical analyses of leachate samples A1, A2, and A3.

The capacity of the clay-subliner material to attenuate the movement of arsenic, cadmium, and mercury is indicated by the calculations summarized in Table 3-5. The table lists the amounts of arsenic, cadmium, and mercury that were removed from the heap-leach solution by 500 g of the clay-subliner material during batch tests A1, B1, and C1. The calculations indicate that the clay-subliner material is capable of sorbing at least 0.41 mg/kg arsenic, 0.21 mg/kg cadmium, and 0.27 mg/kg mercury. The capacity estimate is conservative since the attenuation properties of the clay-subliner sample were not exhausted during the course of the testwork. Even after two prior contacts with heap-leach solution, the sample in batch test C1 continued to remove arsenic, cadmium, and mercury from solution. These results suggest that the ultimate capacity of the clay-subliner material for immobilizing arsenic, cadmium, and mercury is even greater.

Neutralizing the alkaline pH of the heap-leach solution had a pronounced effect on the cyanide concentrations reported in the batch test solutions. Prior to contact with clay-subliner material, the synthetic heap-leach solution used in the sequential batch testwork contained over 100 mg/l cyanide. With each contact, the concentrations of cyanide were reduced. The solution sample from batch test A3 reported about 16 mg/l total cyanide and about 4 mg/l WAD cyanide. These concentrations represent a decrease of 86 and 97 percent in the total and WAD cyanide levels, respectively, from the start of the batch tests.

Volatilization is a major physiochemical mechanism that will degrade and retard the movement of cyanide through the clay subliner. Neutralizing the alkaline pH of the heap-leach solution reduces the pH into a range where significant cyanide volatilization can occur. Cyanide volatilization becomes significant when the pH is reduced below 9.4.

TABLE 3-1
CHEMICAL ANALYSIS OF SYNTHETIC HEAP-LEACH SOLUTION

PARAMETER	CONCENTRATION, in mg/l
pH (units)	11.6
Arsenic	0.07
Barium	0.06
Cadmium	0.09
Chromium	<0.01
Lead	<0.01
Mercury	0.0474
Selenium	0.04
Silver	2.03
Total Cyanide	115.
Free Cyanide	120.
Weak-Acid-Dissociable Cyanide	138.

GEOCHEMICAL ENGINEERING
INCORPORATED

TABLE 3-2
MINERALOGICAL PROPERTIES OF CLAY-SUBLINER SAMPLE

CONSTITUENT	BULK MINERALOGY (wt %)	
Quartz	24	
Feldspar	06	
Plagioclase		02
K-Feldspar		04
Calcite	46	
Clay Minerals		24
		100%

CONSTITUENT	RELATIVE CLAY ABUNDANCES (wt %)	
Kaolinite	09	
Chlorite	---	
Illite	16	
Mixed-layer, Illite/Smectite	75	
		100%

GEOCHEMICAL ENGINEERING INCORPORATED

TABLE 3-3
GEOCHEMICAL PROPERTIES OF CLAY-SUBLINER SAMPLE

PARAMETER	UNITS	VALUE
Moisture (Air-Dry)	%	4.13
Clay Content	%	35.0
Cation-Exchange Capacity	meq/100g	14.7
Exchangeable Cations:		
Calcium	meq/100g	39.3
Magnesium	meq/100g	3.64
Sodium	meq/100g	1.07
Potassium	meq/100g	0.23
Acid-Soluble Iron	%	0.61
Acid-Soluble Manganese	%	0.02
Total Organic Carbon	%	0.11
Soil pH	pH units	7.58
Base Neutralizing Potential		

GEOCHEMICAL ENGINEERING
INCORPORATED

TABLE 3-4

CHEMICAL ANALYSES OF SOLUTIONS FROM SEQUENTIAL BATCH TESTS

PARAMETER	SYNTHETIC HEAP-LEACH SOLUTION	CONCENTRATION, in mg/l					
		A1	A2	A3	B1	B2	C1
pH (pH units)	11.6	7.90	7.31	7.51	9.03	8.28	9.31
Arsenic	0.07	0.01	<0.05	<0.05	<0.01	0.01	<0.01
Cadmium	0.09	0.02	0.01	<0.01	0.05	0.03	0.07
Mercury	0.0474	0.001	<0.0025	0.0005	0.0008	0.0006	0.0042
Total Cyanide	115.	72.8	41.6	15.8	98.8	55.2	87.6
Free Cyanide	120.	92.4	37.2	16.6	95.6	62.8	100.
Weak-Acid Dissociable Cyanide	138.	83.6	33.2	4.2	81.6	50.0	83.6

TABLE 3-5
CAPACITY OF CLAY-SUBLINER MATERIAL TO ATTENUATE
ARSENIC, CADMIUM AND MERCURY

BATCH TEST	LIQUID TO SOLIDS RATION	AMOUNT ATTENUATED, IN MG ARSENIC	CADMIUM	MERCURY
A1	0.5	0.030	0.035	0.0233
B1	1.0	0.070	0.040	0.0466
C1	1.5	0.105	0.030	0.0648
	TOTAL:	0.205	0.105	0.1347
	ATTENUATION CAPACITY:	0.41 mg/kg	0.21 mg/kg	0.27 mg/kg

SEQUENTIAL BATCH TESTWORK - PBR MINERALS, INC.

CLAY - SUBLINER SAMPLE

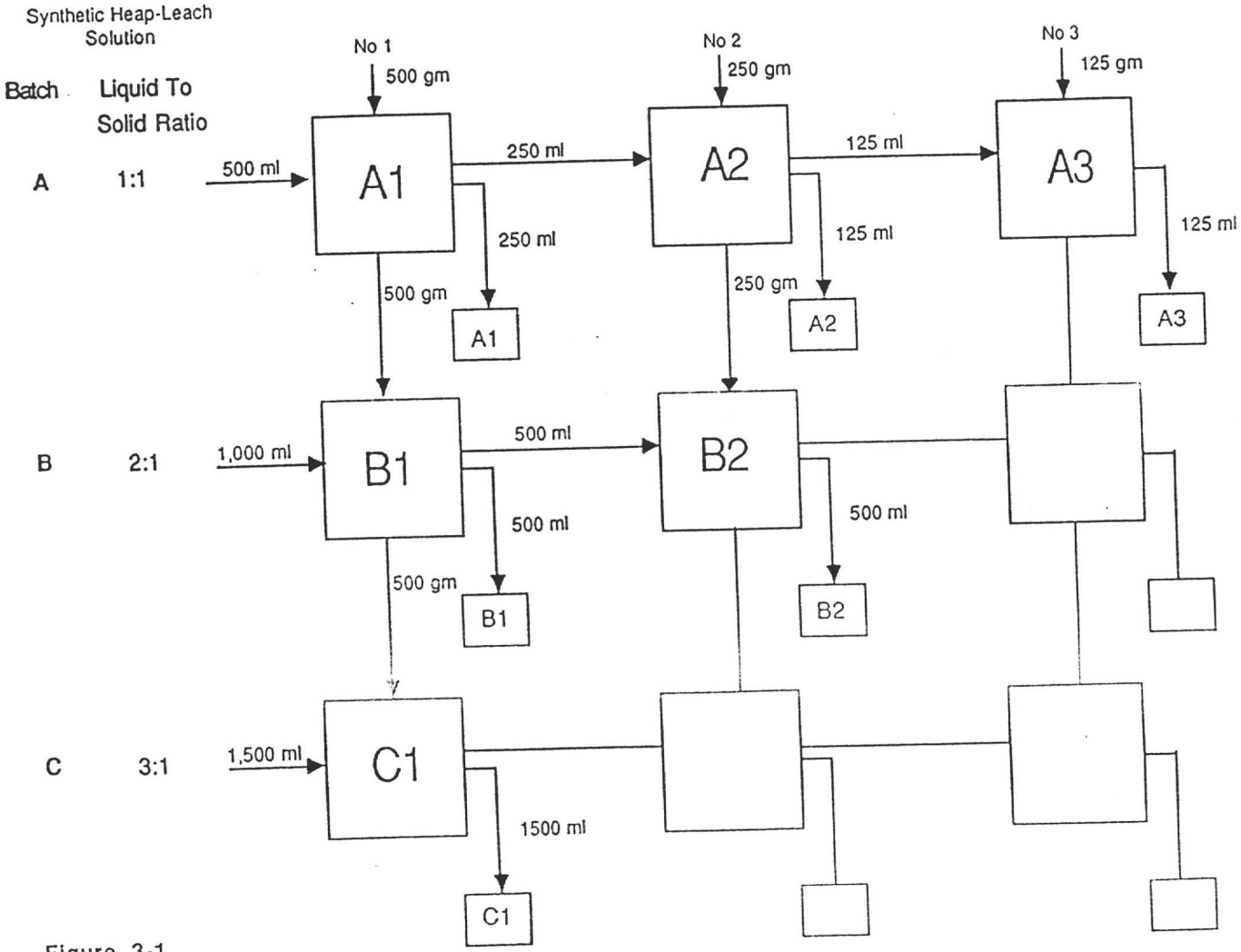

Figure 3-1

000211

GEOCHEMICAL ENGINEERING INCORPORATED

4.0 CONCLUSIONS

The results of the geochemical analyses and the sequential batch testwork lead to the following conclusions:

1. The mineralogical and geochemical properties of the clay-subliner sample are typical of natural materials which retard or attenuate the movement of chemical constituents.

2. The principal clay-forming minerals in the clay-subliner sample are smectite or montmorillonite-type clays. Trace amounts of organic carbon and iron hydrous-oxides are present in the material. Most importantly, the clay-subliner material is capable of neutralizing the alkaline pH of heap-leach solutions.

3. By neutralizing alkalinity, favorable pH conditions are established which promote the functioning of geochemical mechanisms which immobilize heavy metals such as arsenic, cadmium, and mercury, and degrade or volatilize cyanide.

4. Sequential batch testwork confirms that the clay-subliner material will interact with any unlikely seepage and is able to attenuate potential ground-water contaminants such as arsenic, cadmium, mercury, and cyanide.

A. LABORATORY PREPARATION OF HEAP-LEACH SOLUTION

PROCEDURE:

1. Air-dry, mix and composite ore sample;
2. Weigh 10 pounds of ore composite and transfer to leach vessel;
3. Introduce 10 liters of water from No 2 well, and agitate mixture (0.31% solids);
4. Measure pH of mixture after about 15 minutes of agitation;
5. Add 9 grams of lime ($Ca(OH)_2$) to mixture amd agitate;
6. Measure pH of mixture after about 15 minutes of agitation;
7. If pH is alkaline (>9.0), add 2.5 grams of NaCN and agitate;
8. Measure pH of mixture after first 15 minutes and each 2 hours thereafter (during first 8 hours of mixing);
9. Agitate for 24 hours;
10. Let stand , measure pH and decant clear solution for use in sequential batch-contact tests.

B. GEOCHEMICAL CHARACTERIZATION OF CLAY-LINER MATERIAL

PROCEDURE:

1. Air-dry, mix and composite clay-liner sample;
2. Analyze composite sample for the following:
   a. Cation-exchange capacity and exchangeable cations;
   b. soil pH and base-neutralizing potential;
   c. organic carbon content;
   d. acid-soluble iron and manganese content
   e. clay-sized material
   f. bulk-mineral analysis and clay-mineral analysis

C. SEQUENTIAL BATCH-CONTACT TESTS

PROCEDURE:

1. As of Figure 1

SEQUENTIAL BATCH TESTWORK - PBR MINERALS, INC.

CLAY - SUBLINER SAMPLE

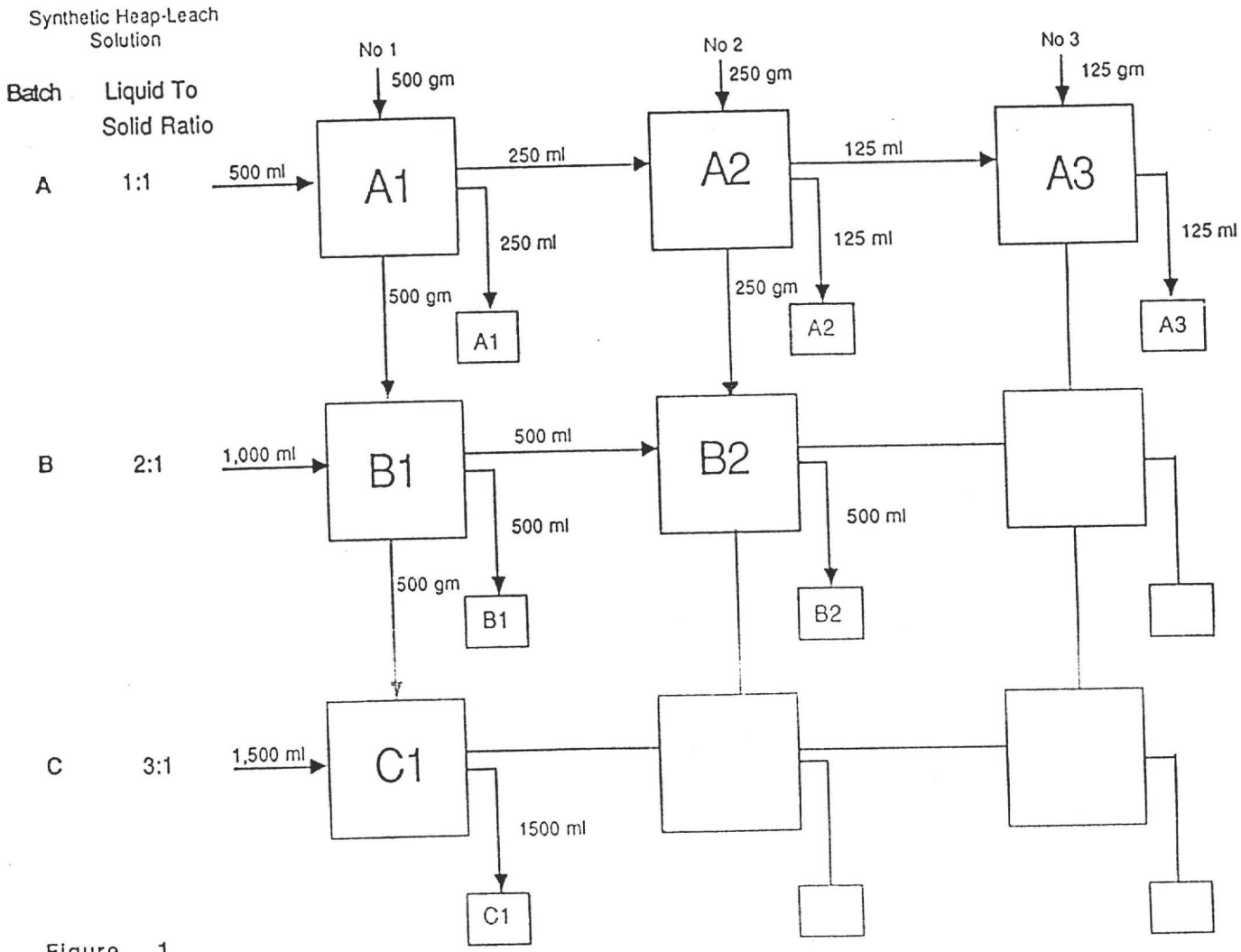

Figure 1

000214

GEOCHEMICAL ENGINEERING INCORPORATED

Western Atlas International
A Litton/Dresser Company

CORE LABORATORIES

Analytical Report

880487

GEOCHEMICAL ENGINEERING INCORPORATED

The analysis, opinions or interpretations contained in this report are based upon observations and material supplied by the client for whose exclusive and confidential use this report has been made. The interpretations or opinions expressed represent the best judgment of Core Laboratories. Core Laboratories assumes no responsibility and makes no warranty or representations, express or implied, as to the productivity, proper operations or profitableness however of any oil, gas, coal or other mineral, property, well or sand in connection with which such report is used or relied upon for any reason whatsoever

Western Atlas International
A Litton/Dresser Company

CORE LABORATORIES

ANALYTICAL REPORT

July 14, 1988

Client Sample I.D.		KBR Minerals Ore Sample	KBR Minerals Clay Liner
Lab Sample I.D. (880487)		#1	#2
PARAMETER	UNITS		
% Moisture-Air Dry	%	3.21	4.13
* Soil pH (1:1 paste)	pH Units	----	7.58
Cation Exchange Cap.	meq/100gm	----	14.7
Exchangeable Cations			
Calcium	meq/100gm	----	39.3
Magnesium	meq/100gm	----	3.64
Sodium	meq/100gm	----	1.07
Potassium	meq/100gm	----	0.23
Acid Soluble Fe	%	----	0.61
Acid Soluble Mn	%	----	0.02
Organic Carbon (W.B.)	%	----	0.11
Clay Content	%	----	35.0
Base Neutralizing Cap.	meq/gm	----	6.4

The analysis, opinions or interpretations contained in this report are based upon observations and material supplied by the [illegible] for whose exclusive and confidential use this report has been made. The interpretations or opinions expressed represent the best judgment of Core Laboratories. Core Laboratories [illegible] no responsibility and makes no warranty or representations, express or implied, as to the productivity, proper operations or profitableness however of any oil, gas, coal or other mineral, property, well or sand in connection with which such report is used or relied upon for any reason whatsoever

Western Atlas International
A Litton/Dresser Company

CORE LABORATORIES

ANALYTICAL REPORT

July 14, 1988

The following are results on extracts from bottle roll tests performed as illustrated in Figure 1 (Copy attached). The solution used for each test (Heap Leach Solution - 880487-3) was prepared following the directions provided (A - attached). The solids used in each test was the PBR Minerals Clay Liner Material - 880487-2.

Client Sample I.D. (KBR Minerals)		Heap Leach Solution	2A1	2A2
Lab Sample I.D. (880487)		#3	#4	#5
PARAMETER	UNITS			
pH	pH Units	11.6	7.90	7.31
Total Cyanide	mg/l	115	72.8	41.6
Free Cyanide	mg/l	120	92.4	37.2
W.A.D. Cyanide	mg/l	138	83.6	33.2
Arsenic	mg/l	0.07	0.01	<0.05
Barium	mg/l	0.06	----	----
Cadmium	mg/l	0.09	0.02	0.01
Chromium	mg/l	<0.01	----	----
Lead	mg/l	<0.01	----	----
Mercury	ug/l	47.4		
Selenium	mg/l	0.04	----	----
Silver	mg/l	2.03	----	----

The analysis, opinions or interpretations contained in this report are based upon observations and material supplied by the client for whose exclusive and confidential use this report has been made. The interpretations or opinions expressed represent the best judgment of Core Laboratories. Core Laboratories assumes no responsibility and makes no warranty or representations, express or implied, as to the productivity, proper operations or profitableness however of any oil, gas, coal or other mineral, property, well or sand in connection with which such report is used or relied upon for any reason whatsoever.

Western Atlas International
A Litton/Dresser Company

CORE LABORATORIES

ANALYTICAL REPORT

July 14, 1988

The following are results on extracts from bottle roll tests performed as illustrated in Figure 1 (Copy attached). The solution used for each test (Heap Leach Solution - 880487-3) was prepared following the directions provided (A - attached). The solids used in each test was the PBR Minerals Clay Liner Material - 880487-2.

Client Sample I.D. (KBR Minerals)		2B1	2A3	2B2
Lab Sample I.D. (880487)		#6	#7	#8
PARAMETER	UNITS			
pH	pH Units	9.03	7.51	8.28
Total Cyanide	mg/l	98.8	15.8	55.2
Free Cyanide	mg/l	95.6	16.6	62.8
W.A.D. Cyanide	mg/l	81.6	4.20	50.0
Arsenic	mg/l	<0.01	<0.05	0.01
Cadmium	mg/l	0.05	<0.01	0.03
Mercury	mg/l			

The analysis, opinions or interpretations contained in this report are based upon observations and material supplied by the client for whose exclusive and confidential use this report has been made. The interpretations or opinions expressed represent the best judgment of Core Laboratories. Core Laboratories assumes no responsibility and makes no warranty or representations, express or implied, as to the productivity, proper operations or profitableness however of any oil, gas, coal or other mineral, property, well or sand in connection with which such report is used or relied upon for any reason whatsoever.

Western Atlas International
A Litton Dresser Company

CORE LABORATORIES

ANALYTICAL REPORT

July 14, 1988

The following are results on extracts from bottle roll tests performed as illustrated in Figure 1 (Copy attached). The solution used for each test (Heap Leach Solution - 880487-3) was prepared following the directions provided (A - attached). The solids used in each test was the PBR Minerals Clay Liner Material - 880487-2.

Client Sample I.D. (KBR Minerals) 2C1

Lab Sample I.D. (880487) #9

PARAMETER	UNITS	
pH	pH Units	9.31
Total Cyanide	mg/l	87.6
Free Cyanide	mg/l	100
W.A.D. Cyanide	mg/l	83.6
Arsenic	mg/l	<0.01
Cadmium	mg/l	0.07
Mercury	mg/l	

The analysis, opinions or interpretations contained in this report are based upon observations and material supplied by the client for whose exclusive and confidential use this report has been made. The interpretations or opinions expressed represent the best judgment of Core Laboratories. Core Laboratories assumes no responsibility and makes no warranty or representations, express or implied, as to the productivity, proper operations or profitableness however of any oil, gas, coal or other mineral, property, well or sand in connection with which such report is used or relied upon for any reason whatsoever.

X-RAY DIFFRACTION ANALYSES

FOR

CORE LABORATORIES - AURORA

Western Atlas International
A Litton Dresser Company

CORE LABORATORIES

5295 Hollister Road
Houston, Texas
77040-6295
(713) 460-9600

June 6, 1988

Core Laboratories - Aurora
1300 South Potomac Suite 130
Aurora, CO 80012

ATTN: Mr. Doug Lempke

Subject: X-Ray Diffraction Analyses
Sample No.: 880487-2
File No.: 288283

Dear Mr. Lempke:

This report presents the results of an X-ray diffraction analysis performed on one (1) submitted sample (your sample number 880487-2). The sample was received by the Reservoir Geology/Petrographic Services Group of Core Laboratories on June 1, 1988. This report provides the analytical procedures as well as the results (see Table 1). Note that, due to sample heterogeneity, the entire sample was ground in a mortar and pestle and passed through a 40 mesh sieve. This was done in order that a representative sample could be obtained. Please advise us if you would like the sample returned to you.

It has been a pleasure performing this study for Core Laboratories - Aurora. Should any questions arise, or if we can be of further assistance, please feel free to contact us.

Sincerely,

CORE LABORATORIES, INC.

William L. Reese
XRD Analyst

Michael L. Dixon
Manager, Houston
Reservoir Geology/
Petrographic Services

[illegible] information and materials supplied by the [illegible] for the exclusive confidential use of the [illegible] employees assume no responsibility and [illegible] any expressed or implied warranty [illegible] or profitableness of any oil, gas or other mineral activity in which such has [illegible] in connection with which such has [illegible] uses or interpretations [illegible] as to the [illegible] used or relied upon.

ANALYTICAL PROCEDURES

X-Ray Diffraction Analysis

The samples selected for quantitative X-ray Diffraction Analysis are disaggregated with a mortar and pestle, weighed and transferred to deionized water, where further disaggregation is performed with a sonic probe. The samples are then centrifugally size-fractionated into sand/silt (>4 microns) and clay-size (<4 microns) fractions. The suspended clay-size fractions are decanted and vacuum-deposited on silver metal membrane filters to produce oriented mounts. Each clay mount is analyzed dry (relative humidity = 50%) and after treatment with ethylene glycol. If necessary, samples are analyzed a third time following heat treatment (375°C for one hour).

The sand/silt fractions of each sample are dried and weighed to determine weight loss due to the removal of clay-size material. The dried sand/silt fractions are then mixed with alumina (Al_2O_3) as an internal standard and ground in water to a fine powder using a micronizing mill. The resultant slurries are dried, disaggregated and packed into aluminum powder holders using a modified pellet press.

Quantitative XRD analyses are performed using an automated Philips 3620 powder diffractometer. The weight percentages of minerals present in the sand/silt fractions are determined using internal standard ratio techniques. The weight percentages of the various clay minerals (and other clay-size rock forming minerals) in the clay-size fractions are determined by Lorentzian profile fitting/empirical peak-area-ratio methods. The whole-rock compositions are then calculated by mathematically combining the XRD data from both size fractions.

Compositions and species of clay minerals detected in the clay-size fractions are determined according to procedures outlined by Weaver (1956), Jonas and Brown (1959), Carroll (1970), Reynolds (1980), and Srodon (1980). The detectability limit is 0.5% - 1.0% for crystalline phases present in the size fractions analyzed.

Western Atlas International
A Litton Dresser Company

CORE LABORATORIES

5295 Hollister Road
Houston, Texas
77040-5295
(713) 460-9600

Core Laboratories - Aurora
Sample No. 880487-2

File: 288283

TABLE 1

X-RAY DIFFRACTION (XRD) DATA
(Weight Percent)

Sample:	1
Bulk Mineralogy (Calculated)*	
Quartz	24
Feldspar	06
Plagioclase	02
K-Feldspar	04
Calcite	46
Clay Minerals	24
	100%
Relative Clay Abundances (Normalized to 100%)	
Kaolinite	09
Chlorite	--
Illite	16
Mixed-layer** Illite/Smectite	75(80)
	100%

* Bulk mineralogy is calculated from sand/silt-size and clay-size XRD data.

** Numbers in ( ) are percent expandable smectite interlayers in mixed-layer clays.

Report is based upon information and materials supplied by the client and is prepared for the exclusive confidential use of the client. The Core Laboratories Inc. employees assume no responsibility and make no representations or warranties, expressed or implied, as to the productivity, proper operation, or profitableness of any oil, gas or other mineral activity in connection with which such report is used or relied upon.

~ 9/1/88

QUALITY CONTROL PLAN

FOR

CLAY SUBLINER PLACEMENT

GRAND CENTRAL LEACHING FACILITY

PBR Minerals, Inc.

Tombstone, Arizona

GEOCHEMICAL ENGINEERING
INCORPORATED

000224

1.0 SCOPE OF QUALITY CONTROL

QC shall be provided for the following:

(1) Earthwork including excavation, preparation of foundations, and construction of embankments,
(2) Placement and compaction of the clay subliner under leach pads and ponds and clay pad for Spent Ore Disposal Area.

1.1 Personnel

The Quality Control (QC) Officer or his designated representative shall verify that the work is performed in accordance with design. Approval of the construction covered in each of the following sections shall be documented in writing by the QC Officer in accordance with the QC procedures listed in this plan.

1.2 Earthwork

The QC Officer will take soil samples and perform moisture-density tests, gradations and other tests to ascertain that the work is being performed in compliance with the design. Samples may be taken at the place of excavation, stockpiles, or on the fill itself. The QC Officer will conduct the density and other tests on the materials and related laboratory testing as frequently as deemed necessary.

1.2.1 Excavation

The QC Officer shall verify that the excavation for the Barren, Pregnant, and Neutralization Pond, Leach Pads, Diversion Ditches, Spent Ore Disposal Area, and related facilities are made to the lines, grades, and dimensions of the design. The excavations shall be observed during construction. Documentation of the measurements and surveys shall be reviewed by the QC Officer.

1.2.2 Preparation of Foundation

The QC Officer shall verify that the foundation areas for the pond embankments, clay subliner, and Spent Ore Disposal Area are prepared in accordance with the design. Foundation preparation shall be observed during construction. The foundations shall be approved by the QC Officer prior to placement of embankment materials or the clay subliner.

1.2.3 Materials

Materials for construction of the earthfill embankments and clay subliner consist of materials excavated from the construction area or materials imported from the clay borrow area. These materials shall be approved by the QC Officer. The following Quality Control Procedures shall be used to evaluate borrow material:

Procedure	Procedure No.
(1) Soil Classification for Engineering Purposes	QC-4
(2) Soils Finer than No. 200 Sieve	QC-5
(3) Particle Size Analysis	QC-6

(4) Moisture Content of Soils QC-7
(5) Sampling of Aggregates and Soils QC-9

1.2.4 Placement and Compaction

The QC Officer shall verify the following:
(1) Placement of earthfill is done in accordance with the design.
(2) The placement of materials meet the following requirements:
  (a) The correct type of material is placed.
  (b) The material being placed is free of unsuitable material.
  (c) The material is placed to the lines and grades designated in the design.

Factors including materials uniformity, lift thickness, compactive effort and load counts of materials placed, shall be noted. Quality Control testing shall be conducted in accordance with the following Quality Control Procedures.

	Procedure	Procedure No.
(1)	In-Place Density Tests	QC-1
(2)	Laboratory Standard Compaction Test	QC-2
(3)	Soil Classification for Engineering Purposes	QC-4
(4)	Soils Finer than No. 200 Sieve	QC-5
(5)	Particle Size Analysis	QC-6
(6)	Moisture Content of Soils	QC-7
(7)	Sampling of Aggregates and Soils	QC-9

1.2.5 Moisture and Density Control

The QC Officer shall verify that the moisture content and density of the compacted materials are in accordance with the design and that necessary reworking is performed as required. The Quality Control Procedures are listed in Section 1.2.4.

1.2.6 Frequency of Quality Control Tests

The frequency of the Quality Control Tests for earthwork shall be as follows:
(1) The frequency of the field density and moisture tests shall be not less than one test for each 500 cubic yards of placed fill material.
(2) There shall be at least one field density and moisture test for each lift of fill material placed and compacted.
(3) Gradations and Atterberg limits (Classification for Engineering Purposes) of compacted fill materials shall be performed at a frequency of not less than each 1,000 cubic yards of placed clay subliner or each 5,000 cubic yards of compacted earthfill.
(4) For fill materials where moisture content tests are correlated with optimum moisture content as determined by the Standard Compaction Tests, frequency of moisture content tests of compacted fill material shall not be less than one test for each 500 cubic yards of compacted fill materials.
(5) For fill materials where field density tests of compacted fill material are correlated with laboratory maximum density as determined by the Standard Compaction Test, frequency of field density testing for compacted fill material shall not be less than one test for each 500 cubic yards of compacted fill materials.

(6) Frequency of laboratory standard Proctor compaction tests shall be such that maximum densities are determined for the range of materials being placed in the fill; however, frequency of compaction tests shall not be less than one test for each 5,000 cubic yards of compacted fill material.

1.2.7 Compliance Report

A Compliance Report shall be prepared for the earthwork.

1.3 Documentation of Quality Control

Written records shall be maintained for each construction day, covering the subject construction activities. The written records and reports shall be in accordance with the respective QC Procedures and shall include results of all tests conducted. The originals of all documents shall be maintained in the PBR Project Files.

2.0 QUALITY ASSURANCE

2.1 Personnel

Quality Assurance consisting of audits and cross checks on the Quality Control functions, shall be provided by the Quality Assurance (QA) Officer.

2.2 QA Activities

The QA Officer shall implement the program by performing the following functions:

(1) Prequalify QC Personnel
(2) QC Technician training
(3) Verification of effectiveness of QC Personnel
(4) Verification of test procedures and results by spot retest
(5) Equipment checks
(6) Review of calculations and documentation.

2.3 Documentation

Each QA Activity shall be documented in writing and shall be kept in the PBR Project Files.

QUALITY CONTROL PROCEDURE

FOR

IN-PLACE DENSITY TESTS

INDEX

Page No.

1.0 EQUIPMENT 1
1.1 Nuclear Gauge Method 1
1.2 Sand Cone Method 1
1.3 Rubber Balloon Method. 2
1.4 Drive Cylinder Method. 3
2.0 METHODOLOGY 5
2.1 Objective. 5
2.2 Test Procedures. 5
2.2.1 Nuclear Gauge Method. 5
2.2.2 Sand Cone Method. 6
2.2.3 Rubber Balloon Method 6
2.2.4 Drive Cylinder Method 6
2.3 References 6
3.0 CALIBRATION 7
3.1 Nuclear Gauge Method 7
3.2 Sand Cone Method 7
3.3 Water Balloon Method 7
3.4 Drive Cylinder Method. 7
4.0 REPORTING 8
4.1 Forms. 8
4.2 Records. 8

1.0 EQUIPMENT

1.1 Nuclear Gauge Method

(1) Gauge - Instrument containing all electronic modules, rechargeable battery packs and nuclear sources.

(2) Reference Standard Block - This block serves to establish the standard counts against which all measurements are proportional; second, it serves as a known repeatable reference for calibration.

(3) Drill Rod - Used with a hammer to punch a hole required for direct transmission measurements.

(4) Scraper Plate - Functions as a guide for the drill rod and aids in smoothing the test site and removing the drill rod.

(5) AC and DC Battery Chargers - The AC charger will operate from 115 or 230 volt power. The DC Charger will operate when plugged into a 12 volt, negative ground, vehicle cigarette lighter.

1.2 Sand Cone Method

(1) Density Apparatus - Jar with volume of approximately 1 gallon, metal cone detachable from jar, square metal plate with flanged center hole.

(2) Sand - clean, dry, uniform, uncemented, durable and free-flowing.

(3) Balances - (a) with a capacity of 10 kg accurate to 2g below 7000g and 3g above 7000g, (b) with a capacity of 2000g accurate to 0.1%.

(4) Drying Equipment - Oven as specified in ASTM Method D-2216.

(5) Miscellaneous Equipment - Digging tools, small brush, plastic bags or airtight container.

1.3 Rubber Balloon Method

(1) Calibrated Vessel - A calibrated vessel designed to contain a liquid within a relatively thin, flexible, elastic membrane (rubber balloon) for measuring the volume of the test hole under the conditions of this method. The apparatus shall be equipped so that an externally controlled pressure or partial vacuum can be applied to the contained liquid. It shall be of such weight and size that it will not cause distortion of the excavated test hole and adjacent test area during the performance of the test. Provision shall be made for placing weights (surcharge) on the apparatus. There shall be a volume indicator for determining to the nearest 0.00025 cu. ft. any change in volume of the test hole. The flexible membrane shall be of such size and shape as to fill the test hole completely without wrinkles or folds when inflated within the test hole, and its strength shall be sufficient to withstand such pressure as is necessary to ensure complete filling of the test hole.

The description and requirements given in this Section are intended to be nonrestrictive. Any apparatus using a flexible (rubber) membrane and liquid that can be used to measure the volume of a test hole in soil under the conditions of this method to an accuracy within 1.0 percent is satisfactory.

(2) Balances - A balance or scale of approximately 20 kg capacity accurate to 1.0g (or 35 lb capacity accurate to 0.01 lb) and a balance of 1600g capacity accurate to 0.1g.

(3) Drying Apparatus - A stove, oven or other apparatus proven suitable for drying soil or moisture samples.

(4) Miscellaneous Equipment - Small pick, chisels, or spoons for digging test holes; plastic bags, buckets with lids, or other suitable metal containers that can be closed for retaining the soil taken from the test holes; thermometer for determining temperature of water; small paint brush.

1.4 <u>Drive Cylinder Method</u>

(1) Density Apparatus - The essential elements of the apparatus consist of calibrated drive cylinders, a detachable driving head and a drive hammer. Any size of drive cylinders and driving apparatus which will give an accuracy within one percent when checked by the sand cone or other acceptable in-place density method is satisfactory.

(2) Balances - Any standard laboratory balance with a capacity equal to the mass of soil and cylinder and sensitive to 0.1g is satisfactory for obtaining the net mass of the sample.

(3) Drying Equipment - A stove or oven for drying moisture samples.

(4) Miscellaneous Equipment - A shovel is required for digging out the cylinders after they have been driven into the soil and a steel straightedge with one edge sharpened is needed to cut the ends of the sample flush with the cylinder. Seamless tin cans with lids, or other suitable containers, for retaining the moisture samples are necessary, as well as miscellaneous small tools.

2.0 METHODOLOGY

2.1 Objective

The objective of this test is to determine the density of in-place soils/aggregates/tailings/sludges or a combination of these materials.

2.2 Test Procedures

The tests shall be conducted in accordance with the Standard Procedures referenced below. The percentage of maximum dry density shall be calculated based on the maximum dry density obtained from a compaction test performed on that material type. Compaction tests shall be performed for each material type tested and at intervals in accordance with the Specifications.

2.2.1 Nuclear Gauge Method

ASTM D-2922-81 (Density)
ASTM D-3017-78 (Moisture)
AASHTO T-238-79 (Density)
AASHTO T-239-76 (Moisture)

2.2.2 Sand Cone Method

ASTM D-1556-82

AASHTO T-191

2.2.3 Rubber Balloon Method

ASTM D-2167-66 (1972)

AASHTO T-205-64 (1982)

2.2.4 Drive Cylinder Method

AASHTO T-204-64 (1982)

2.3 <u>References</u>

(1) Annual Book of ASTM Standards Volume 04.08

(2) AASHTO Part 2, Tests

3.0 CALIBRATION

3.1 Nuclear Gauge Method

The nuclear gauge shall be calibrated daily or in accordance with the manufacturer's recommendations.

3.2 Sand Cone Method

The density equipment, sand and balances shall be calibrated at least monthly.

3.3 Water Balloon Method

Density equipment and balances shall be calibrated at least monthly.

3.4 Drive Cylinder Method

Balances for moisture and density determinations shall be calibrated at least monthly.

4.0 REPORTING

4.1 Forms

F-3 Fill Observation and Testing (for Nuclear Density Test Data)

F-5 Field Density Tests (Sand Cone and Water Balloon)

F-6 Moisture-Density Worksheet

4.2 Records

Completed reports shall be maintained in the PBR Project Files.

F-3 FILL OBSERVATION & TESTING

Project No. _____

Date _____

Daily Report No. _____

Technician _____

Approved By _____

TEST NO	LOCATION	DEPTH OR ELEVATION (FEET)	LABORATORY		FIELD		PERCENT COMPACTION	SOIL TYPE
			MAXIMUM DRY DENSITY (pcf)	OPTIMUM MOISTURE CONTENT (%)	DRY DENSITY (pcf)	MOISTURE CONTENT (%)		

SPECIFICATION COMPACTION & MATERIAL

TYPE AND NUMBER OF EARTH MOVING UNITS

TYPE AND NUMBER OF COMPACTION UNITS

NUMBER OF PASSES THICKNESS OF LIFT

METHOD OF ADDING MOISTURE

☐ FILL TESTED MEETS SPECIFICATIONS.

☐ FILL TESTED DOES NOT MEET SPECIFICATIONS AS INDICATED BY TEST NO.(S)
AND SHOULD BE REMOVED OR REWORKED

☐ CONTRACTOR ADVISED

OBSERVATIONS

000238

F-5 FIELD DENSITY TEST (Sand cone, Balloon)

Technician _____ Project No. _____

Approved By _____ Date _____

Sample No. _____

Description of Soil _____

Laboratory Data from Field Test

Sand-cone method

Wt. of wet soil – can _____

Wt. of can _____

Wt. of wet soil, W _____

Wt. of wet soil – can _____

Wt. of dry soil – can _____

Wt. of can _____

Wt. of dry soil _____

Water content w % = _____

Balloon method

Wt. of wet soil – can _____

Wt. of can _____

Wt. of wet soil, W _____

Wt. of wet soil – can _____

Wt. of dry soil – can _____

Wt. of pan _____

Wt. of dry soil _____

Water content w % = _____

Field Data

Sand-cone method

Type of sand used _____

Unit wt. of sand, γ_{sand} = _____ pcf

Wt. of jug – cone before use _____ lb

Wt. of jug – cone after use _____ lb

Wt. of sand used (hole – cone) _____ lb

Wt. of sand in cone (from calibration) _____ lb

Wt. of sand in hole, W' _____ lb

Vol. of hole, $V_h = W'/\gamma_{sand}$ = _____ cu ft

Balloon method

Correction factor (CF) = _____

Final scale reading _____ cu ft

Initial scale reading _____ cu ft

Vol. of hole, V_h _____ cu ft

Vol. of hole = V_h (CF) _____ cu ft

Density of Soil

Wet density $\gamma_{wet} = W/V_h$ = _____ pcf

Dry density $\gamma_{dry} = \gamma_{wet}/(1 + w)$ = _____ pcf

I 'IA. — — F-6 **MOISTURE & NSITY** I. E_ O. ___ ___

ROVED BY ______________ **WORKSHEET** DATE ______________

FICATION		TEST RESULTS				MOISTURE DETERMINATION				DENSITY DETERMINATION				
SAMPLE NO.	SAMPLE TYPE	% MOISTURE	DRY DENSITY PCF	UNIF. CLASS	DESCRIPTION	DISH NO.	WT. OF WET SOIL AND DISH	WT. OF DRY SOIL AND DISH	WT. OF DISH	SAMPLE LENGTH IN.	SAMPLE DIAMETER IN.	WT. OF WET SOIL AND TARE	WT. OF TARE	WT. OF WET SOIL

000240

QUALITY CONTROL PROCEDURE

FOR

LABORATORY STANDARD COMPACTION TEST

INDEX

Page No.

1.0 EQUIPMENT 1

2.0 METHODOLOGY 2

2.1 Objective. 2

2.2 Test Procedure 2

2.3 References 2

3.0 REPORTING 3

3.1 Forms. 3

3.2 Records. 3

1.0 EQUIPMENT

(1) Cylindrical molds, 4-inch and 6-inch diameters.

(2) Rammer, either manual or mechanical, able to drop 12 inches and weighing 5.5 lb.

(3) Balance or scale, a) with a capacity of 20 kg, accurate to 1.0g, and b) with a capacity of 1000g, accurate to 0.01g

(4) Oven, 110 $\pm 5^{\circ}C$.

(5) Straightedge.

(6) Sieves: 3-inch, 3/4-inch, and No. 4.

(7) Mixing tools: mixing pan, spoon or spatula.

(8) Moisture containers.

2.0 METHODOLOGY

2.1 Objective

The objective is to determine the relationship between the material moisture content and density when compacted in a mold of a given size with a 5.5 lb. (2.49 kg) rammer dropped from a height of 12 inches (305 mm) to determine maximum density and optimum moisture content for each soil type encountered in fill placement operations.

2.2 Test Procedure

The procedure for performing this test shall be in accordance with ASTM Method D-698-78.

2.3 References

ASTM Volume 04.08 D-698-78.

3.0 REPORTING

3.1 Forms

F-7 Laboratory Compaction Test

F-8 Moisture-Density Relationships -1

F-9 Moisture-Density Relationships -2

3.2 Records

Completed Reports shall be maintained in the PBR Project Files.

F-7 LABORATORY COMPACTION TEST
WORKSHEET

ECHNICIAN _____ PROJECT NO. _____
OVED BY _____ DATE _____

AMPLE NO. _____
SAMPLE DESCRIPTION _____ COLOR _____
ASTM D 698-78 ☐ ASTM D 1557-78 ☐ METHOD: A B C D OTHER _____

TEST DATA

INT NUMBER	1	2	3	4	5	6	7
WT. OF SOIL AND TARE							
MOUNT OF ADDED WATER, WT.							
WT. OF SOIL, WATER & TARE							
OUNT OF WATER ADDED, VOL.							
T. OF MOLD AND WET SOIL							
. OF MOLD							
.OF WET SOIL							
T DENSITY PCF							
DISH NUMBER							
DISH AND WET SOIL							
WT. OF DISH AND SOIL							
. OF DISH							
. OF WATER							
. OF DRY SOIL							
MOISTURE CONTENT %							
DENSITY PCF							

HICH POINT WAS SOIL PUMPING ? _____
HICH POINT WAS SOIL BLEEDING ? _____
TIMUM MOISTURE CONTENT _____ %
XIMUM DRY DENSITY _____ pcf

ROCK CORRECTION DATA
(WEIGHTS ARE PER POINT)

+#4 _____ %= _____ lb.
-#4 _____ %= _____ lb.
100%= _____ lb.

O MENTS: _____

000246

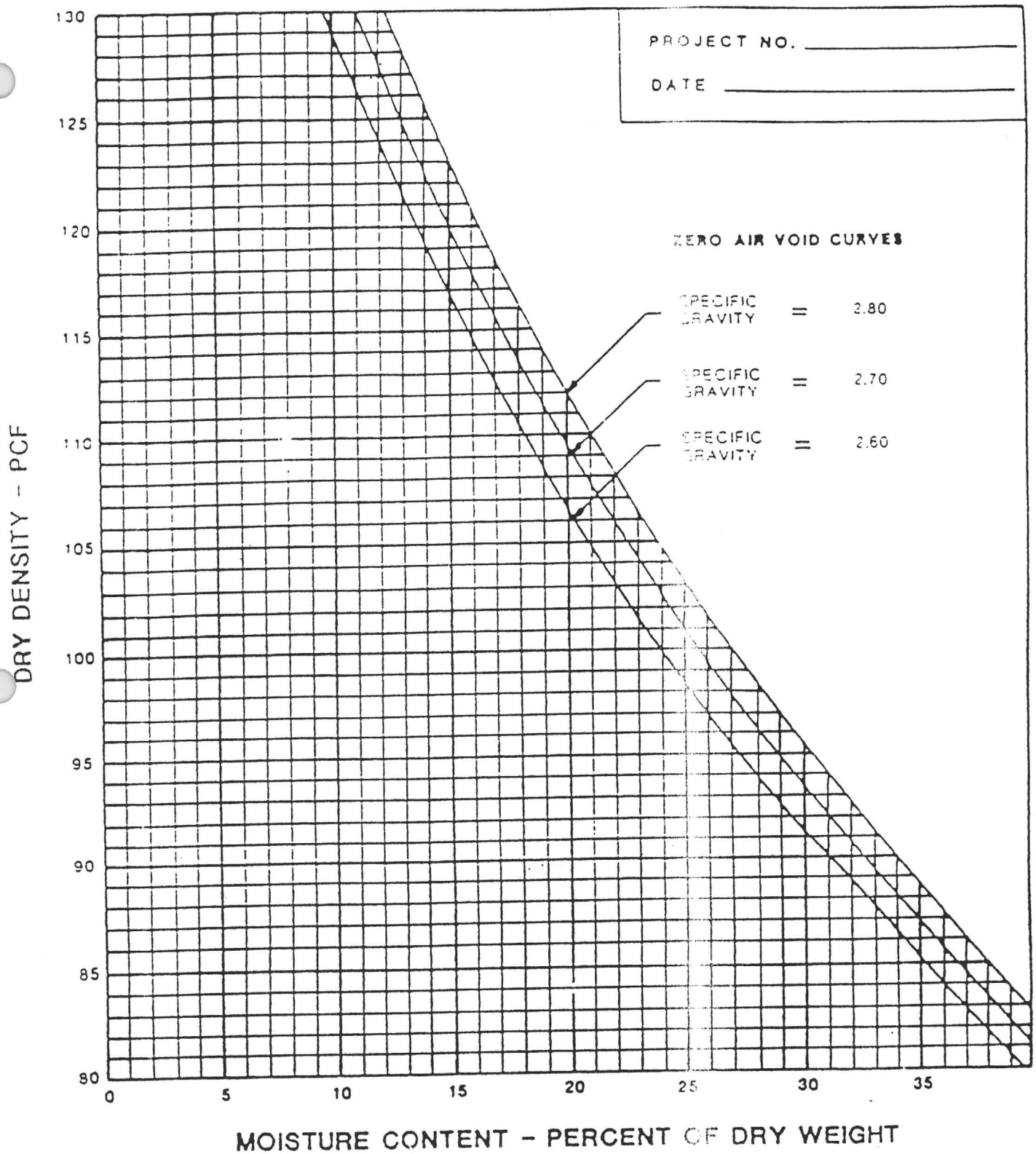

LOCATION :

PLE NO:

MATERIAL DESCIPTION:

MAX. DRY DENSITY : _____ PCF OPT. MOIST. CONTENT : _____ %

LIQUID LIMIT : _____ PLASTICITY INDEX : _____

F-8 MOISTURE-DENSITY RELATIONSHIPS - 1

PROCEDURE:

TECHNICIAN:

000247

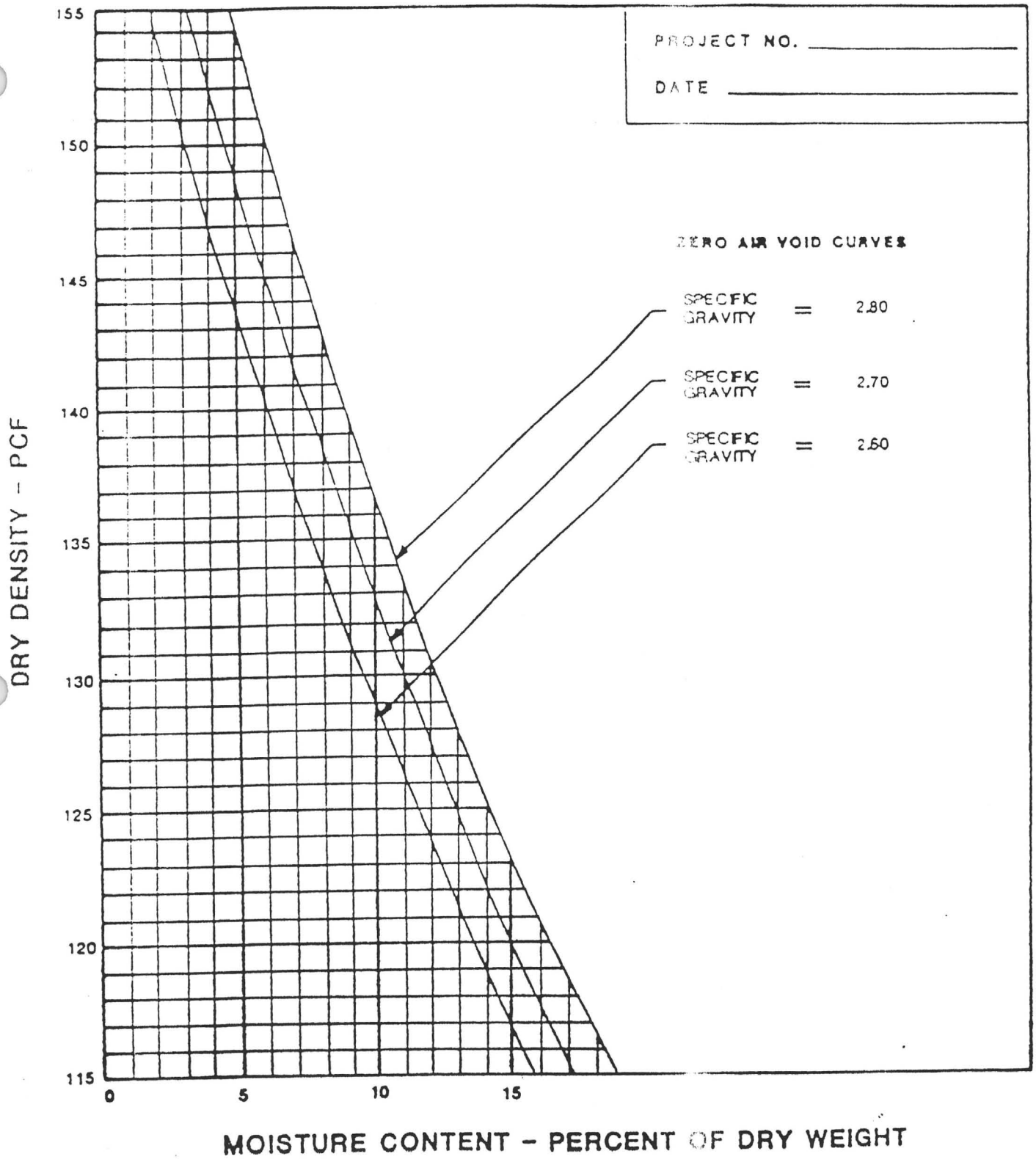

LOCATION :	F-9 MOISTURE-DENSITY RELATIONSHIPS - 2
SAMPLE NO:	
MATERIAL DESCRIPTION:	
MAX. DRY DENSITY : PCF OPT. MOIST. CONTENT : %	PROCEDURE :
LIQUID LIMIT : PLASTICITY INDEX :	TECHNICIAN:

QUALITY CONTROL PROCEDURE

FOR

SOIL CLASSIFICATION FOR ENGINEERING PURPOSES

INDEX

Page No.

1.0 EQUIPMENT AND MATERIALS 1

1.1 Equipment. 1

1.2 Materials. 1

2.0 METHODOLOGY 2

2.1 General. 2

2.2 Test Procedures. 2

2.3 References 3

3.0 REPORTING 4

3.1 Forms. 4

3.2 Records. 4

1.0 EQUIPMENT AND MATERIALS

1.1 Equipment

(1) Sample preparation apparatus - see ASTM D-421 or D-2217.

(2) Particle size analysis apparatus - see ASTM D-422 or D-1140.

(3) Liquid limit apparatus - see ASTM D-4318.

(4) Plastic limit apparatus - see ASTM D-4318.

(5) Classification chart.

1.2 Materials

(1) No. 40 Sieve.

(2) Moisture containers.

(3) Balance, accurate to 0.01g.

(4) Oven, 100 $\pm 5^{o}$c.

2.0 METHODOLOGY

2.1 General

The objective is to determine the classification of soils for engineering purposes in accordance with the Unified Soils Classification System based on particle size and Atterberg limits (liquid limit and plasticity index) of the soil.

2.2 Test Procedures

Analysis to be performed in accordance with ASTM D-2487-83. Other procedures are as follows:

(1) Sample preparation ASTM D-421-85, or
ASTM D-2217-85

(2) Particle size analysis ASTM D-422-63, or
ASTM D-1140-54

(3) Liquid limit ASTM D-4318-84

(4) Plastic limit ASTM D-4318-84.

Based on the test results, the soil shall be classified according to the Unified Soil Classification System.

2.3 References

Annual Book of ASTM Standards, Volume 04.08, D-2487-83. Also the following ASTM standard procedures:

(1) D-421-85

(2) D-2217-85

(3) D-422-63

(4) D-1140-54

(5) D-4318-84.

3.0 REPORTING

3.1 Forms

F-10 Gradation Analysis with Hydrometer Worksheet

F-11 Gradation Analysis Worksheet

F-12 Gradation Test Results

F-13 Atterberg Limits 1-Point Worksheet

F-14 Atterberg, -200, Moisture and Density Worksheet

F-15 Atterberg Limits 3-Point Worksheet

F-17 Summary of Laboratory Test Results

3.3 Records

Completed reports shall be maintained at the PBR Project Files.

F-10 GRADATION ANALYSIS WITH HYDROMETER

WORKSHEET

TECHNICIAN _____ PROJECT NO _____

APPROVED BY _____ DATE _____

SAMPLE NO. _____

VISUAL DESCRIPTION: _____

SAMPLE PREPERATION

RUN BY _____ SIEVING TIME _____

SIEVE SIZE		3"	1 1/2"	3/4"	3/8"	NO.4
OF PAN AND SAMPLE						
WT. OF PAN						
DRY WT. RETAINED						
DRY WT. PASSING						
% OF TOTAL PASSING						
	W% =					

SAMPLE WEIGHTS	WET	DRY
TOTAL SAMPLE		
RETAINED ON NO. 4		
PASSING NO. 4		

SIEVE AND HYDROMETER ANALYSIS

RUN BY _____ SIEVING TIME _____

SIEVE NO.	WEIGHT RETAINED	WEIGHT PASSING	% OF TOTAL PASSING
8 (10)			
16			
30 (40)			
50			
100			
200			
PAN			—
TOTAL			—

FACTOR = $\frac{W\%}{W}$ = _____ = _____

MOISTURE DETERMINATION

	+4 MATERIAL	-4 MATERIAL	HYGRO. MOISTURE	HYDRO. SAMPLE
DISH NO.				
WT. WET SOIL AND DISH				
WT. DRY SOIL AND DISH				
WT. DISH				
WT. OF DRY SOIL		= W		
% MOISTURE				

HYDROMETER ANALYSIS

RUN BY _____

CYLINDER NO. _____ SPECIFIC GRAVITY _____ DISPERSING AGENT _____

DISH NO. _____ DATE _____ AMOUNT _____ ml DATE CALIB. _____

CLOCK TIME	TEST TIME	TEMP. C°	HYD. READ	HYD.* CORR	CORR READ	FACTOR X CORRECTED READING = % OF TOTAL PASSING	% OF TOTAL PASSING	PARTICLE DIAMETER	
	START MIX	—	—	—	—		—	—	
	STOP MIX	—	—	—	—		—	—	
	0.5 min							0.050 mm	
	1.0 min							0.037 mm	
	4.0 min							0.019 mm	
	19 min							0.009 mm	
	60 min							0.005 mm	
	7h 15 min							0.002 mm	
	25h 45 min							0.001 mm	

GRAVEL _____ % SAND _____ % CLAY-SILT _____ %. STORAGE LOCATION _____

* CORRECTION INCLUDES TEMP., MENISCUS, AND DEFLOCULENT

000255

CHNICIAN _____ PROJECT NO. _____

F-11 GRADATION ANALYSIS WORKSHEET

PROVED BY _____ DATE _____

APLE NO.					
SCRIPTION					
I BY _____	RUN BY _____	RUN BY _____	RUN BY _____	RUN BY _____	RUN BY _____
SH NO.					
Y SOIL & DISH					
O SOIL & DISH					
SH WT.					
Y SOIL WT.					

IVE E		CUM. WT. RET	% PASS		CUM. WT. RET	% PASS		CUM. WT. RET	% PASS		CUM. WT. RET	% PASS		CUM. WT. RET	% PASS		CUM. WT. RET	% PASS
5																		
3																		
-1/2																		
3/4																		
3/8																		
#4																		
#8																		
#16																		
#30																		
#50																		
100																		
200																		
1																		

AVEL %					
ID %					
Y-SILT %					
IARKS:					

PLACE WITH #10 & #40 SEIVE WHEN REQUESTED

000259

F-12 GRADATION TEST RESULTS

TECHNICIAN _____ PROJECT NO. _____

APPROVED BY _____ DATE _____

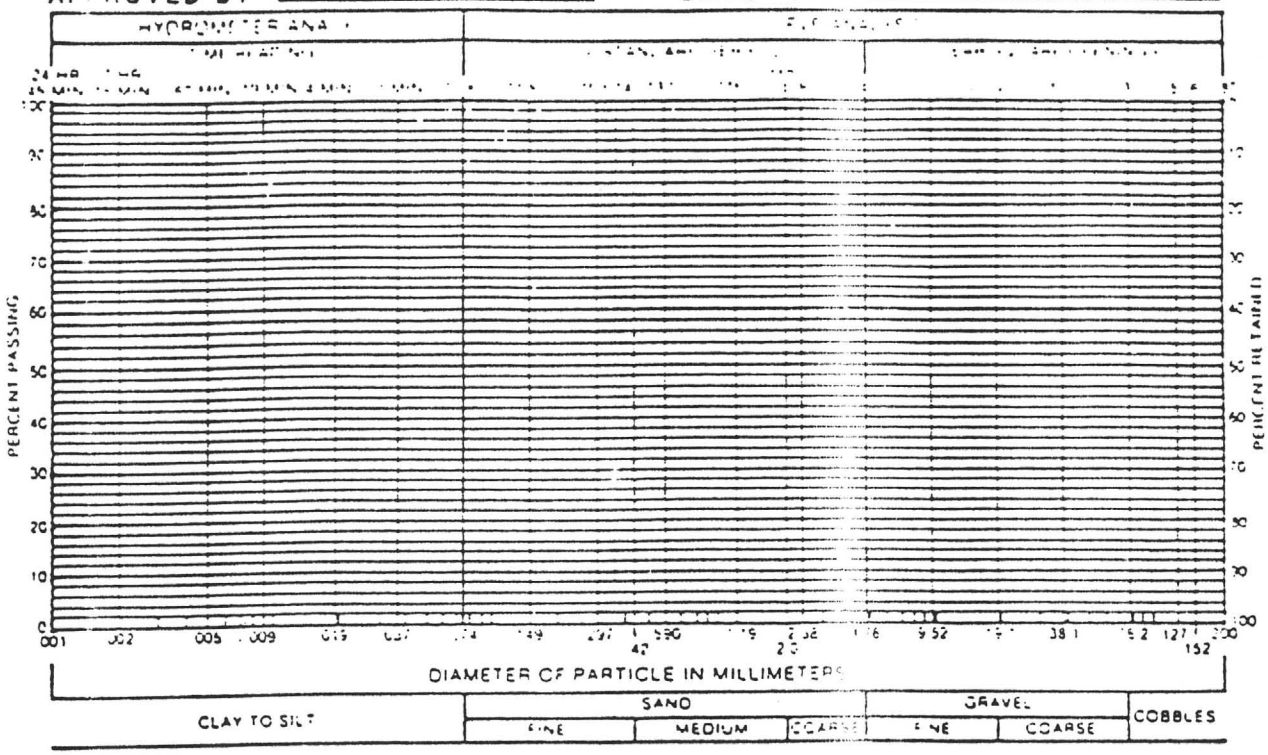

GRAVEL % SAND % SILT AND CLAY %

LIQUID LIMIT % PLASTICITY INDEX %

SAMPLE OF FROM

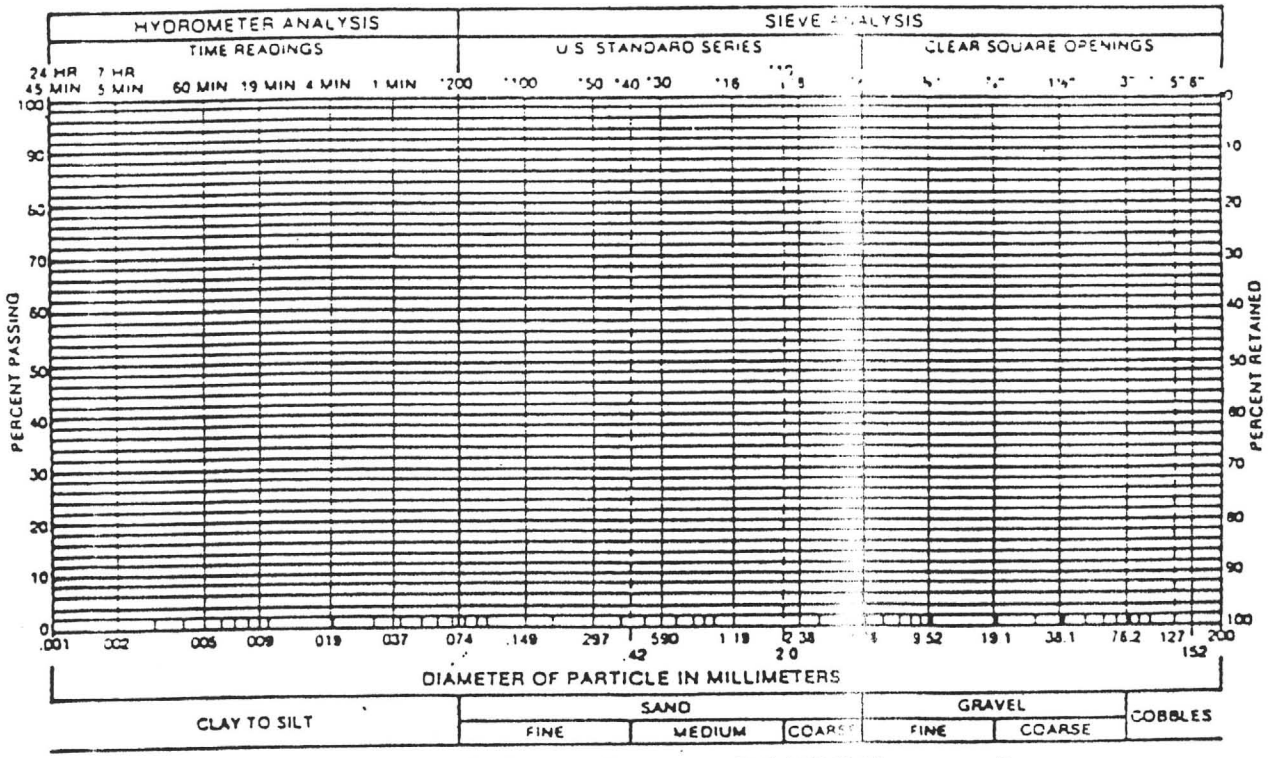

GRAVEL % SAND % SILT AND CLAY %

LIQUID LIMIT % PLASTICITY INDEX %

SAMPLE OF FROM

000257

CI CIA _____ TE ER IM PROJECT NO. _____

1-POI

PROVED BY _____ WORKSHEET DATE _____

LE / DEPTH	/	/	/	/	/
MPLE NO. / RUN BY	/	/	/	/	/
P. DISH / TRAY LOCAT.	/	/	/	/	/

. OF BLOWS	P.L.		P.L.		P.L.		P.L.		P.L.	
SH NO.										
. WET SOIL & DISH										
. DRY SOIL & DISH										
. OF DISH										
. OF WATER										
. OF DRY SOIL										
TER CONTENT Wn										

QUID LIMIT LL					
ASTIC INDEX PI					
ASSIFICATION					

LE / DEPTH	/	/	/	/	/
MPLE NO. / RUN BY	/	/	/	/	/
P. DISH / TRAY LOCAT.	/	/	/	/	/

. OF BLOWS	P.L.		P.L.		P.L.		P.L.		P.L.	
SH NO.										
. WET SOIL & DISH										
. DRY SOIL & DISH										
. OF DISH										
. OF WATER										
. OF DRY SOIL										
TER CONTENT Wn										

QUID LIMIT LL					
ASTIC INDEX PI					
ASSIFICATION					

000258

F-14 ATTERBERG, -200, MOISTURE & DENSITY WORKSHEET

TECHNICIAN _____ PROJECT NO. _____
APPROVED BY _____ DATE _____

SAMPLE NO. _____
SAMPLE DESCRIPTION _____ COLOR _____

ATTERBERG LIMITS	PL	LL
PREP. DISH _____	RUN BY _____	
NO. OF BLOWS		
DISH NO.		
WT. OF WET SOIL & DISH		
WT. OF DRY SOIL & DISH		
WT. OF DISH		
WT. OF WATER		
WT. OF DRY SOIL		
WATER CONTENT		

-200	
RUN BY _____	
DISH NO.	
WT. OF DISH & DRY SOIL	
WT. OF DISH & WASHED SOIL	
WT. OF DISH	
WT. OF -200	
WT. OF TOTAL SOIL, DRY	

LIQUID LIMIT, LL _____
PLASTIC INDEX, PI _____

PERCENT -200 _____ %

MOISTURE CONTENT	
RUN BY _____	
DISH NO.	
WT. OF DISH & WET SOIL	
WT. OF DISH & DRY SOIL	
WT. OF DISH	
WT. OF WATER	
WT. OF DRY SOIL	

DENSITY	
RUN BY _____	
LENGTH	
DIAMETER	
VOLUME	
WT. OF WET SOIL	
WT. OF DRY SOIL	

MOISTURE CONTENT _____ %

DRY DENSITY _____ PCF

REMARKS: _____

F-15 ATTERBERG LIMITS 3-POINT
WORKSHEET

TECHNICIAN _____ PROJECT NO. _____
APPROVED BY _____ DATE _____

SAMPLE NO. _____
DESCRIPTION _____

LIQUID LIMIT DETERMINATION					
TRAY LOCATION					
DISH NO.					
WT. WET SOIL & DISH					
WT. DRY SOIL & DISH					
WT. OF DISH					
WT. OF WATER					
WT. OF DRY SOIL					
WATER CONTENT, w%					
NO. OF BLOWS, N					

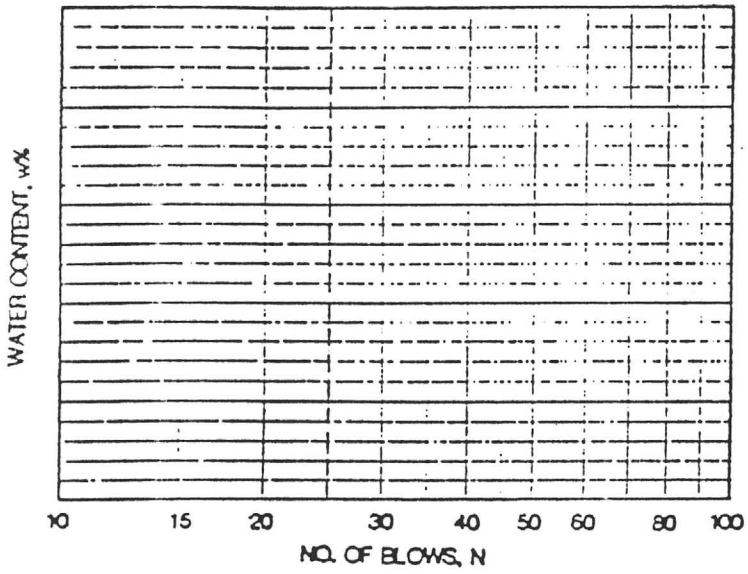

LIQUID LIMIT, LL _____

PLASTIC LIMIT, PL _____

PLASTICITY INDEX, PI _____

PLASTIC LIMIT DETERMINATION					
TRAY LOCATION					
DISH NO.					
WT. OF WET SOIL & DISH					
WT. OF DRY SOIL & DISH					
WT. OF DISH					
WT. OF WATER					
WATER CONTENT, w% - PL					

000260

F- MN Y L RA RY ST SC S

TECHNICIAN _____ PROJECT NO. _____

APPROVED BY _____ DATE _____

SAMPLE NO.	NATURAL MOISTURE CONTENT (%)	NATURAL DRY DENSITY (pcf)	GRADATION		PERCENT PASSING NO 200 SIEVE	ATTERBERG LIMITS		SOIL OR BEDROCK TYPE	COMMENTS
			GRAVEL (%)	SAND (%)		LIQUID LIMIT (%)	PLASTICITY INDEX (%)		

002261

QUALITY CONTROL PROCEDURE

FOR

SOILS FINER THAN NO. 200 SIEVE

INDEX

Page No.

1.0 EQUIPMENT 1

2.0 METHODOLOGY 2

2.1 Objective. 2

2.2 Test Procedure 2

2.3 References 2

3.0 REPORTING 3

3.1 Forms. 3

3.2 Records. 3

1.0 EQUIPMENT

Equipment

(1) U.S. Standard Sieve: No. 40, No. 200.

(2) Containers.

(3) Balance, accurate to 0.1g.

(4) Oven, 100 $\pm 5^{\circ}C$.

2.0 METHODOLOGY

2.1 Objective

The objective of this procedure is to determine the total amount of materials finer than the U.S. Standard No. 200 sieve contained in soil, aggregate or soil aggregate mixture.

2.2 Test Procedure

The tests are to be performed in accordance with the procedure outlined in ASTM D-1140-54.

2.3 References

Annual Books of ASTM Standards, ASTM Procedure D-1140-54 Volume 04.08.

3.0 REPORTING

3.1 Forms

F-11 Gradation Analysis Worksheet

F-14 Atterberg, -200, Moisture and Density Worksheet

F-17 Summary of Laboratory Test Results

3.2 Records

Completed reports shall be maintained in the PBR Project Files.

CHNICIAN _____ PROJECT NO. _____

F-11 GRADATION ANALYSIS WORKSHEET

PROVED BY _____ DATE _____

MPLE NO.					
SCRIPTION					
N BY _____	RUN BY _____	RUN BY _____	RUN BY _____	RUN BY _____	RUN BY _____
SH NO.					
Y SOIL & DISH					
O SOIL & DISH					
SH WT.					
Y SOIL WT.					

IVE E		CUM. WT. RET	% PASS		CUM. WT. RET	% PASS		CUM. WT. RET	% PASS		CUM. WT. RET	% PASS		CUM. WT. RET	% PASS		CUM. WT. RET	% PASS
6																		
3																		
-1/2																		
3/4																		
3/8																		
#4																		
#8																		
#16																		
#30																		
#50																		
100																		
200																		

VEL %					
ID %					
Y-SILT %					
ARKS:					

000267

PLACE WITH #10 & #40 SEIVE WHEN REQUESTED

F-14 ATTERBERG, -200, MOISTURE & DENSITY
WORKSHEET

TECHNICIAN _____ PROJECT NO. _____
APPROVED BY _____ DATE _____

SAMPLE NO. _____
SAMPLE DESCRIPTION _____ COLOR _____

ATTERBERG LIMITS	PL	LL
PREP. DISH _____	RUN BY _____	
NO. OF BLOWS		
DISH NO.		
WT. OF WET SOIL & DISH		
WT. OF DRY SOIL & DISH		
WT. OF DISH		
WT. OF WATER		
WT. OF DRY SOIL		
WATER CONTENT		

LIQUID LIMIT, LL _____
PLASTIC INDEX, PI _____

-200	
RUN BY _____	
DISH NO.	
WT. OF DISH & DRY SOIL	
WT. OF DISH & WASHED SOIL	
WT. OF DISH	
WT. OF -200	
WT. OF TOTAL SOIL, DRY	

PERCENT -200 _____ %

MOISTURE CONTENT	
RUN BY _____	
DISH NO.	
WT. OF DISH & WET SOIL	
WT. OF DISH & DRY SOIL	
WT. OF DISH	
WT. OF WATER	
WT. OF DRY SOIL	

MOISTURE CONTENT _____ %

DENSITY	
RUN BY _____	
LENGTH	
DIAMETER	
VOLUME	
WT. OF WET SOIL	
WT. OF DRY SOIL	

DRY DENSITY _____ PCF

REMARKS: _____

F-17 SUMMARY OF LABORATORY TEST RESULTS

TECHNICIAN _____ PROJECT NO. _____

APPROVED BY _____ DATE _____

SAMPLE NO.	NATURAL MOISTURE CONTENT (%)	NATURAL DRY DENSITY (pcf)	GRADATION		PERCENT PASSING NO 200 SIEVE	ATTERBERG LIMITS		SOIL OR BEDROCK TYPE	COMMENTS
			GRAVEL (%)	SAND (%)		LIQUID LIMIT (%)	PLASTICITY INDEX (%)		

000239

QUALITY CONTROL PROCEDURE

FOR

PARTICLE SIZE ANALYSIS

INDEX

Page No.

1.0 EQUIPMENT AND MATERIALS 1

1.1 Equipment. 1

1.2 Materials. 1

2.0 METHODOLOGY 2

2.1 Objective. 2

2.2 Test Procedures. 2

2.3 References 2

3.0 REPORTING 3

3.1 Forms. 3

3.2 Records. 3

1.0 EQUIPMENT AND MATERIALS

1.1 Equipment

(1) Balance, accurate to 0.1g.

(2) Stirring apparatus with baffled dispersion cup.

(3) Hydrometer, 152H.

(4) Sedimentation cylinder, 1000 ml.

(5) Thermometer, accurate to $\pm 0.5^{\circ}C$.

(6) U.S. Standard Sieves: 3-inch, 2-inch, 1-1/2-inch, 1-inch, 3/4-inch, 3/8-inch, No. 4, No. 8, No. 16, No. 20, No. 30, No. 40, No. 50, No. 60, No. 100, No. 140, No. 200.

(7) Covered container.

(8) Timing device.

(9) Oven, 110 $\pm 5^{\circ}C$.

1.2 Materials

(1) Dispersing agent: 4% solution $Na(PO_3)$ ("Calgon" is not acceptable).

(2) Distilled water.

2.0 METHODOLOGY

2.1 Objective

The objective of this procedure is to quantitatively determine the distribution of particle sizes of soils, aggregates and soil-aggregate mixtures. The distribution of particle sizes larger than a No. 200 sieve are determined by screening. The distribution of particles smaller than a No. 200 sieve are determined by hydrometer analysis.

2.2 Test Procedures

Particle size analysis shall be performed in accordance with the procedures outlined in ASTM D-422-63.

2.3 References

Annual Book of ASTM Standards, ASTM Procedure D-422-63, Volume 04.08.

3.0 REPORTING

3.1 Forms

F-10 Gradation Analysis with Hydrometer Worksheet

F-11 Gradation Analysis Worksheet

F-12 Gradation Test Results

3.2 Records

Completed reports shall be maintained in the PBR Project Files.

F-10 GRADATION ANALYSIS WITH HYDROMETER

WORKSHEET

TECHNICIAN _____ PROJECT NO _____

APPROVED BY _____ DATE _____

SAMPLE NO. _____

VISUAL DESCRIPTION: _____

SAMPLE PREPERATION

RUN BY _____ SIEVING TIME _____

SIEVE SIZE		3"	1 1/2"	3/4"	3/8"	NO.4
OF PAN AND SAMPLE						
WT. OF PAN						
DRY WT. RETAINED						
DRY WT. PASSING						
% OF TOTAL PASSING						
	W% = _____					

SAMPLE WEIGHTS	WET	DRY
TOTAL SAMPLE	_____	_____
RETAINED ON NO. 4	_____	_____
PASSING NO. 4	_____	_____

SIEVE AND HYDROMETER ANALYSIS

RUN BY _____ SIEVING TIME _____

SIEVE NO.	WEIGHT RETAINED	WEIGHT PASSING	% OF TOTAL PASSING
8 (10)			
16			
30 (40)			
50			
100			
200			
PAN			—
TOTAL			—

FACTOR = $\frac{W\%}{W}$ = _____ = _____

MOISTURE DETERMINATION

	+4 MATERIAL	-4 MATERIAL	HYGRO. MOISTURE	HYDRO. SAMPLE
DISH NO.				
WT. WET SOIL AND DISH				
WT. DRY SOIL AND DISH				
WT. DISH				
WT. OF DRY SOIL		_____ = W		
% MOISTURE				

HYDROMETER ANALYSIS

RUN BY _____

CYLINDER NO. _____ SPECIFIC GRAVITY _____ DISPERSING AGENT _____

DISH NO. _____ DATE _____ AMOUNT _____ ml DATE CALIB _____

CLOCK TIME	TEST TIME	TEMP. C°	HYD. READ	HYD.* CORR	CORR READ	FACTOR X CORRECTED READING = % OF TOTAL PASSING	% OF TOTAL PASSING	PARTICLE DIAMETER	_____
	START MIX	—	—	—	—		—	—	
	STOP MIX	—	—	—	—		—	—	
	0.5 min							0.050 mm	
	1.0 min							0.037 mm	
	4.0 min							0.019 mm	
	19 min							0.009 mm	
	60 min							0.005 mm	
	7h 15 min							0.002 mm	
	25h 45 min							0.001 mm	

GRAVEL _____% SAND _____% CLAY-SILT _____%. STORAGE LOCATION _____

* CORRECTION INCLUDES TEMP., MENISCUS, AND DEFLOCULENT

HNICIAN _____ PROJECT NO. _____

F-11 GRADATION ANALYSIS WORKSHEET

PROVED BY _____ DATE _____

PLE NO.					
CRIPTION					
BY _____	RUN BY _____	RUN BY _____	RUN BY _____	RUN BY _____	RUN BY _____
H NO.					
SOIL & DISH					
SOIL & DISH					
H WT.					
SOIL WT.					

VE E		CUM. WT. RET	% PASS		CUM. WT. RET	% PASS		CUM. WT. RET	% PASS		CUM. WT. RET	% PASS		CUM. WT. RET	% PASS		CUM. WT. RET	% PASS
6																		
3																		
1/2																		
/4																		
/8																		
#4																		
#8																		
#18																		
#30																		
#60																		
100																		
200																		

VEL %					
ND %					
Y-SILT %					
MARKS:					

000276

PLACE WITH #10 & #40 SEIVE WHEN REQUESTED

F-12 GRADATION TEST RESULTS

TECHNICIAN _____ PROJECT NO. _____

APPROVED BY _____ DATE _____

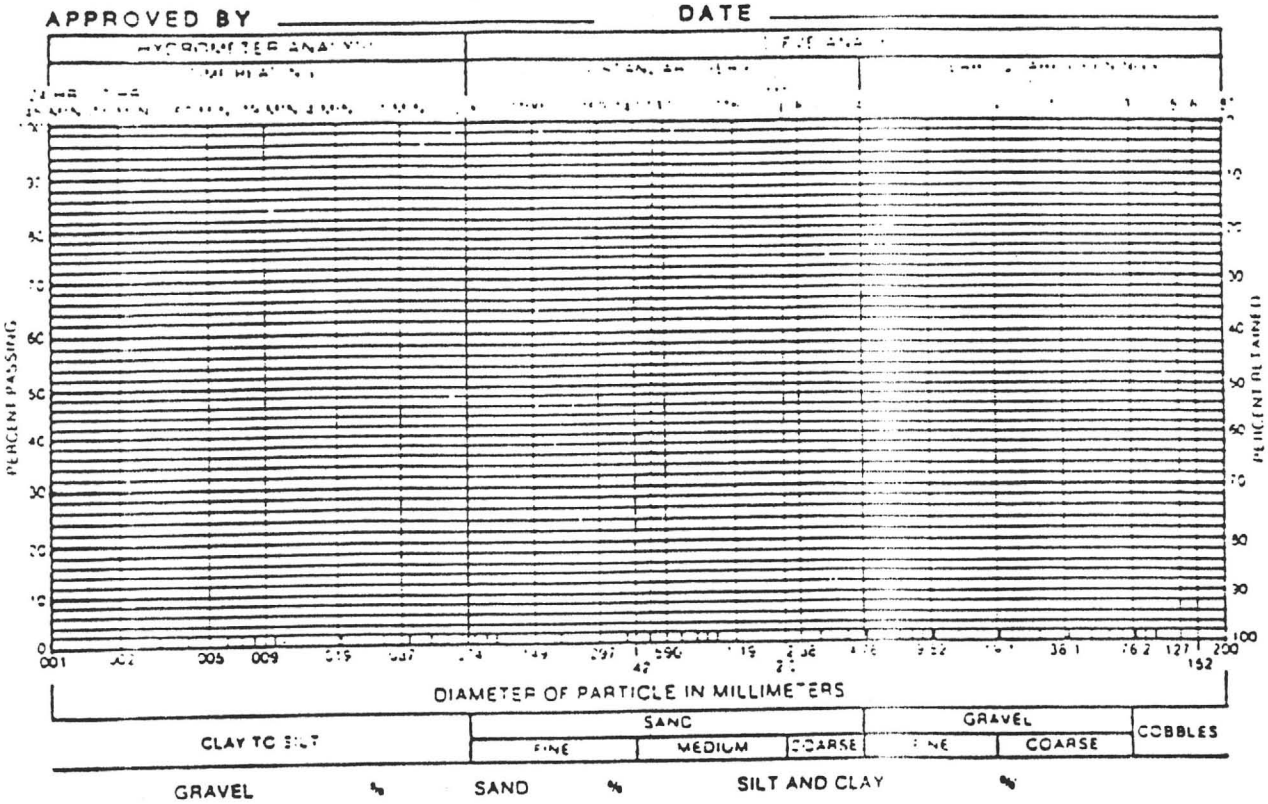

GRAVEL % SAND % SILT AND CLAY %

LIQUID LIMIT % PLASTICITY INDEX %

SAMPLE OF FROM

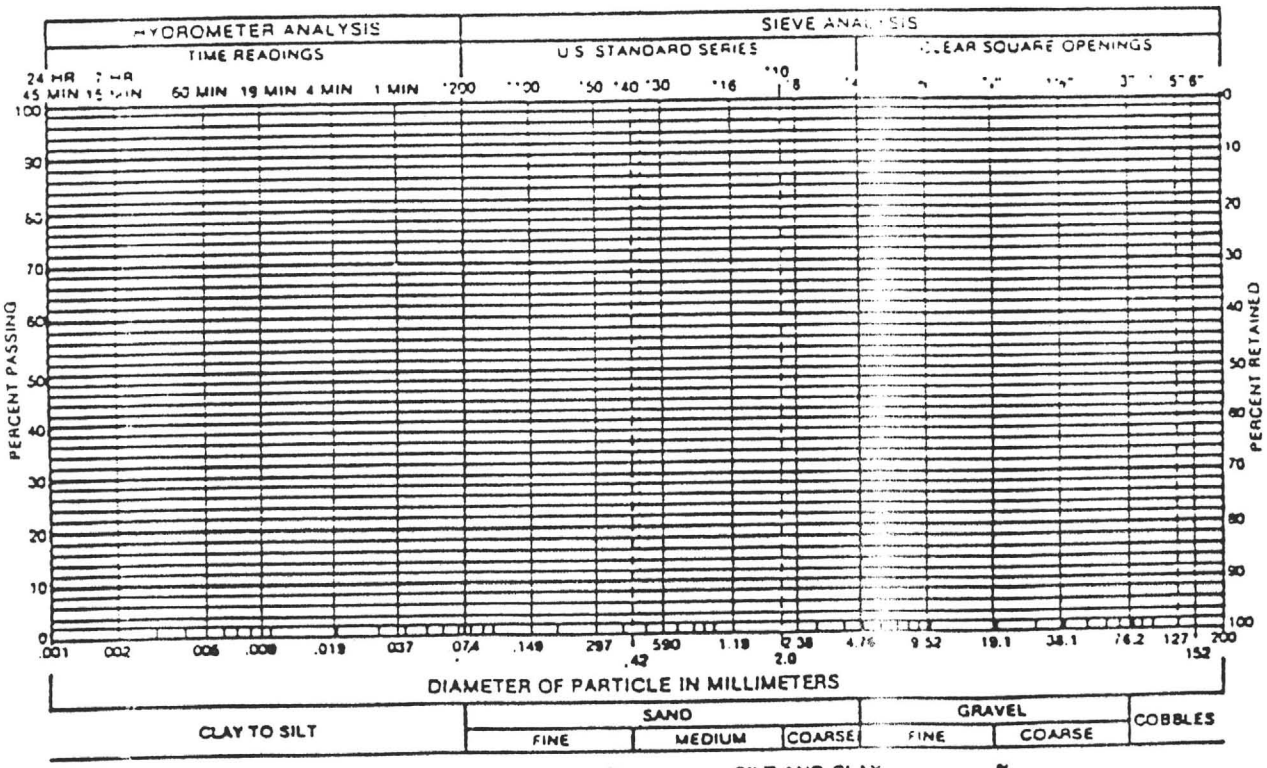

GRAVEL % SAND % SILT AND CLAY %

LIQUID LIMIT % PLASTICITY INDEX %

SAMPLE OF FROM

QUALITY CONTROL PROCEDURE

FOR

MOISTURE CONTENT OF SOILS

INDEX

Page No.

1.0 EQUIPMENT 1

2.0 METHODOLOGY 2

2.1 Objective. 2

2.2 Test Procedures. 2

2.3 References 2

3.0 REPORTING 3

3.1 Forms. 3

3.2 Records. 3

1.0 EQUIPMENT AND MATERIALS

Equipment

(1) Balance, accurate to 0.01g.

(2) Moisture containers.

(3) Oven, 100 $\pm 5^{o}C$.

2.0 METHODOLOGY

2.1 Objective

The objective of this procedure is to determine the laboratory moisture content of soils, aggregates and soil-aggregate mixtures.

2.2 Test Procedures

The tests shall be performed in accordance with the procedures outlined in ASTM D-2216-80.

2.3 References

Annual Book of ASTM Standards, ASTM Procedure D-2216-80, Volume 04.08.

3.0 REPORTING

3.1 Forms

F-6 Moisture and Density Worksheet

F-17 Summary of Laboratory Test Results

3.2 Records

Completed reports shall be maintained in the PBR Project Files.

IA

PROVED BY _____

F-6 MOISTURE & DENSITY WORKSHEET

JEC. NO. _____

DATE _____

IFICATION		TEST RESULTS				MOISTURE DETERMINATION				DENSITY DETERMINATION				
SAMPLE NO.	SAMPLE TYPE	% MOISTURE	DRY DENSITY PCF	UNIF. CLASS	DESCRIPTION	DISH NO.	WT. OF WET SOIL AND DISH	WT. OF DRY SOIL AND DISH	WT. OF DISH	SAMPLE LENGTH IN.	SAMPLE DIAMETER IN.	WT. OF WET SOIL AND TARE	WT. OF TARE	WT. OF WET SOIL

000283

F-17 SUMMARY OF LABORATORY TEST RESULTS

TECHNICIAN _____ PROJECT NO. _____

APPROVED BY _____ DATE _____

SAMPLE NO.	NATURAL MOISTURE CONTENT (%)	NATURAL DRY DENSITY (pcf)	GRADATION		PERCENT PASSING NO 200 SIEVE	ATTERBERG LIMITS		SOIL OR BEDROCK TYPE	COMMENTS
			GRAVEL (%)	SAND (%)		LIQUID LIMIT (%)	PLASTICITY INDEX (%)		

000284

QUALITY CONTROL PROCEDURE

FOR

SAMPLING OF AGGREGATES AND SOILS

INDEX

Page No.

1.0 EQUIPMENT AND MATERIALS 1

1.1 Equipment. 1

1.2 Materials. 1

2.0 SAMPLING METHODOLOGY. 2

2.1 Objectives 2

2.2 Test Procedure 2

2.3 References 2

3.0 REPORTING 3

3.1 Forms. 3

3.2 Records. 3

1.0 EQUIPMENT AND MATERIALS

1.1 Equipment

Shovels, scoops, buckets and brushes for sampling.

1.2 Materials

Plastic and cloth bags, tags and markers for samples and sample identification.

2.0 SAMPLING METHODOLOGY

2.1 Objectives

The objective is to provide standard sampling procedures for obtaining samples of soils, aggregates and soil-aggregate mixtures from stockpiles, truck loads and borrow areas.

2.2 Test Procedure

Sampling shall be done in accordance with the standardized procedures outlined in ASTM D-75-82.

2.3 References

ASTM Procedure D-75-82, Annual Book of ASTM Standards, Volume 04.08.

CONSTRUCTION ACTIVITIES REPOR

Project No. _____

Date _____

Daily Report No. _____

echnician _____

pproved By _____

THER CONDITIONS AND TEMPERATURE _____

IPMENT _____

STRUCTION ACTIVITIES _____

ERVATIONS

000289

F-4 SOIL SAMPLING LOG

SAMPLE NO. _____

PROJECT NO. _____

DATE _____

DELIVERED TO LABORATORY

SAMPLED BY _____

DATE _____

LOCATION _____

(EXAMPLE: STOCKPILE, BORROW AREA, TRUCK, FILL)

DEPTH _____

SAMPLE TYPE _____

(EXAMPLE: LARGE BULK SAMPLE, DRIVE CYLINDER, ECT.)

VISUAL CLASSIFICATION _____

INTENDED USE _____

(EXAMPLE: CLAYEY BORROW, RANDOM FILL, ETC.)

TESTING PROGRAM _____

(EXAMPLE: STANDARD COMPACTION TEST, ATTERBERG LIMITS, ETC.)

000290

Southwestern Exploration Associates

COUNTY NOTEBOOK RESEARCH SYSTEM

VOL. 1

GENERAL ARTICLES

CONSULTING SERVICES IN:

literature research
mineral exploration
geothermal exploration
geophysical exploration
multispectral aerial photography
space imagery search and retrieval
image enhancement and processing
remote sensing and interpretation
environmental studies

4500 E. Speedway, Suite 14
Tucson, Arizona 85712
(602) 795-6097

COUNTY NOTEBOOK INVENTORY LIST

Volume 1: County Summary Material

1. Mining District index map with USGS quadrangle overlay
2. County bibliography list with explanations
3. Target listing
4. Listing of all deposits with current exploration status
5. Map indexes to various commodities and a generalized land status map
6. County report by State Bureau of Mines
7. Information on industrial mineral occurrences within the county
8. General articles filed alphabetically, preceded by bibliography list
9. Metal price list

Volume 2: Thesis Material

1. Index map of available theses
2. Theses arranged alphabetically by author

Volume 3: U.S.G.S. Reduced Topographic Sheets

1. Reduced A.M.S. sheets
2. Reduced 7½ and 15 minute quad sheets with list of mines located on each quad sheet

Volume 4: U.S.G.S. Geologic, Geophysical, Geochemical and Open File Maps

1. Index to maps in Volume 4
2. Geologic maps
3. Geophysical maps
4. Geochemical maps
5. Photo index maps

Volume 5: Mining District Notebooks

1. Mining district summary sheet
2. Mint records, mineral resources material, Weed's Copper Handbook (colored sheets separate these sections)
3. Mining district articles listed alphabetically
4. Bibliography
5. Mine summary sheets with geologic data
6. Land status

VOL. 1

GENERAL ARTICLES