CONTACT INFORMATION
Mining Records Curator
Arizona Geological Survey
3550 N. Central Ave, 2nd floor
Phoenix, AZ, 85012
602-771-1601
http://www.azgs.az.gov
inquiries@azgs.az.gov

The following file is part of the Walter E. Heinrichs, Jr. Mining Collection

ACCESS STATEMENT

These digitized collections are accessible for purposes of education and research. We have indicated what we know about copyright and rights of privacy, publicity, or trademark. Due to the nature of archival collections, we are not always able to identify this information. We are eager to hear from any rights owners, so that we may obtain accurate information. Upon request, we will remove material from public view while we address a rights issue.

CONSTRAINTS STATEMENT

The Arizona Geological Survey does not claim to control all rights for all materials in its collection. These rights include, but are not limited to: copyright, privacy rights, and cultural protection rights. The User hereby assumes all responsibility for obtaining any rights to use the material in excess of "fair use."

The Survey makes no intellectual property claims to the products created by individual authors in the manuscript collections, except when the author deeded those rights to the Survey or when those authors were employed by the State of Arizona and created intellectual products as a function of their official duties. The Survey does maintain property rights to the physical and digital representations of the works.

QUALITY STATEMENT

The Arizona Geological Survey is not responsible for the accuracy of the records, information, or opinions that may be contained in the files. The Survey collects, catalogs, and archives data on mineral properties regardless of its views of the veracity or accuracy of those data.

September 3, 1970

Report Letter:

To: W.S. Bickley, Asst. Vice President, Highway Engineering,
M.M. Sundt Construction Co.
P.O. Box 2592, Tucson, Arizona.

From: Donald B. Cooley, Senior Geologist and James E. Sherman,
Geologist, Heinrichs GEOEXploration Co.
P.O. Box 5964, Tucson, Arizona.

Subject: Slope Stability Problem - Clifton Road Job
70-35, GEOEX Job #576

Dear Mr. Bickley:

On September 2, 1970 Donald B. Cooley, Senior geologist and James E. Sherman, geologist for Heinrichs GEOEXploration Co. visited the highway construction site (70-35) at the request of M.M. Sundt Construction Co., about five miles north of Clifton, Arizona for the purpose of evaluating geologic factors that may be responsible for an apparent slope stability problem.

Description of Site

The highway cut under investigation is currently undergoing excavation. The portion of the cut that was examined is about 400 feet long, 150 feet wide with an inside rockface extending upward some 80 feet and the outside slope consisting partially of rock debris descending some 200 feet below the present ground surface.

Geologic Description

The major rock type exposed in the highway cut is an agglomerate composed of subangular to rounded gravel cemented

with fines of sand, silt and clay sized volcanic particles. Some 40 percent of this agglomerate consists of decomposed pumice which has been partially altered to clay.

The agglomerate is massive with only occasional traces of stratification. A series of shear planes, striking about N55°W and dipping about 65°NE, are present throughout the vertical exposure of the rock unit. These parallel planes of shear are spaced some fifty feet apart and show movement along polished slickenslide surfaces. Other minor fracture planes striking in the northeast direction also occur in the agglomerate.

In the cut, the section of agglomerate was examined between stations 371 + 00 and 374 + 76. Some 75 feet below the present ground elevation of the cut the agglomerate is stratified with beds striking approximately east-west and dipping about 20° south.

At about station 374 + 76 in the cut a fault zone striking approximately N21°W and dipping 60° SW shows a gouge zone some 15 feet thick. This gouge material consists of highly fractured agglomerate, andesite and clay minerals. To the northeast and adjacent to the fault zone is a massive formation of andesite porphyry. This rock unit appears uniformly dense with only a small amount of jointing.

At the present level of the excavation the agglomerate appears partially saturated with water indicating that the "watertable" as it exists in the fractures and fault zone may be relatively close to the present excavation surface.

Conclusions

The major conditions contributing to the instability of the slope appear to be controlled by the fault plane dipping southwest and intersecting one or more northeast dipping shear planes in the agglomerate. This produces an intersection of these planes of weakness striking about N35°W and plunging about 25° NW.

In addition to these intersecting planes of weakness the south dipping bedding planes in the lower portion of the agglomerate intersect the fault and shear planes creating additional instability to the agglomerate blocks. This series of intersecting planes is very probably causing several blocks of agglomerate to be unstable.

The fault gouge zone, shear planes and bedding planes along which displacement may occur are very probably coated with clay minerals that have a low coefficient of friction in comparison with fresh unaltered rock surfaces. In addition to this condition, the proximity of a "watertable" to the present excavation surface suggests that the fault gouge zone and shear planes may be saturated at depths near the final grade line and would contribute additional instability to the slope. Rainfall runoff along the gouge zone could saturate a normally dry fault, increase the unit weight of the agglomerate mass and provide a hydrostatic head of water on the already "unstable" blocks resulting in failure of the subgrade bedrock.

It is possible, however, that after excavation is completed and the final grade line is established that the unstable rock may have been removed from the cut.

Recommendations

The first information that should be established is factual data confirming the belief that the slope is unstable. This data can be obtained by measuring the rate of continual movement and its location. If the slope has already failed and movement has taken place additional creep of the unstable material particularly after blasting will probably occur. A series of triangulation stations located across the unstable rock zone would allow for daily measurements of the rate of movement. These measurements should be made during excavation and for some time after the final grade has been obtained.

During excavation a daily series of photographs should be made of the rock mass and fractures suspected of failing.

A series of 4 to 6 core drill holes oriented in a line at right angles to the direction of movement and extending into the andesite below would give necessary information about the degree of fracturing in the agglomerate. This data would be necessary for evaluating the stability of the final subgrade.

A drainage diversion consisting of some method of reducing additional rainfall infiltration into the fault zone will improve stability factors and may provide sufficient stability to the final subgrade.

After final grade is obtained, supporting fill on the toe of a potential rock slide may also provide stability.

Before and at the time that final grade is established additional mapping of rock structure will be necessary to provide data used in evaluating the stability of the rock. It may also be helpful to reconstruct one or more cross sections of the cut and compare these data with original cross sections. This information may give an estimate of how much rock displacement occurred subsequent to the beginning of construction.

If you have any questions, please contact us at once.

Respectfully submitted,
HEINRICHS GEOEXPLORATION COMPANY

James E. Sherman

James E. Sherman
Geologist

REGISTERED GEOLOGIST
CERTIFICATE NO.
7482
DONALD B.
COOLEY
DATE SIGNED
Arizona U.S.A.

By: Donald B. Cooley
Senior Geologist

Box 5964
Tucson, Arizona 85703
3 September 1970

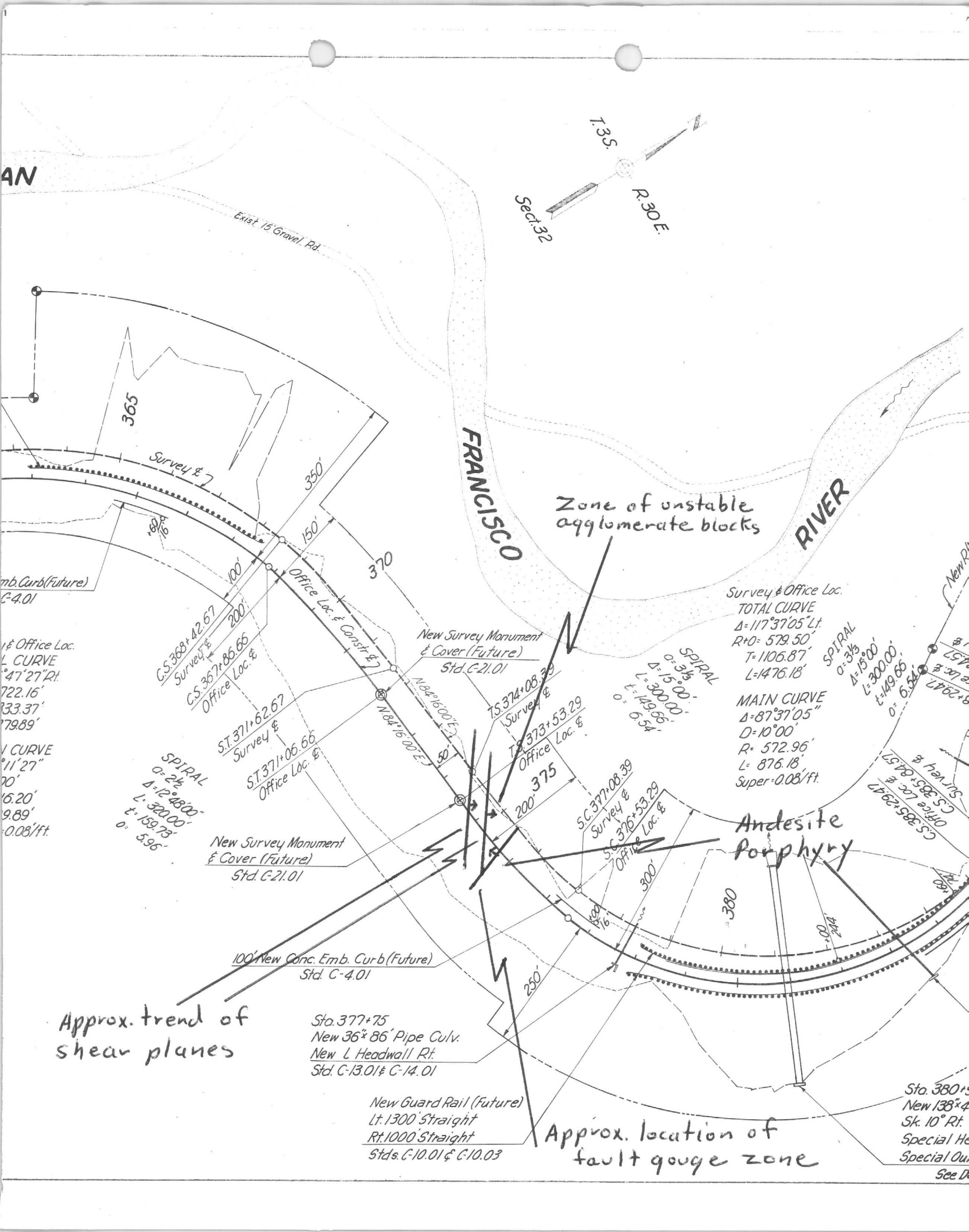
AN
T.3S.
R.30E.
Sect.32
Exist. 15' Gravel Rd.
FRANCISCO
RIVER
Zone of unstable agglomerate blocks
365
Survey ℄
350'
150'
370
100'
200'
Office Loc. & Const. ℄
C.S.368+42.67
Survey ℄
C.S.367+86.66
Office Loc. ℄
S.T.371+62.67
Survey ℄
S.T.371+06.66
Office Loc. ℄
N84°16'00"E
N84°16'00"E
50
New Survey Monument & Cover (Future) Std. C-21.01
T.S.374+08.39
Survey ℄
T.S.373+53.29
Office Loc. ℄
375
200'
S.C.377+08.39
Survey ℄
S.C.376+53.29
Office Loc. ℄
300'
380
250'
Andesite Porphyry
Survey & Office Loc.
TOTAL CURVE
Δ=117°37'05" Lt.
R+O= 579.50'
T=1106.87'
L=1476.18'
MAIN CURVE
Δ=87°37'05"
D=10°00'
R= 572.96'
L= 876.18'
Super=0.08'/ft.
SPIRAL
O=3⅓
Δ=15°00'
L=300.00'
t=149.66'
O=6.54'
SPIRAL
O=2½
Δ=12°48'00"
L=300.00'
t=159.73'
O=5.96'
New Survey Monument & Cover (Future) Std. C-21.01
100' New Conc. Emb. Curb (Future) Std. C-4.01
Approx. trend of shear planes
Sta. 377+75
New 36"x 86' Pipe Culv.
New L Headwall Rt.
Std. C-13.01 & C-14.01
New Guard Rail (Future)
Lt. 1300' Straight
Rt. 1000' Straight
Stds. C-10.01 & C-10.03
Approx. location of fault gouge zone
Sta. 380+
New 138"x4
Sk. 10° Rt.
Special He
Special Ou
See D

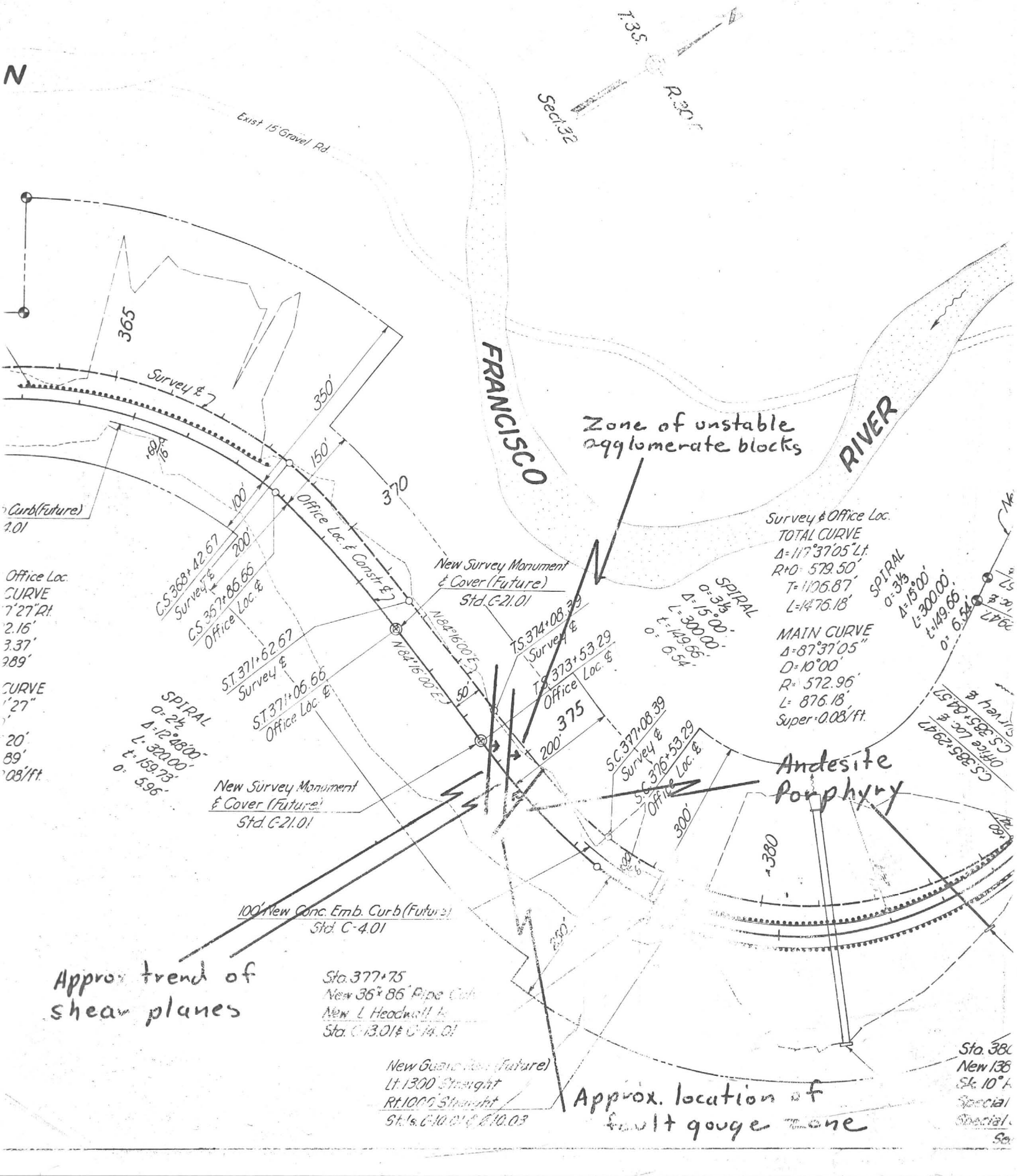

N
T.3S.
R.30
Sect.32
Exist 15' Gravel Rd.
365
Survey ℄
350'
150'
370
100'
200'
Office Loc. & Constr ℄
FRANCISCO
RIVER
Zone of unstable agglomerate blocks
Curb (Future)
4.01
Office Loc.
CURVE
7'27" Rt.
2.16'
3.37'
989'
CURVE
'27"
20'
89'
08'/ft.
C.S. 368+42.67
Survey ℄
C.S. 367+86.66
Office Loc. ℄
S.T. 371+62.67
Survey ℄
S.T. 371+06.66
Office Loc. ℄
New Survey Monument & Cover (Future)
Std. C-21.01
N 84°16'00" E
T.S. 374+08.39
Survey ℄
T.S. 373+53.29
Office Loc. ℄
50'
375
200'
SPIRAL
a=2½
Δ=12°48'00"
L=320.00'
t=159.73'
o=5.96'
New Survey Monument & Cover (Future)
Std. C-21.01
S.C. 377+08.39
Survey ℄
S.C. 376+53.29
Office Loc. ℄
300'
Survey & Office Loc.
TOTAL CURVE
Δ=117°37'05" Lt.
R+O=579.50'
T=1106.87'
L=1476.18'
SPIRAL
a=3⅓
Δ=15°00'
L=300.00'
t=149.66'
o=6.54'
MAIN CURVE
Δ=87°37'05"
D=10°00'
R=572.96'
L=876.18'
Super=0.08'/ft.
SPIRAL
a=3⅓
Δ=15°00'
L=300.00'
t=149.66'
o=6.54'
C.S. 385+29.47
Office Loc. ℄
C.S. 385+84.57
Survey ℄
Andesite Porphyry
380
100' New Conc. Emb. Curb (Future)
Std. C-4.01
200'
Approx. trend of shear planes
Sta. 377+75
New 36"x86' Pipe Culv.
New L Headwall
Sta. C-13.01 & C-14.01
New Guard Rail (Future)
Lt. 1300' Straight
Rt. 1000' Straight
Stds. C-10.01 & C-10.03
Approx. location of fault gouge zone
Sta. 380
New 138
Sk. 10°
Special
Special

N
Scale
1" = 400'
E9200
E9400
E9600
E9800
E10000
E10200
E10400
E10600
E10800
E11000
E11200
E11400
E11600
N4600
N4400
N4200
N4000
N3800
N3600
E12600
E12800
E13000
N3400
N3200
N3000
N2800
N2600
N2400
AREA "B"
FILL FOR NEW ROAD
FILL
SEE DWG H-4828
E11800
E12000
E12200
E12400

1239

N
Scale 1" = 400'
E9200
E9400
E9600
E9800
E10,000
E10,200
E10,400
E10,600
E10,800
E11,000
E11,200
E11,400
E11,600
E11,800
E12,000
E12,200
E12,400
E12,600
E12,800
E13,000
N4400
N4200
N4000
N3800
N3600
N3400
N3200
N3000
N2800
N2600
N2400
AREA "B"
FOR NEW ROAD
FILL
CUT
SEE DPS H-1828
FILL
4239

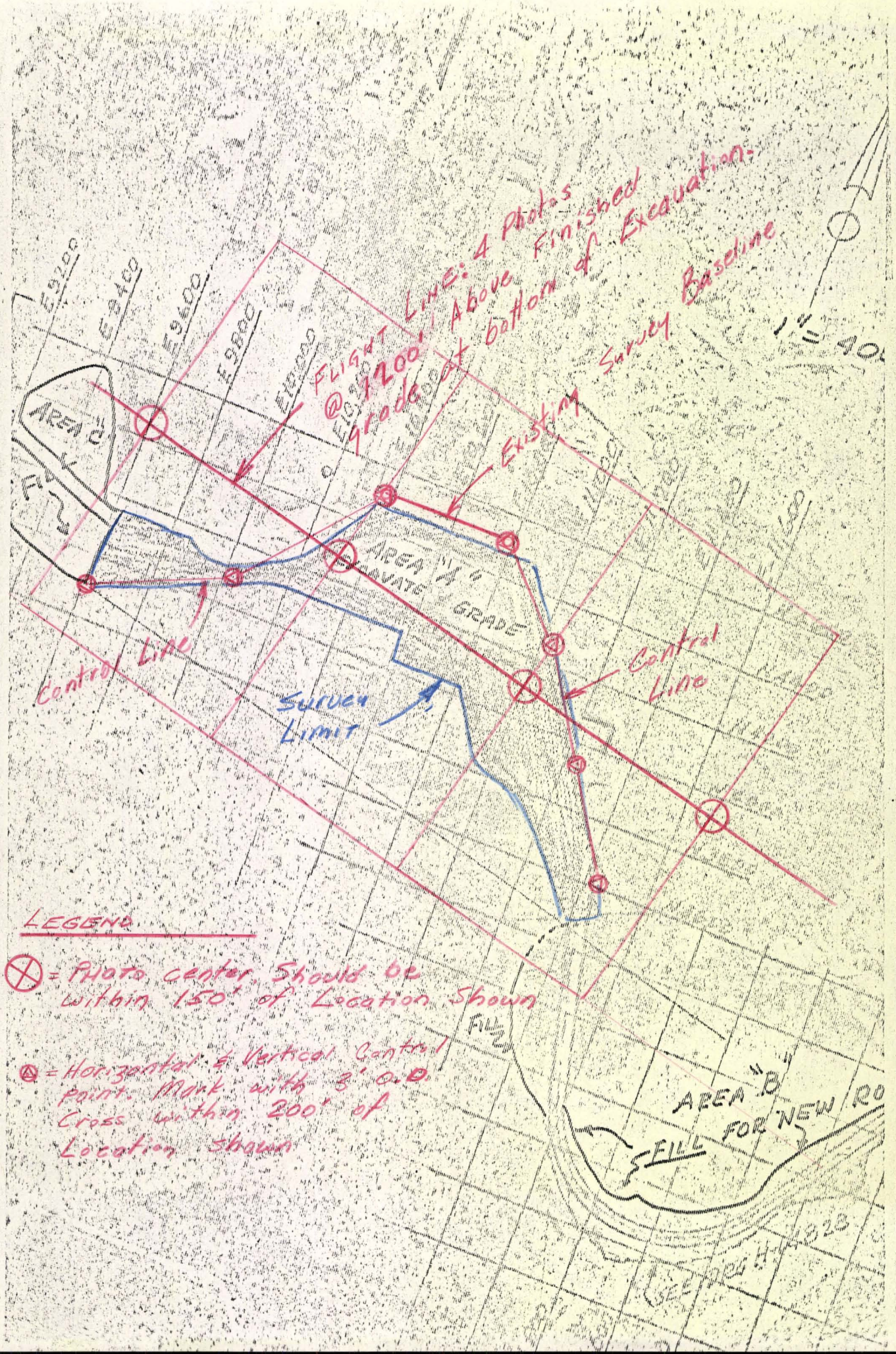

Flight Line: 4 Photos @ 1200' Above Finished grade at bottom of Excavation.
Existing Survey Baseline
Control Line
Survey Limit
Control Line
AREA "A"
EXCAVATE GRADE
AREA "B"
FILL FOR NEW RO
FILL
LEGEND
= Photo center. Should be within 150' of Location Shown
= Horizontal & Vertical Control Point. Mark with 3' O.D. Cross within 200' of Location Shown

B.P.R. REGION	STATE	PROJECT NO.	SHEET NO.	TOTAL SHEETS	AS BUILT
7	ARIZ.	S-218(14)	1	14	

W.S.E.-6-22-67

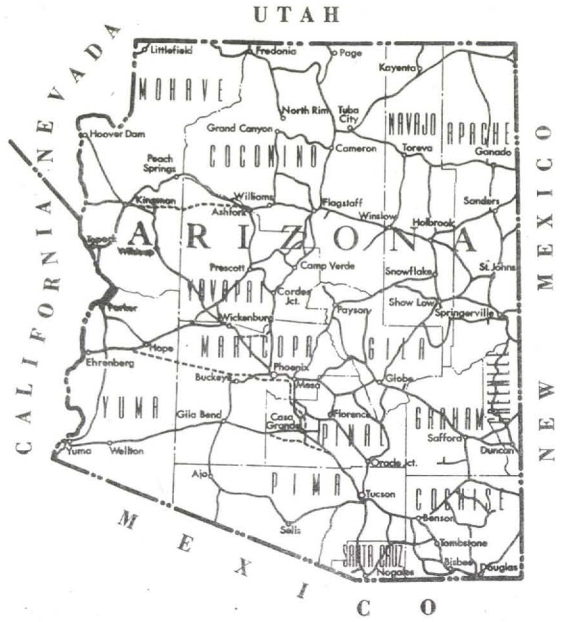

STATE OF ARIZONA
STATE HIGHWAY DEPARTMENT

PLAN AND PROFILE OF PROPOSED

STATE HIGHWAY

SAFFORD — SPRINGERVILLE

GREENLEE COUNTY

RF-051-2(1)

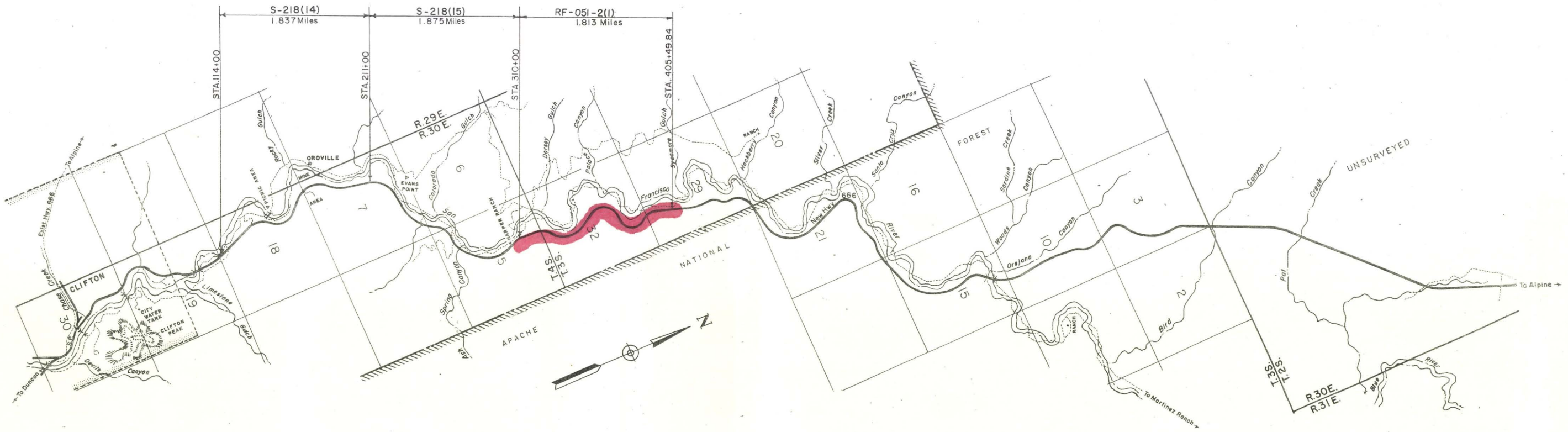

REDUCED SIZE
DO NOT SCALE

SCALE: 2" = 1 Mile

ARIZONA STATE HIGHWAY COMMISSION
APPROVED. WM. N. PRICE
STATE HIGHWAY ENGINEER.

APPROVED DATE

DEPUTY STATE ENGINEER

APPROVED DATE

ASSISTANT STATE ENGINEER

U.S. DEPARTMENT OF TRANSPORTATION
FEDERAL HIGHWAY ADMINISTRATION
BUREAU OF PUBLIC ROADS

APPROVED DATE

DIVISION ENGINEER.

APPROVED DATE

ASSISTANT ENGINEER

(Sheet 1 of 2)

SAFFORD - SPRINGERVILLE HWY.
DORSEY GULCH-SYCAMORE GULCH
GREENLEE COUNTY

B.P.R. REGION	STATE	PROJECT NO.	SHEET NO.	TOTAL SHEETS	AS BUILT
7	ARIZ.	RF-051-2(1)	2	14	

DESIGN DATA
1966 A.D.T. = 130
1986 A.D.T. = 600
Min. Design Speed 45 M.P.H.

LENGTH OF PROJECT
Sta. 310+00 to Sta. 347+30.92 Bk. = 3,730.92'
Sta. 347+09.33 Ahd. to Sta. 405+49.84 = 5,840.51'
Total = 9,571.43'
Net and Gross Length = 1.813 Miles
Mile Post to Mile Post

TYPICAL SECTION

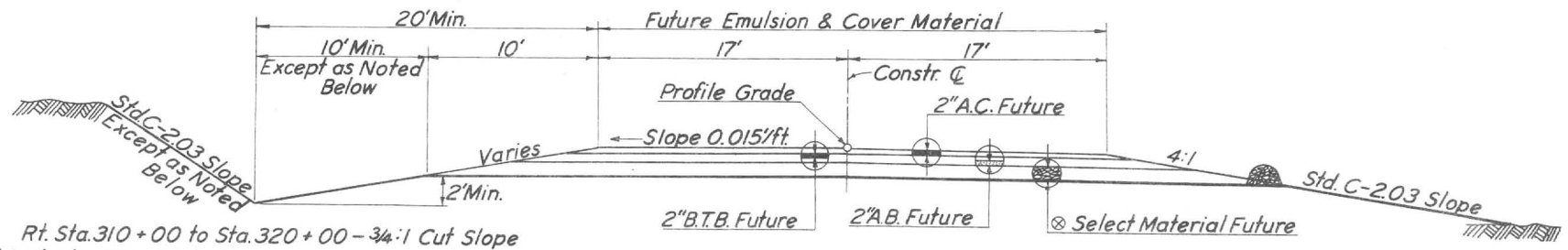

Rt. Sta. 310+00 to Sta. 320+00 – 3/4:1 Cut Slope
Lt. & Rt. Sta. 320+00 to Sta. 345+00 – 1/2:1 Cut Slope
Rt. Sta. 328+00 to Sta. 345+00 – 20' Cut Ditch
Lt. & Rt. Sta. 360+00 to Sta. 387+00 – 1/2:1 Cut Slope
Rt. Sta. 361+00 to Sta. 379+00 – 20' Cut Ditch
Rt. Sta. 387+00 to Sta. 395+00 – 1/2:1 Cut Slope
Lt. & Rt. Sta. 395+00 to Sta. 406+00 – 3/4:1 Cut Slope

NOTE: This project RF-051-2(1) is to be GRADE AND DRAIN ONLY
All work above subgrade is to be future construction.

INDEX OF SHEETS

SHEET NO.	SHEET TYPE
1	Face Sheet
2	Summary Sheet
3-5	Special Details
6	Structure Summary Sheet
7-14	Plan and Profile

⊗ SELECT MATERIAL THICKNESS

Station	to Station	Inches
310+00	320+00	12"
320+00	344+00	9"
344+00	361+00	18"
361+00	406+00	12"

NEW PIPE CULVERT

Station	Size	Length	C.M.P. Gauge 2 2/3 x 1/2	C.M.P. Gauge 3 x 1	R.C.P. Placement	R.C.P. Class	Remarks
316+54	36"	236'	16	–	Type 1	IV	15° Sk. Rt. Str. Hdwl. Rt. Std. C-14.01
319+05	36"	196'	16	–	Type 1	IV	21° Sk. Lt. Str. Hdwl. Rt. Std. C-14.01
331+20	2-60"	96'	12	–	Type 1	I	45° Sk. Lt. Spec. Hdwl. Rt.
342+10	42"	200'	14	–	Type 3	III	22° Sk. Rt. Str. Hdwl. Rt. Std. C-14.01
344+90	36"	246'	12	–	Type 3	III	Str. Hdwl. Rt. Std. C-14.01
346+70	54"	168'	14	–	Type 1	IV	Spec. Hdwl. Rt.
359+98	2-48"	194'	–	8	Type 3	IV	Str. Hdwl. Rt. Std. C-14.01
377+75	36"	86'	16	–	Type 2	IV	"L" Hdwl. Rt. Std. C-14.01
383+25	36"	310'	–	10	Type 3	IV	15° Sk. Lt. Str. Hdwl. Rt. Std. C-14.01
386+92	42"	240'	–	12	Type 3	IV	Str. Hdwl. Rt. Std. C-14.01
394+60	42"	368'	–	12	Type 3	IV	10° Sk. Rt. Str. Hdwl. Rt. Std. C-14.01
400+00	36"	120'	16	–	Type 1	IV	Str. Hdwl. Rt. Std. C-14.01
403+12	2-36"	312'	–	10	Type 3	IV	10° Sk. Rt. Str. Hdwl. Rt. Std. C-14.01

C.M.P. DOWNDRAIN (FUTURE)
Std. C-4.02

Station	Inlet	Length	Elbow	Anchor Stakes	Outlet
Rt. 310+50	Sgl.	22'	2-30°	6	–
Rt. 314+00	Sgl.	38'	2-30°	10	–
Lt. 314+20	Sgl.	176'	2-30°	38	–
Lt. 317+00	Sgl.	142'	2-30°	30	–
Rt. 317+50	Sgl.	22'	2-30°	6	–
Rt. 325+70	Sgl.	28'	2-30°	8	–
Lt. 340+90	Sgl.	24'	2-30°	6	–
Lt. 343+75	Sgl.	128'	2-30°	28	–
Rt. 346+85	Sgl.	26'	2-30°	6	–
Lt. 347+00	Sgl.	118'	2-30°	26	–
Lt. 349+50	Sgl.	162'	2-30°	34	–
Rt. 350+00	Sgl.	24'	2-30°	6	–
Rt. 358+90	Sgl.	24'	2-30°	6	–
Rt. 365+60	Sgl.	16'	2-30°	6	–
Lt. 377+00	Sgl.	16'	2-30°	6	–
Lt. 382+00	Sgl.	244'	2-30°	50	–
Lt. 384+60	Sgl.	74'	2-30°	16	–
Lt. 387+50	Dbl.	184'	2-30°	38	–
Rt. 393+60	Sgl.	24'	2-30°	6	–
Lt. 398+00	Sgl.	22'	2-30°	6	–
Rt. 399+75	Sgl.	16'	2-30°	6	–
Lt. 401+50	Sgl.	26'	2-30°	6	–
Rt. 402+30	Sgl.	18'	2-30°	6	–

DELINEATORS (FUTURE)
Std. C-9 Series
296 - Type M8-1

GUARD RAIL (FUTURE)
Std. C-10 Series
8,575 Lin. Ft.

LINE FENCE
Std. C-12.01
505 Lin. Ft., 5-Wire Fence

ROADWAY CONSTRUCTION STANDARDS 1969

C-1.01	C-6.01	C-13.02	C-13.11
C-2.03	C-12.01	C-13.03	C-14.01
C-3.01	C-13.01	C-13.06	C-21.01
			C-21.02

NEW STRUCTURAL PLATE PIPE

Station	Size	Length	Remarks
311+47	60"	238'	10 Gauge 4 bolts per ft. Spec. Hdwl. Rt.
326+45	156"	322'	Paved Invert Spec. Hdwl. Rt. See Special Detail 10° Sk. Lt.
380+93	138"	402'	Paved Invert Spec. Hdwl. Rt. Spec. Outlet Str. Lt. See Special Details 10° Sk. Rt.

SURVEY MONUMENT AND COVER (FUTURE)
2 ea. Std. C-21.01

RIGHT OF WAY MARKERS
39 ea. Std. C-21.01

EMBANKMENT CURB (FUTURE)
Std. C-4.01
6150 Lin. Ft. Curb

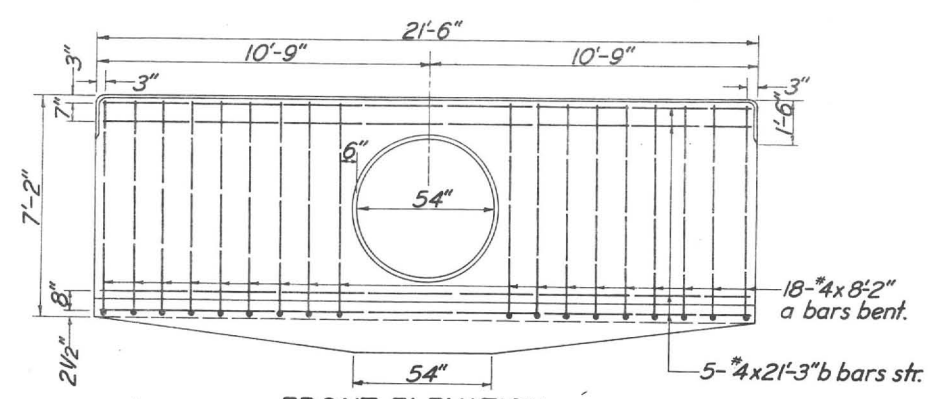

FRONT ELEVATION

QUANTITIES
STRAIGHT HEADWALL
Rt. Sta. 346+70
4.70 C.Y. A Conc.-C.M.P.
4.60 C.Y. A Conc.-R.C.P.
170 Lbs. Reinf. Steel

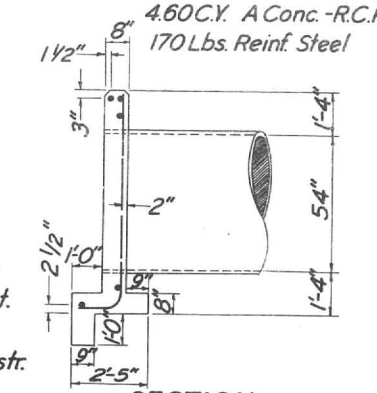

SECTION

DETAIL OF SPECIAL STRAIGHT HEADWALL
Rt. Sta. 346+70

REDUCED SIZE DO NOT SCALE

GENERAL NOTES
Right of way encroachments shall be removed by order of the State unless otherwise noted.

All right of way provisions shall be complied with before job acceptance.

Striping of finished roadway shall be for standard 2-lane, 2-way operation. (Future)

Bench markers will be furnished by the State and placed by the Contractor. Std. C-21.02.

Right of way markers shall be furnished and placed by the Contractor as directed by the Engineer. Std. C-21.01.

Mile post markers will be furnished by the State and placed by the Engineer.

Changes in location or length of spillway installations may be made by the Engineer to improve drainage conditions. (Future)

Finished Plans - Safford Office - B.B. 1/69 Rev. CF-669

SAFFORD-SPRINGERVILLE HWY.
DORSEY GULCH-SYCAMORE GULCH
GREENLEE COUNTY

B.P.R. REGION	STATE	PROJECT NO.	SHEET NO.	TOTAL SHEETS	AS BUILT
7	ARIZ	RF-051-2 (1)	3	14	

Single Straight Headwall Rt. Sta. 311+47, 326+45 & 380+93

Station	D	A	B	C	E	F	G	H	I	J	K	L	M	α	C.Y. A Conc. C.M.P.	C.Y. A Conc. R.C.P.	REINF. LBS.	HOOK BOLTS
Rt. 311+47	60"	8'-11"	15'-0"	10"	8"	2½"	3½"	6'-8"	1'-7"	1'-11"	1'-0"	1'-3"	4'-6"	79°36'	6.28		565	11
Rt. 326+45	156"	17'-11"	39'-0"	1'-7"	1'-2½"	6½"	8"	13'-3"	3'-4"	5'-0"	1'-8"	1'-8"	10'-0"	82°34'	52.80		6920	28
Rt. 380+93	138"	16'-2"	34'-6"	1'-5"	1'-1¾"	5¾"	8"	13'-8"	2'-10"	4'-3"	1'-5"	1'-6"	8'-6"	83°58'	36.37		4710	25

Steel List Single & Double Straight Headwalls Rt. Sta. 311+47, 326+45, 331+20 & 380+93

Station	Culvert	x Bars No.	x Bars Size	x Bars Length	x Bars Spacing	x, Bars No.	x, Bars Size	x, Bars Length	x, Bars Spacing	y Bars No.	y Bars Size	y Bars Length	y Bars Spacing	z Bars No.	z Bars Size	z Bars Length	z Bars Spacing
Rt. 311+47	60"	12	#5	5'-3"	10"					14	#5	2'-9"	12"	14	#5	3'-3"	12"
Rt. 326+45	156"	76	#7	6'-0"	5"	62	#9	9'-1"	5"	77	#7	5'-3"	6½"	78	#7	7'-0"	6"
Rt. 331+20	2-60"	14	#5	4'-9"	12"					24	#5	2'-6"	12"	24	#5	2'-9"	12"
Rt. 380+93	138"	66	#6	5'-8"	5"	56	#8	9'-1"	5"	68	#6	4'-6"	6½"	69	#6	6'-0"	6"

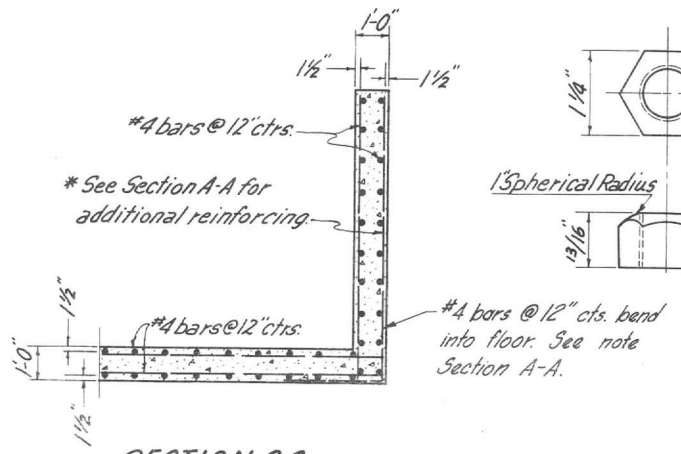

SECTION C-C

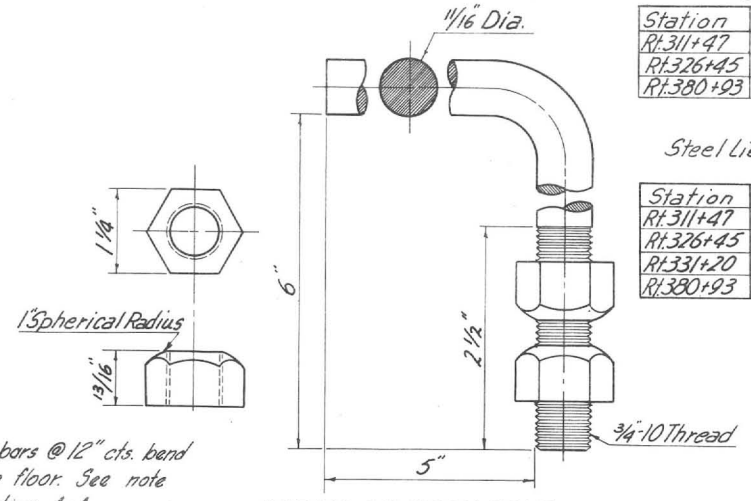

DETAIL OF HOOK BOLT

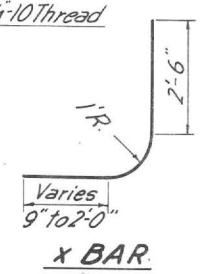

x BAR

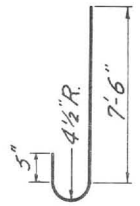

x, BAR

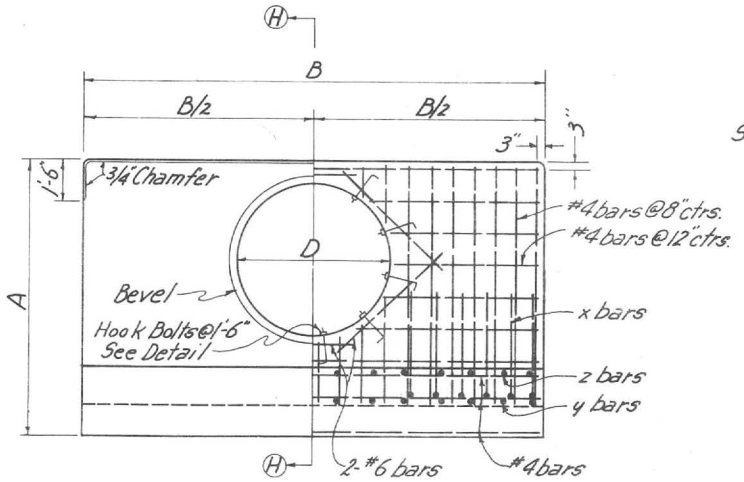

FRONT ELEVATION

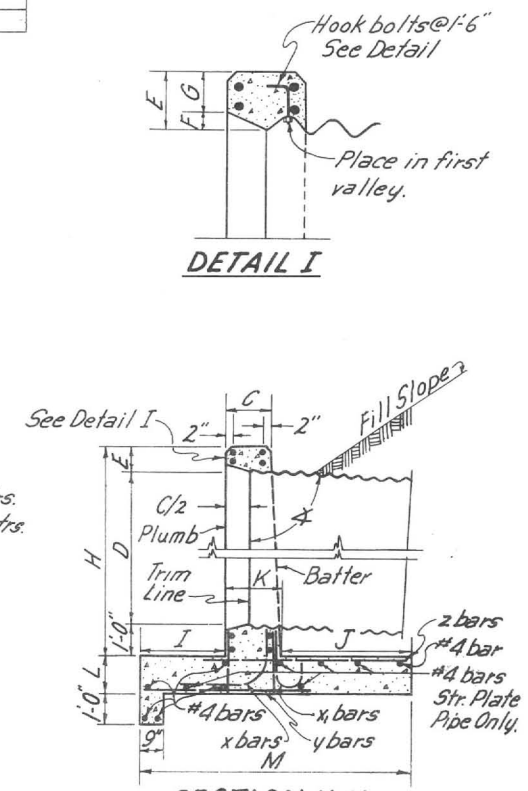

DETAIL I

SECTION H-H

DETAIL OF SPECIAL SINGLE STRAIGHT HEADWALL
Rt. Sta. 311+47, 326+45 & 380+93

Outlet Structure
Lt. Sta. 380+93

QUANTITIES
38.34 C.Y. A Conc.
3,050 # Reinf. Steel
24 Hook Bolts

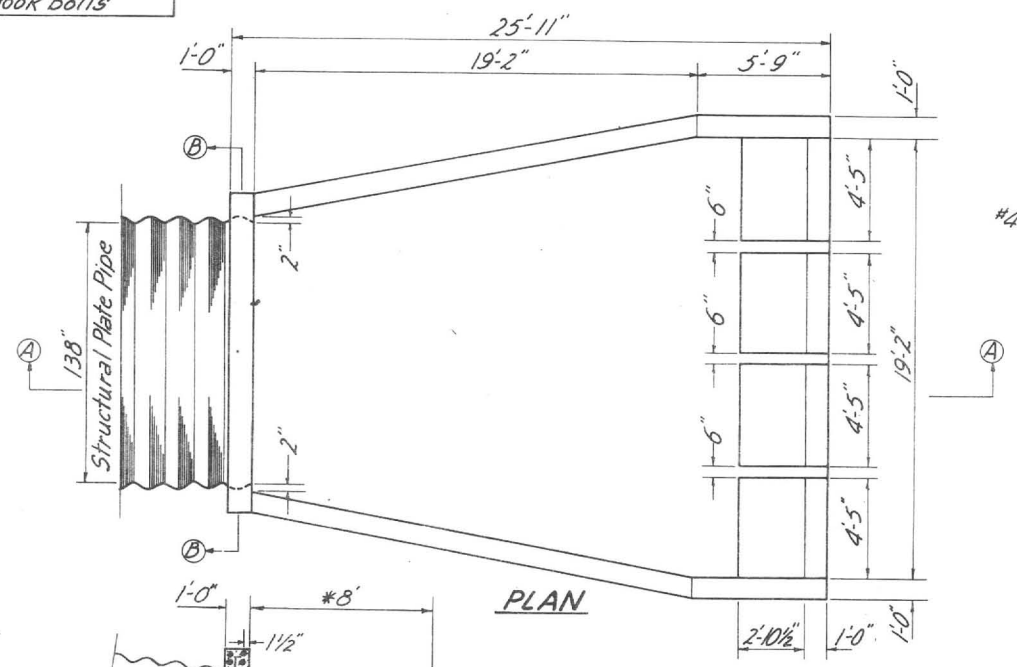

PLAN

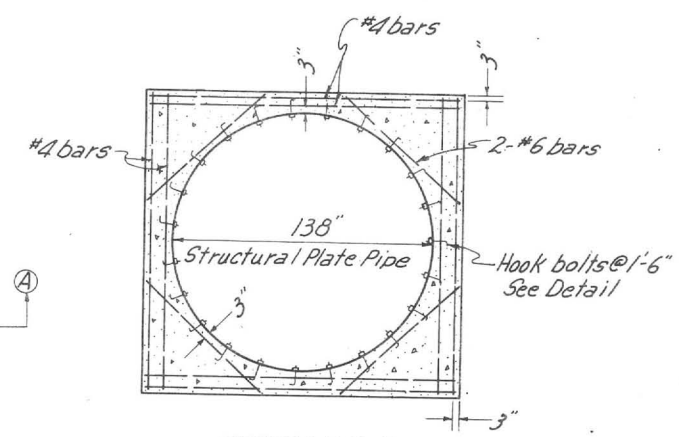

SECTION B-B

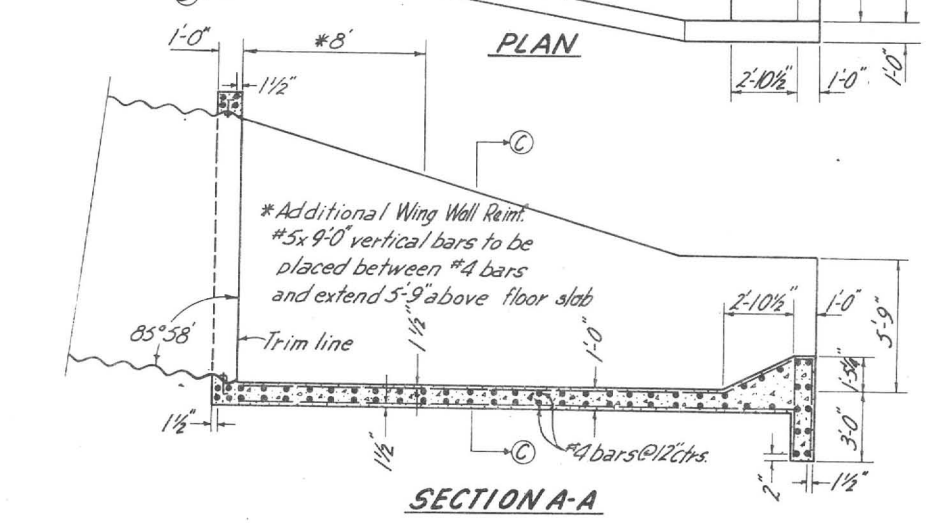

SECTION A-A

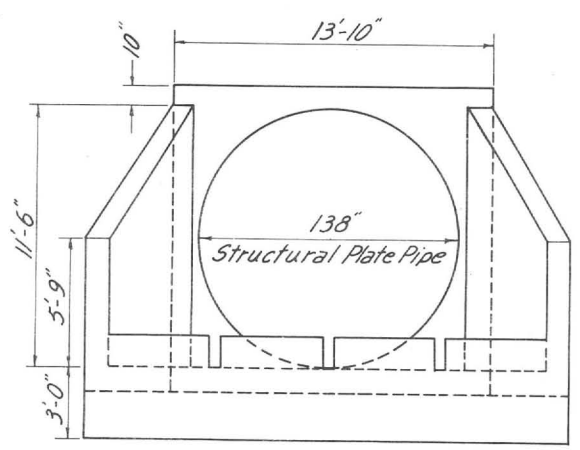

FRONT ELEVATION

Note: All exposed edges to be chamfered ¾".

DETAIL OF SPECIAL OUTLET STRUCTURE
Lt. Sta. 380+93

Double Straight Headwall
Rt. Sta. 331+20

QUANTITIES
8.29 C.Y. A Conc. C.M.P.
8.00 C.Y. A Conc. R.C.P.
875 # Reinf. Steel
22 Hook Bolts

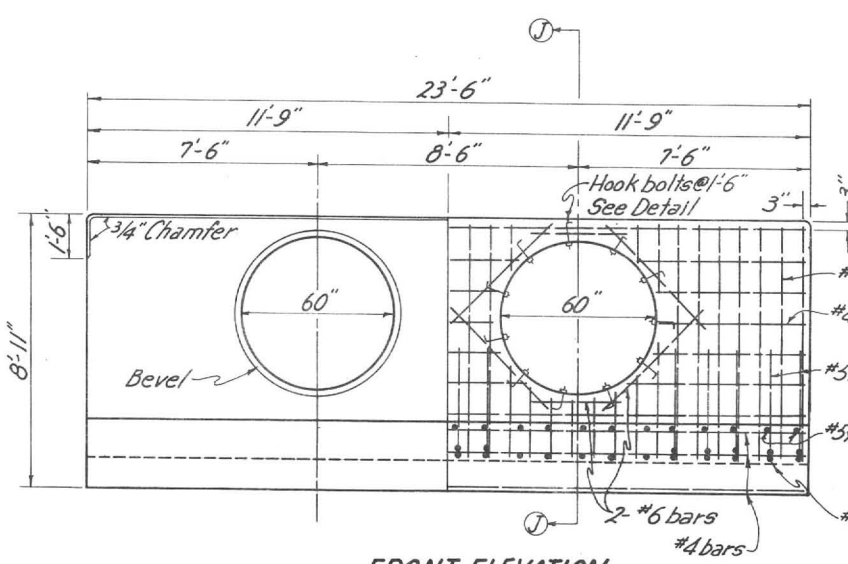

FRONT ELEVATION

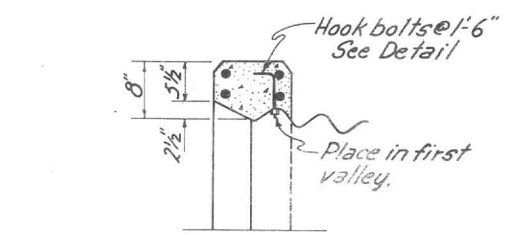

DETAIL K

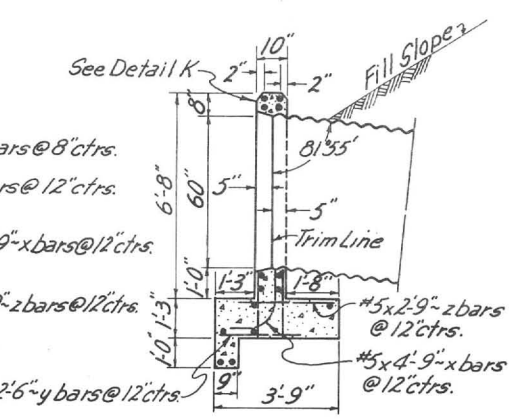

SECTION J-J

REDUCED SIZE DO NOT SCALE

DETAIL OF SPECIAL DOUBLE STRAIGHT HEADWALL
Rt. Sta. 331+20

Finished Plans - Safford Office - FS - AB - CF - G.K. 1/69

Rev. C.E. 6/69

SAFFORD-SPRINGERVILLE HWY.
DORSEY GULCH-SYCAMORE GULCH
GREENLEE COUNTY

B.P.R. REGION	STATE	PROJECT NO.	SHEET NO.	TOTAL SHEETS	AS BUILT
7	ARIZ.	RF-051-2(1)	4	14	

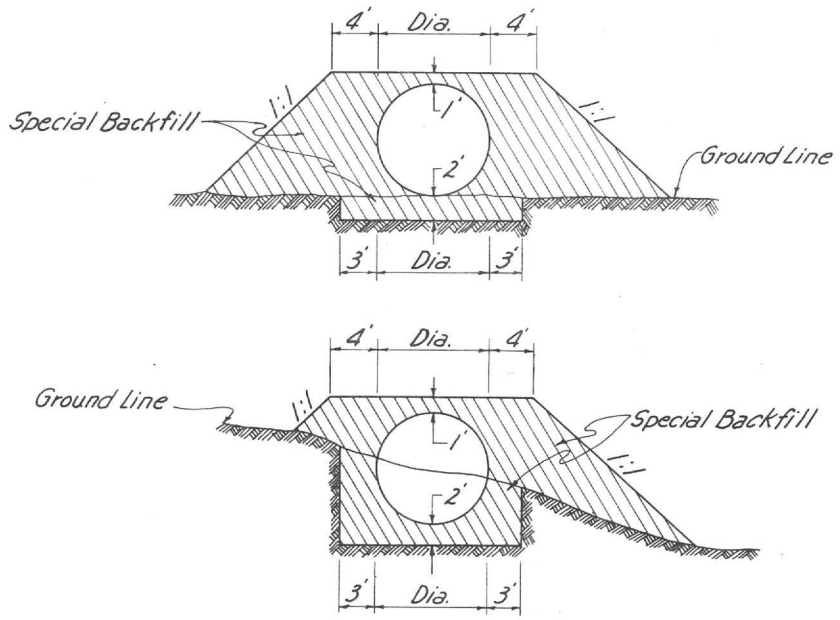

DETAIL OF SPECIAL BACKFILL
Sta. 326+45 & 380+93

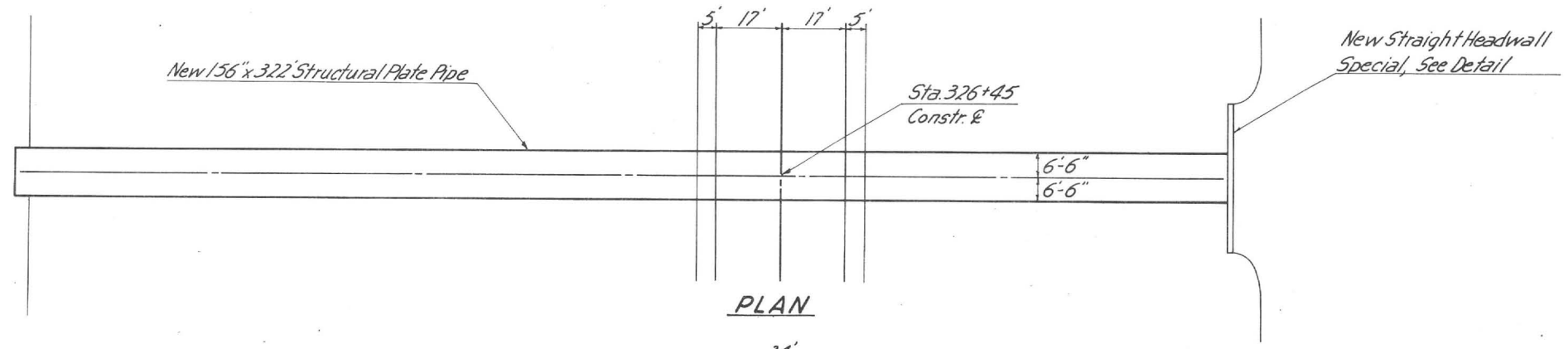

PLAN

DETAIL OF PAVED INVERT
Sta. 326+45 & 380+93

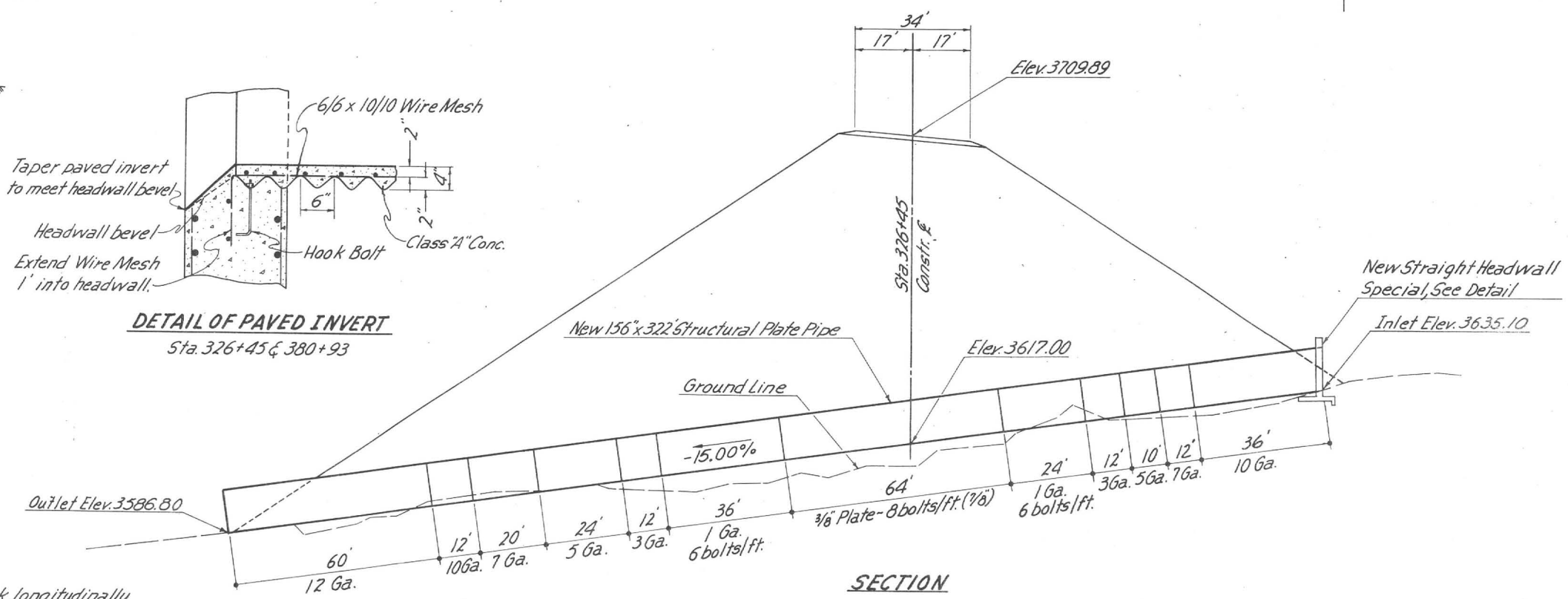

SECTION

DETAIL OF STRUCTURAL PLATE PIPE
Sta. 326+45

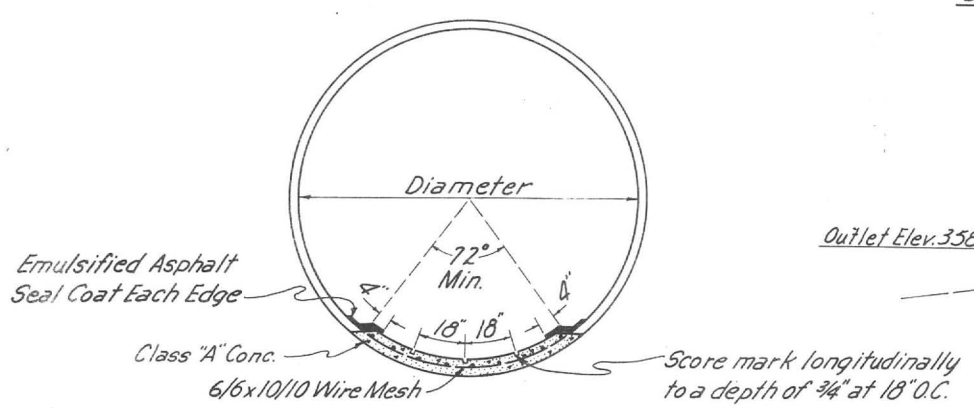

DETAIL OF PAVED INVERT
Sta. 326+45 & 380+93

NOTE:
1. Pipe shall be 9% factory elongated (Strutting will not be required.)
2. Longitudinal seam bolt spacing shall be 4 bolts per foot unless otherwise noted.
3. Heavy earth moving equipment will not be permitted over pipe until compacted fill has reached a minimum height of 4' over top of pipe.

REDUCED SIZE
DO NOT SCALE

Finished Plans - Safford Office - F.S.-B.B.-C.F.-G.K. 1/69
Rev. C.F. 6/69

SAFFORD - SPRINGERVILLE HWY.
DORSEY GULCH-SYCAMORE GULCH
GREENLEE COUNTY

B.P.R. REGION	STATE	PROJECT NO	SHEET NO.	TOTAL SHEETS	AS BUILT
7	ARIZ	RF-051-2(1)	5	14	

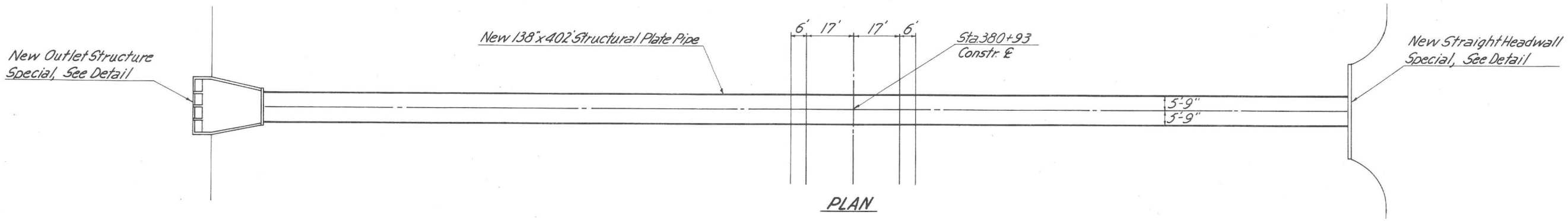

PLAN

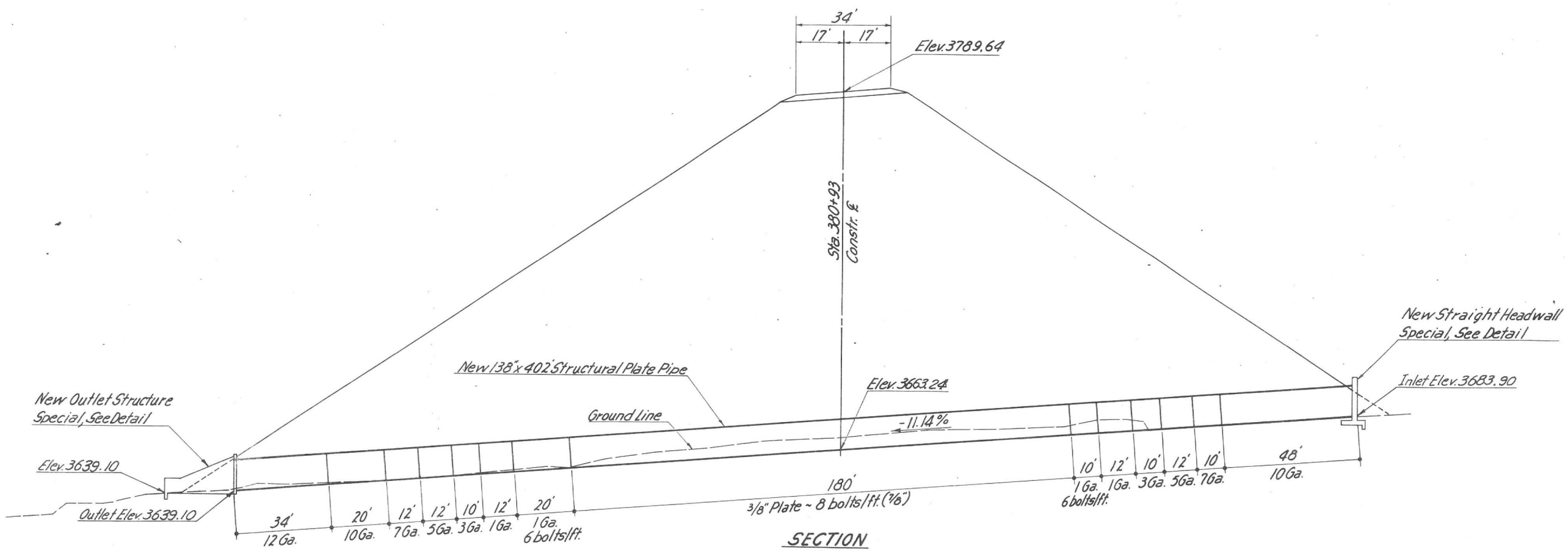

SECTION

DETAIL OF STRUCTURAL PLATE PIPE
Sta. 380+93

NOTE:
1. Pipe shall be 9% factory elongated (Strutting will not be required.)
2. Longitudinal seam bolt spacing shall be 4 bolts per foot unless otherwise noted.
3. Heavy earth moving equipment will not be permitted over pipe until compacted fill has reached a minimum height of 4' over top of pipe.

REDUCED SIZE
DO NOT SCALE

Rev. C.F. 6/69 Finished Plans - Safford Office - F.S.-BB-C.F.-G.K. 1/69

SAFFORD-SPRINGERVILLE HWY.
DORSEY GULCH-SYCAMORE GULCH
GREENLEE COUNTY

FED. ROAD DIV. NO.	STATE	PROJECT NO.	SHEET NO.	TOTAL SHEETS	AS BUILT
7	ARIZONA	RF-051-2(1)	6	14	

REINFORCED CONCRETE BOX CULVERTS 20' CLEAR SPAN* OR LESS

Station on ℄	Description	Drawings Req'd: Spec. Sh. No's.	Drawings Req'd: Standards	Approximate Quantities: Struct. Excav. C.Y.	Class A Conc. C.Y.	Reinf. Steel lbs	Spec. Back-fill C.Y.	Remove Str. Conc. C.Y.	Place Dowels ea.	Drain. Excav. C.Y.
359+00	New 6'x7'x47'-6"		C1-6-1, C1-6-5	235	47.40	4,390	95			
401+30	New 6'x7'x77'-9", 45° Skew		C1-6-1, 45° Sk. & C1-6-5, 45° Sk.	250	76.20	6,965	240			

REINFORCED CONCRETE BOX CULVERTS OVER 20' CLEAR SPAN*

Station Beginning & Ending	Description	Drawings Req'd: Spec. Sh. No's.	Drawings Req'd: Standards	Approximate Quantities: Struct. Excav. C.Y.	Class A Conc. C.Y.	Reinf. Steel lbs.	Spec. Back-fill C.Y.	Remove Str. Conc. C.Y.	Place Dowels ea.	Drain. Excav. C.Y.

BRIDGES AND MISCELLANEOUS STRUCTURES**

Station Beginning & Ending or ℄	Description	Spec. Sheet No's.	Standards

STANDARDS LIST.
C1-6-1
C1-6-5
C1-6-1, 45° Sk.
C1-6-5, 45° Sk.

* Clear span denotes distance along ℄ roadway between inside face of exterior walls.

**See Structure Plans for quantities

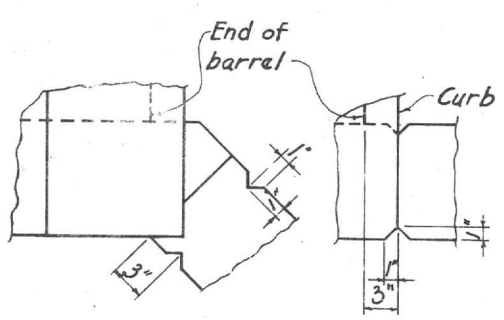

CULVERT CRACK CONTROL DETAILS
To be used on all wingwalls @ 3" from junction of wingwall to barrel.

GENERAL NOTES: Box Culvert Structures
Construction - Std. Specs. Ariz. Hwy. Dept. Edition of 1969.
All dimensions for reinforcing steel shall be to center of bars except when noted otherwise.
Joints - All box culvert structures shall have contraction or cold joints in the top slab and walls (optional in floor slab) spaced not more than 40 feet apart or as shown. The joint may be made with ¼" plywood bulkhead which shall be left in place. Reinforcing steel shall project through the joint.

REDUCED SIZE DO NOT SCALE

		DATE
LAYOUT		
DESIGN		
ARCHITECTURE		
DRAWN		
TRACED		
CHECKED		

ARIZONA HIGHWAY DEPARTMENT
BRIDGE DIVISION

STRUCTURE SUMMARY SHEET

SHEET NO. OF | BRIDGE NUMBER | DRAWING NUMBER | BRIDGE ENGINEER

Fin. Plans - Safford Office 12-1-69 Rev. CF 6/69 L.N.J.

SAFFORD – SPRINGERVILLE HWY.
DORSEY GULCH-SYCAMORE GULCH
GREENLEE COUNTY

B. P. R. REGION	STATE	PROJECT NO.	SHEET NO.	TOTAL SHEETS	AS BUILT
7	ARIZ.	RF-051-2(1)	7	14	

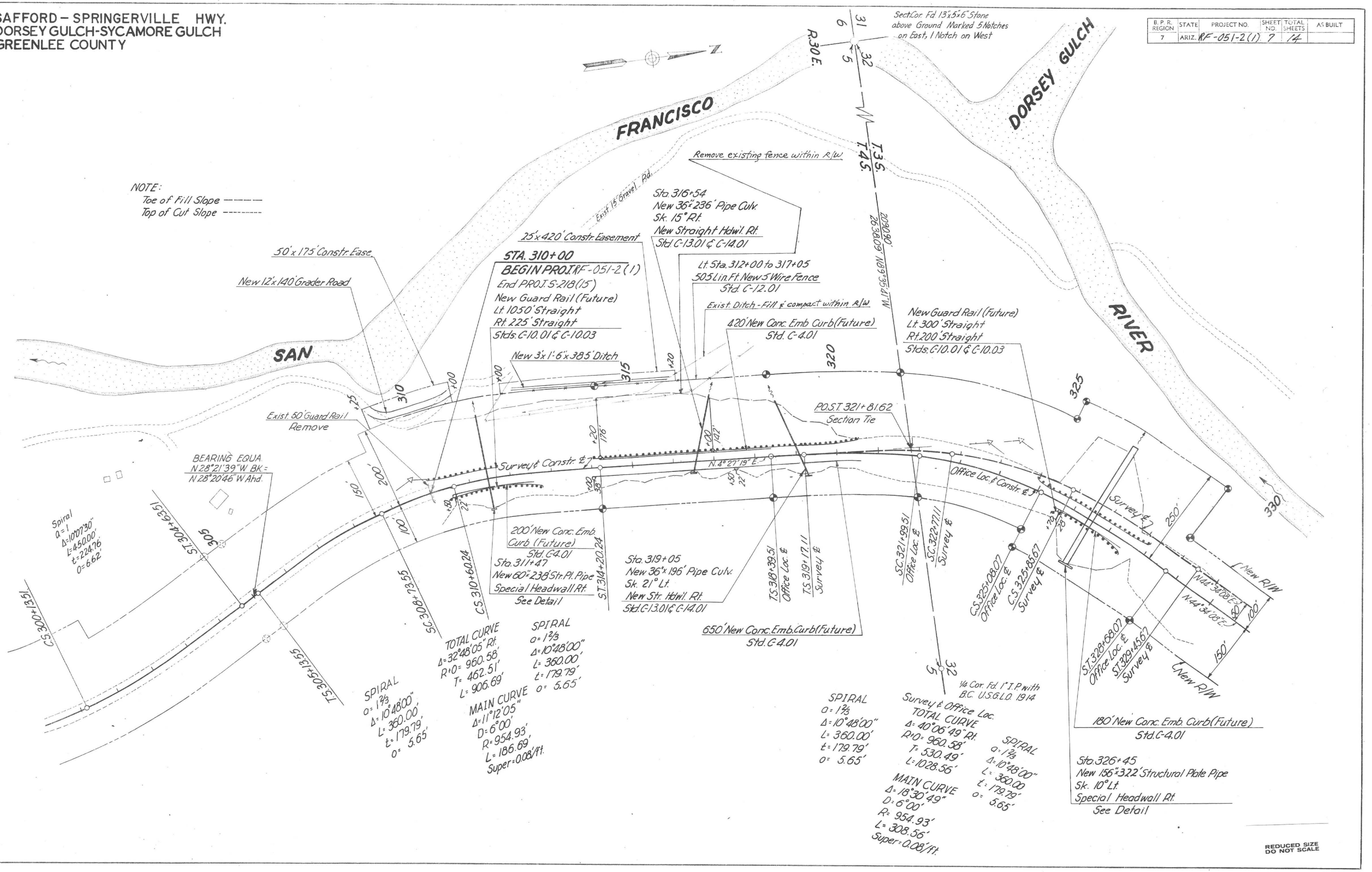

REDUCED SIZE DO NOT SCALE

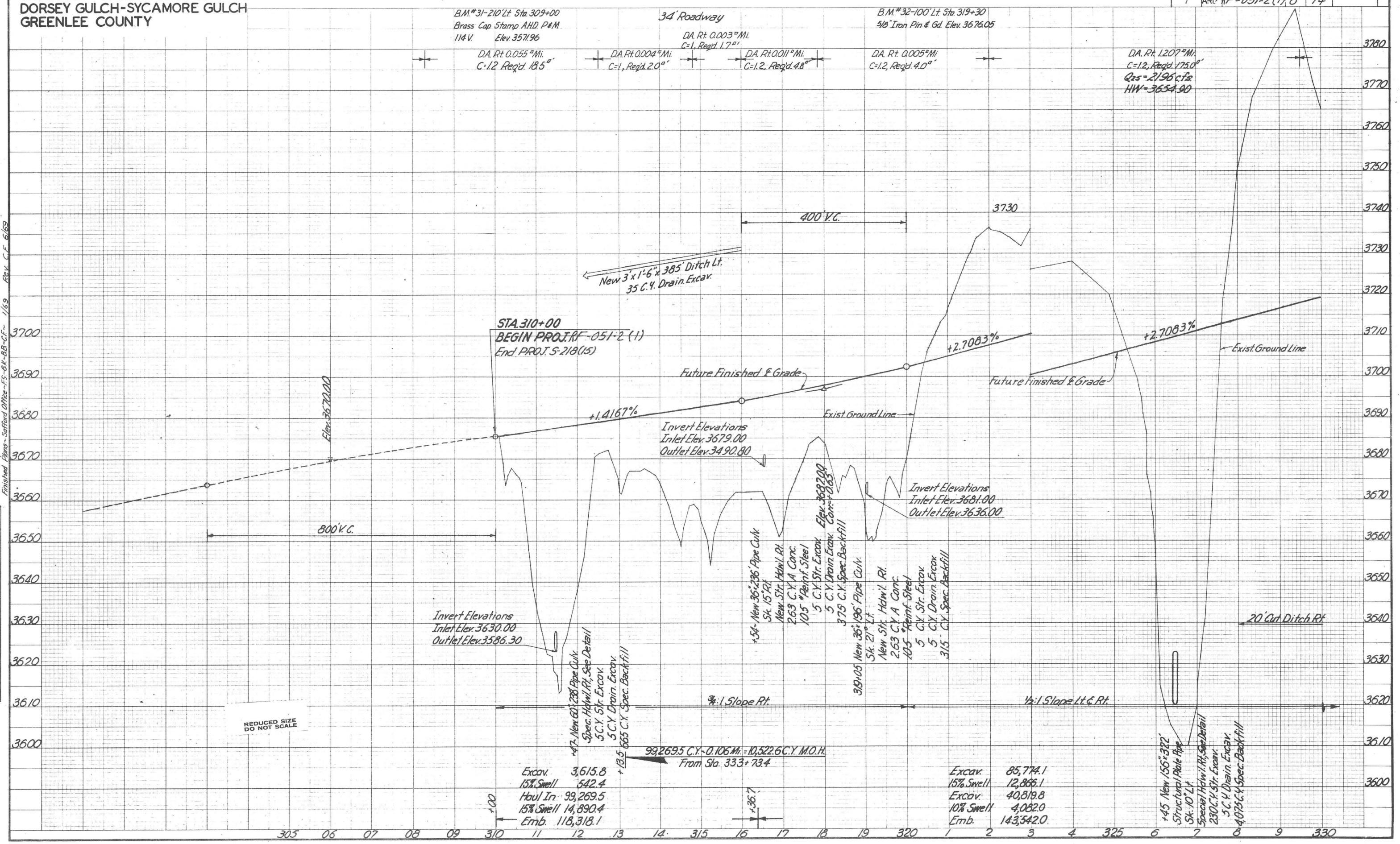

SAFFORD — SPRINGERVILLE HWY.
DORSEY GULCH-SYCAMORE GULCH
GREENLEE COUNTY
B.PR. REGION 7
STATE ARIZ
PROJECT NO. RF-051-2 (1)
SHEET NO. 8
TOTAL SHEETS 14
AS BUILT
B.M. #31-210' Lt. Sta. 309+00
Brass Cap Stamp AHD. P&M
114 V. Elev. 3571.96
34' Roadway
B.M. #32-100' Lt. Sta. 319+30
5/8" Iron Pin & Gd. Elev. 3676.05
D.A. Rt. 0.055 □Mi. C=1.2 Req'd. 18.5□'
D.A. Rt. 0.004 □Mi. C=1, Req'd. 2.0□'
D.A. Rt. 0.003 □Mi. C=1, Req'd. 1.7□'
D.A. Rt. 0.011 □Mi. C=1.2, Req'd. 4.8□'
D.A. Rt. 0.005 □Mi. C=1.2, Req'd. 4.0□'
D.A. Rt. 1.207 □Mi. C=1.2, Req'd. 175.0□'
Q25 = 2196 cfs.
HW = 3654.90
400' V.C.
3730
New 3' x 1'-6" x 385' Ditch Lt.
35 C.Y. Drain. Excav.
STA. 310+00
BEGIN PROJ. RF-051-2 (1)
End PROJ. S-218(15)
+2.7083%
+2.7083%
Exist. Ground Line
Future Finished ℄ Grade
Future Finished ℄ Grade
Elev. 3670.00
+1.4167%
Exist. Ground Line
Invert Elevations
Inlet Elev. 3679.00
Outlet Elev. 3490.80
Invert Elevations
Inlet Elev. 3681.00
Outlet Elev. 3636.00
800' V.C.
Invert Elevations
Inlet Elev. 3630.00
Outlet Elev. 3586.30
+54 - New 36" x 236' Pipe Culv.
Sk. 15° Rt.
New Str. Hdw'l. Rt.
2.63 C.Y. A Conc.
105 # Reinf. Steel
5 C.Y. Str. Excav.
5 C.Y. Drain. Excav.
375 C.Y. Spec. Backfill
Elev. 3687.00
Corr. +0.65
319+05 New 36" x 196' Pipe Culv.
Sk. 21° Lt.
New Str. Hdw'l. Rt.
2.63 C.Y. A Conc.
105 # Reinf. Steel
5 C.Y. Str. Excav.
5 C.Y. Drain. Excav.
315 C.Y. Spec. Backfill
20' Cut Ditch Rt.
+47 - New 60" x 238' Pipe Culv.
Spec. Hdw'l. Rt., See Detail
5 C.Y. Str. Excav.
5 C.Y. Drain. Excav.
665 C.Y. Spec. Backfill
+13.5
¾:1 Slope Rt.
½:1 Slope Lt. & Rt.
99,269.5 C.Y. - 0.106 Mi. = 10,522.6 C.Y. M.O.H.
From Sta. 333+73.4
Excav. 3,615.8
15% Swell 542.4
Haul In 99,269.5
15% Swell 14,890.4
Emb. 118,318.1
+00
+36.7
Excav. 85,774.1
15% Swell 12,866.1
Excav. 40,819.8
10% Swell 4,082.0
Emb. 143,542.0
+45 New 156" x 322'
Structural Plate Pipe
Sk. 10° Lt.
Special Hdw'l. Rt., See Detail
230 C.Y. Str. Excav.
5 C.Y. Drain. Excav.
4,075 C.Y. Spec. Backfill
REDUCED SIZE
DO NOT SCALE
Finished Plans - Safford Office - FS-GK-BB-CF - 1/69 Rev. C.F. 6/69
3700
3690
3680
3670
3660
3650
3640
3630
3620
3610
3600
3780
3770
3760
3750
3740
3730
3720
3710
3700
3690
3680
3670
3660
3650
3640
3630
3620
3610
3600
305
06
07
08
09
310
11
12
13
14
315
16
17
18
19
320
1
2
3
4
325
6
7
8
9
330

SAFFORD-SPRINGERVILLE HWY.
DORSEY GULCH-SYCAMORE GULCH
GREENLEE COUNTY

B.P.R. REGION	STATE	PROJECT NO.	SHEET NO.	TOTAL SHEETS	AS BUILT
7	ARIZ	RF-051-2 (1)	9	14	

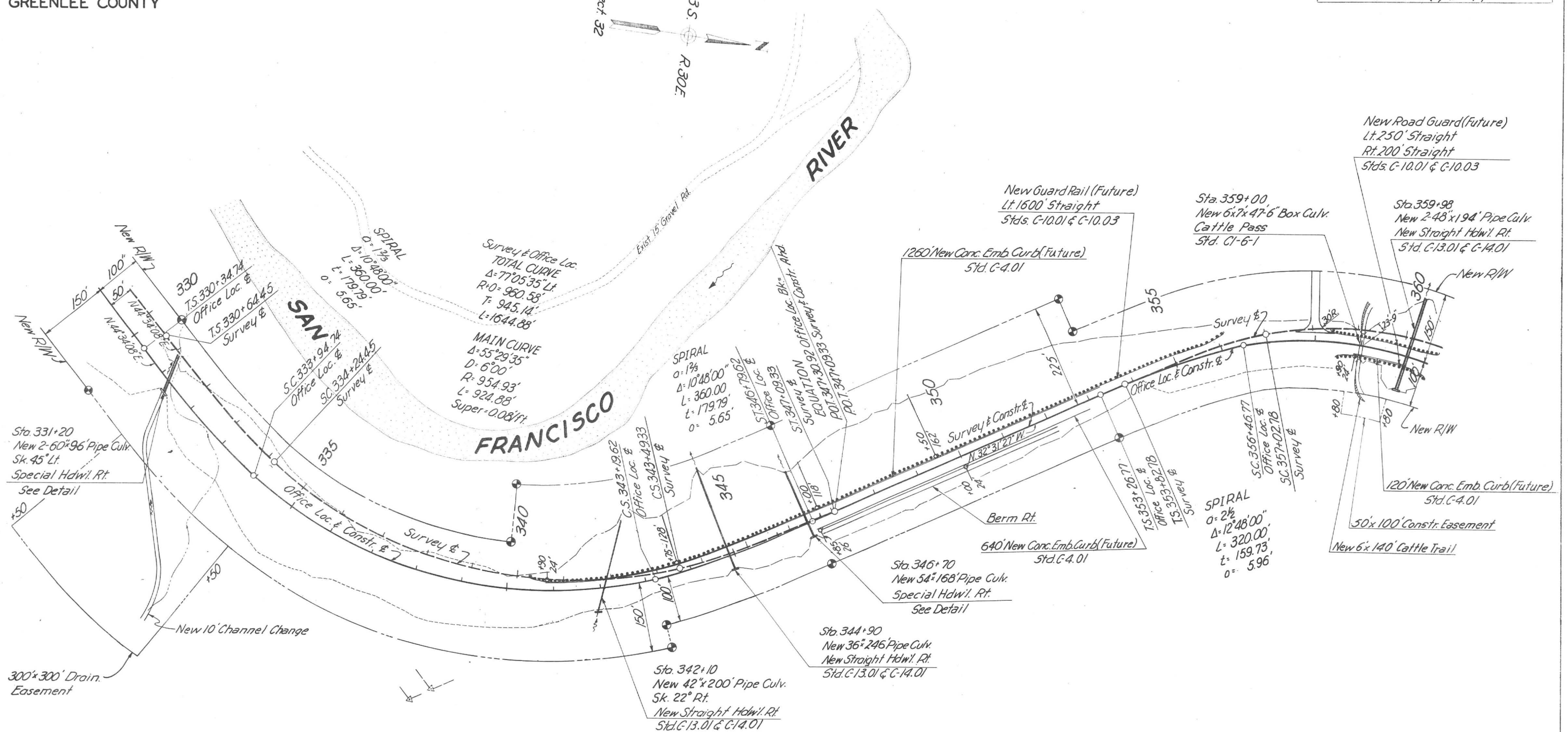

REDUCED SIZE
DO NOT SCALE

Finished Plans-Safford Office-F.S.-G.K.-B.B.-C.F.-1/69
Rev. C.F.-6/69
C.J. Storin 7-64
G.K. 1-67
NOTE BOOK ALIGNMENT CHECKED
NO. 662371 RT. OF WAY CHECKED
6623M1

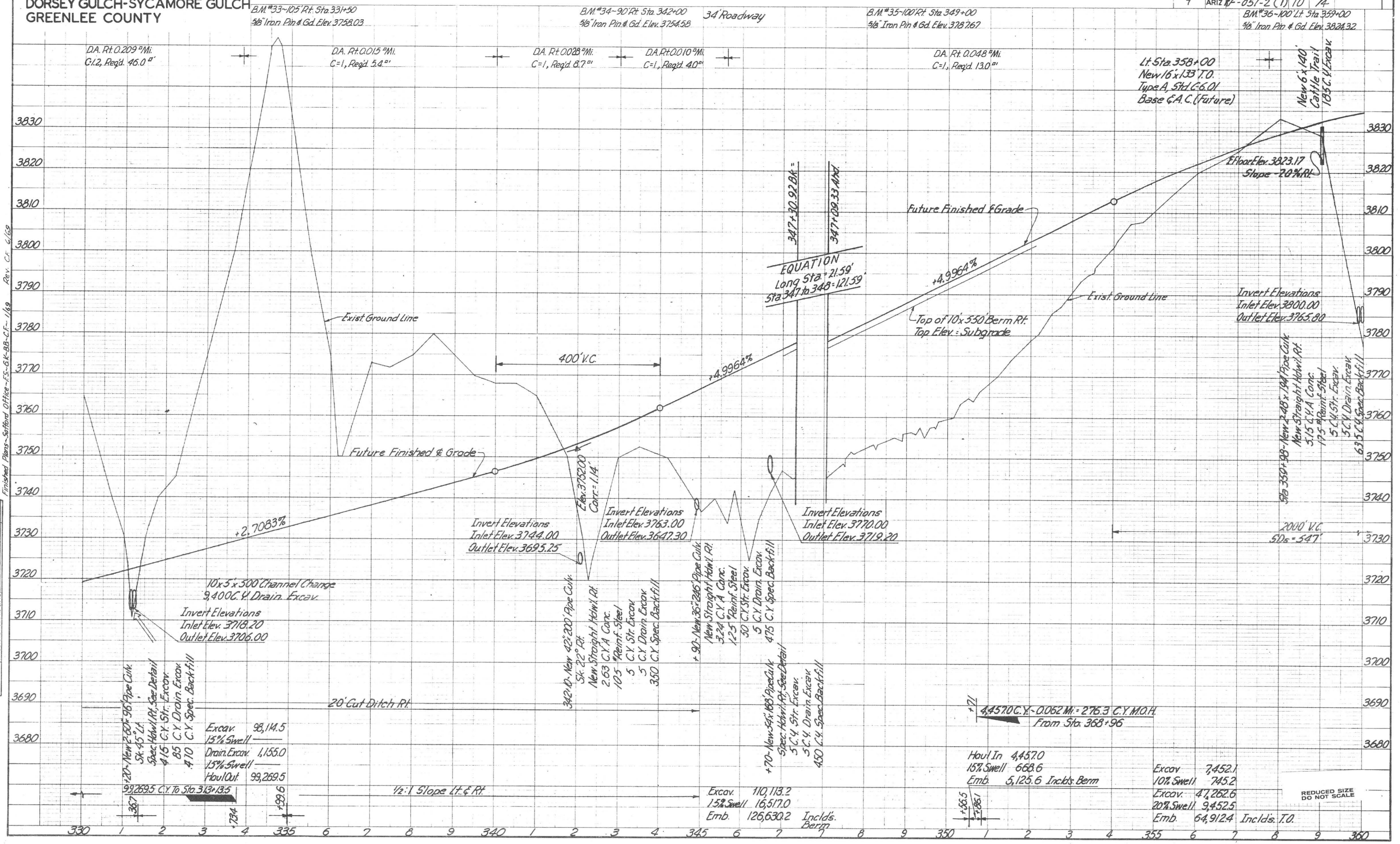
SAFFORD - SPRINGERVILLE HWY.
DORSEY GULCH-SYCAMORE GULCH
GREENLEE COUNTY
B.P.R. REGION 7
STATE ARIZ
PROJECT NO. RF-051-2 (1)
SHEET NO. 10
TOTAL SHEETS 14
AS BUILT
B.M. #33~105' Rt. Sta. 331+50
5/8" Iron Pin & Gd. Elev. 3758.03
B.M. #34~90' Rt. Sta. 342+00
5/8" Iron Pin & Gd. Elev. 3754.58
34' Roadway
B.M. #35~100' Rt. Sta. 349+00
5/8" Iron Pin & Gd. Elev. 3787.67
B.M. #36~100' Lt. Sta. 359+00
5/8" Iron Pin & Gd. Elev. 3824.32
D.A. Rt. 0.209 □Mi.
C=1.2, Req'd. 46.0 □'
D.A. Rt. 0.015 □Mi.
C=1, Req'd. 5.4 □'
D.A. Rt. 0.028 □Mi.
C=1, Req'd. 8.7 □'
D.A. Rt. 0.010 □Mi.
C=1, Req'd. 4.0 □'
D.A. Rt. 0.048 □Mi.
C=1, Req'd. 13.0 □'
Lt. Sta. 358+00
New 16'x133' T.O.
Type A, Std. C-6.01
Base ℄ A.C. (Future)
New 6'x140' Cattle Trail
185 C.Y. Excav.
Exist. Ground Line
Future Finished ℄ Grade
+4.9964%
+2.7083%
400' V.C.
347+30.92 Bk.=
347+09.33 Ahd.
EQUATION
Long Sta. = 21.59'
Sta. 347 to 348 = 121.59'
Top of 10'x550' Berm Rt.
Top Elev. = Subgrade
Invert Elevations
Inlet Elev. 3800.00
Outlet Elev. 3765.80
Elev. 3752.00
Corr. = 1.14'
Invert Elevations
Inlet Elev. 3744.00
Outlet Elev. 3695.25
Invert Elevations
Inlet Elev. 3763.00
Outlet Elev. 3647.30
Invert Elevations
Inlet Elev. 3770.00
Outlet Elev. 3719.20
Sta. 359+98 - New 2.48'x194' Pipe Culv.
New Straight Hdwl. Rt.
5.15 C.Y. A Conc.
175 #Reinf. Steel
5 C.Y. Str. Excav.
5 C.Y. Drain. Excav.
635 C.Y. Spec. Backfill
2000' V.C.
SDs = 547'
10'x5'x500' Channel Change
9,400 C.Y. Drain. Excav.
Invert Elevations
Inlet Elev. 3718.20
Outlet Elev. 3706.00
20' Cut Ditch Rt.
+20 - New 2.60'x96' Pipe Culv.
Sk. 45° Lt.
Spec. Hdwl. Rt. See Detail
415 C.Y. Str. Excav.
85 C.Y. Drain. Excav.
410 C.Y. Spec. Backfill
Excav. 98,114.5
15% Swell
Drain. Excav. 1,155.0
15% Swell
Haul Out. 99,269.5
99,269.5 C.Y. To Sta. 313+13.5
1/2:1 Slope Lt. & Rt.
342+10 - New 42"x200' Pipe Culv.
Sk. 22° Rt.
New Straight Hdwl. Rt.
2.63 C.Y. A Conc.
105 #Reinf. Steel
5 C.Y. Str. Excav.
5 C.Y. Drain. Excav.
350 C.Y. Spec. Backfill
+90 - New 36"x246' Pipe Culv.
New Straight Hdwl. Rt.
3.24 C.Y. A Conc.
125 #Reinf. Steel
50 C.Y. Str. Excav.
5 C.Y. Drain. Excav.
475 C.Y. Spec. Backfill
+70 - New 54"x188' Pipe Culv.
Spec. Hdwl. Rt. See Detail
5 C.Y. Str. Excav.
5 C.Y. Drain. Excav.
450 C.Y. Spec. Backfill
Excav. 110,113.2
15% Swell 16,517.0
Emb. 126,630.2 Incld's. Berm
4,457.0 C.Y. ~ 0.062 Mi. = 276.3 C.Y. M.O.H.
From Sta. 368+96
Haul In 4,457.0
15% Swell 668.6
Emb. 5,125.6 Incld's. Berm
Excav. 7,452.1
10% Swell 745.2
Excav. 47,262.6
20% Swell 9,452.5
Emb. 64,912.4 Incld's. T.O.
REDUCED SIZE DO NOT SCALE
Finished Plans - Safford Office - F.S. - G.K. - B.B. - C.F. - 1/69
Rev. C.F. 6/69
NOTE BOOK NO.
SURVEYED
PLOTTED
GRADES CHECKED
B.M.'s NOTED
STRUCTURE NOTATNS CH'KD.
3830
3820
3810
3800
3790
3780
3770
3760
3750
3740
3730
3720
3710
3700
3690
3680
330
335
340
345
350
355
360

SAFFORD-SPRINGERVILLE HWY.
DORSEY GULCH-SYCAMORE GULCH
GREENLEE COUNTY

B.P.R. REGION	STATE	PROJECT NO	SHEET NO.	TOTAL SHEETS	AS BUILT
7	ARIZ	RF-051-2(1)	11	14	

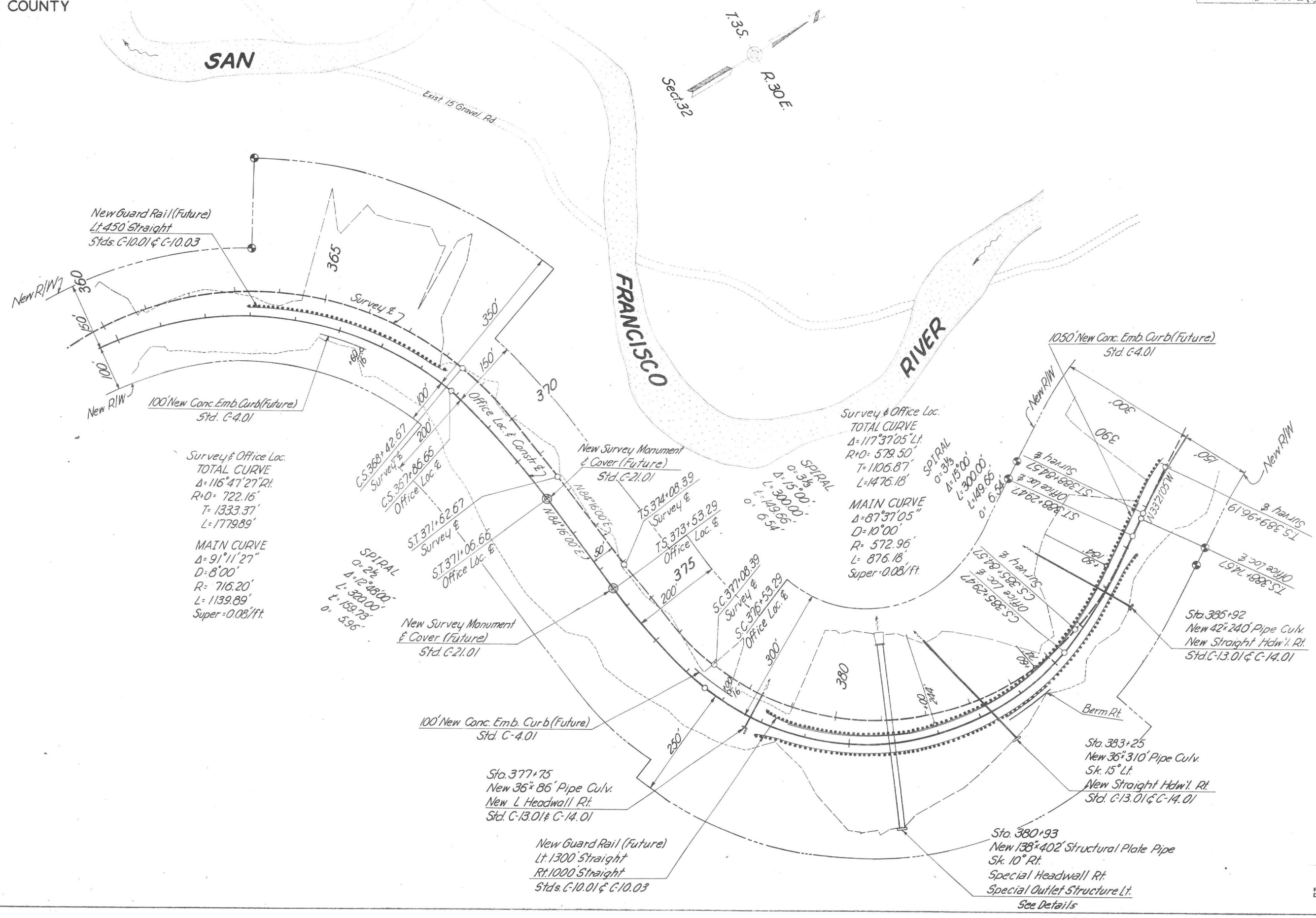

REDUCED SIZE
DO NOT SCALE

Rev.-C.F.-6/69 Finished Plan-Safford Office-F.S.-GK-BB-C.F.-1/69

SURVEYED C.J. Starin 7-64
PLOTTED G.K. 1-67
NOTE BOOK ALIGNMENT CHECKED
NO. 662371 RT OF WAY CHECKED
6623M1

SAFFORD-SPRINGERVILLE HWY.
DORSEY GULCH-SYCAMORE GULCH
GREENLEE COUNTY

B.P.R. REGION	STATE	PROJECT NO.	SHEET NO.	TOTAL SHEETS	AS BUILT
7	ARIZ	RF-051-2(1)	11	14	

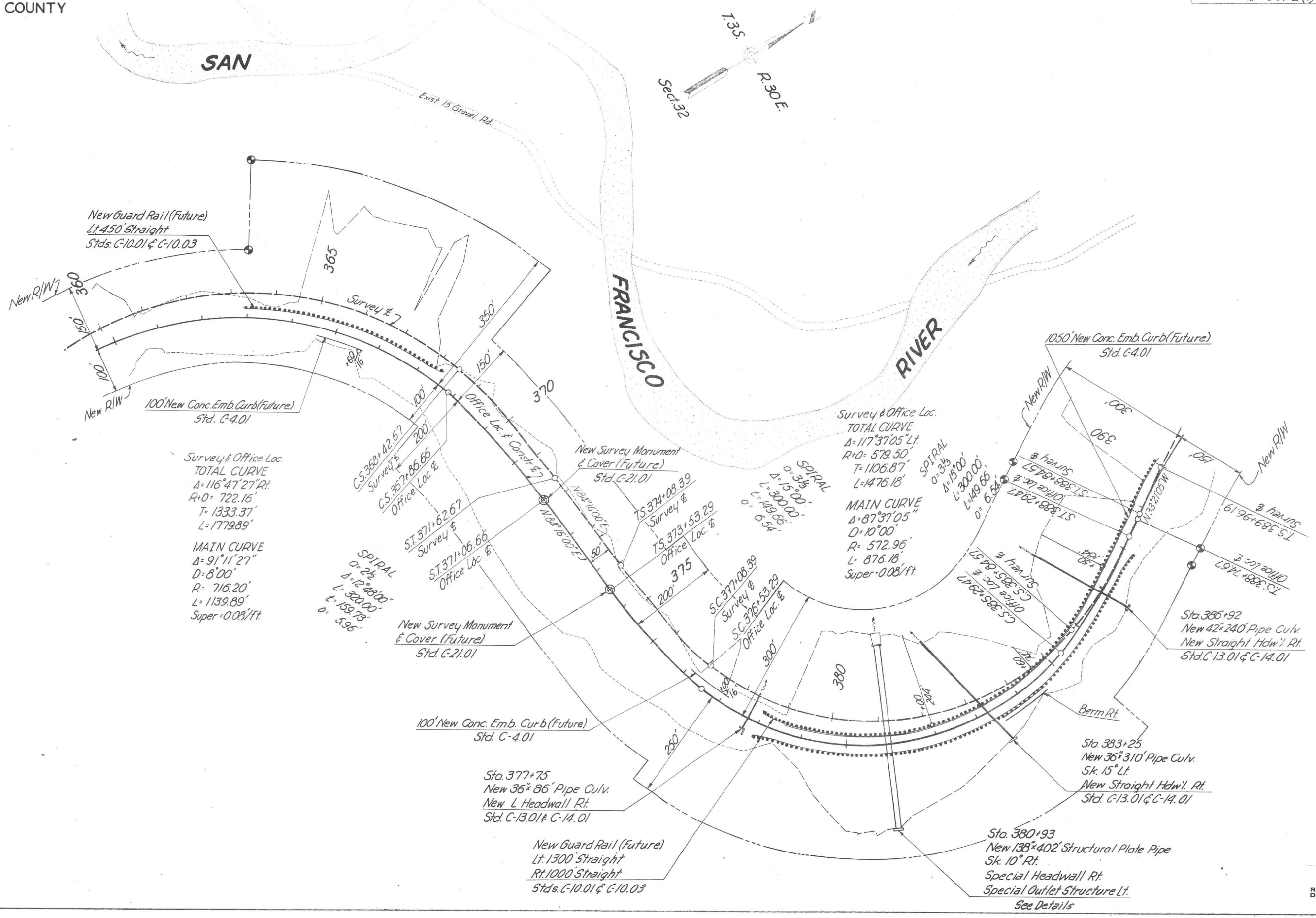

REDUCED SIZE
DO NOT SCALE

Rev. C.F. 6/69 Finished Plan-Safford Office-F.S.-G.K.-B.B.-C.F. 1/69

SURVEYED C.J. Starin 7-64
PLOTTED G.K. 1-67
NOTE BOOK ALIGNMENT CHECKED
NO. 662371 RT OF WAY CHECKED
6623M1

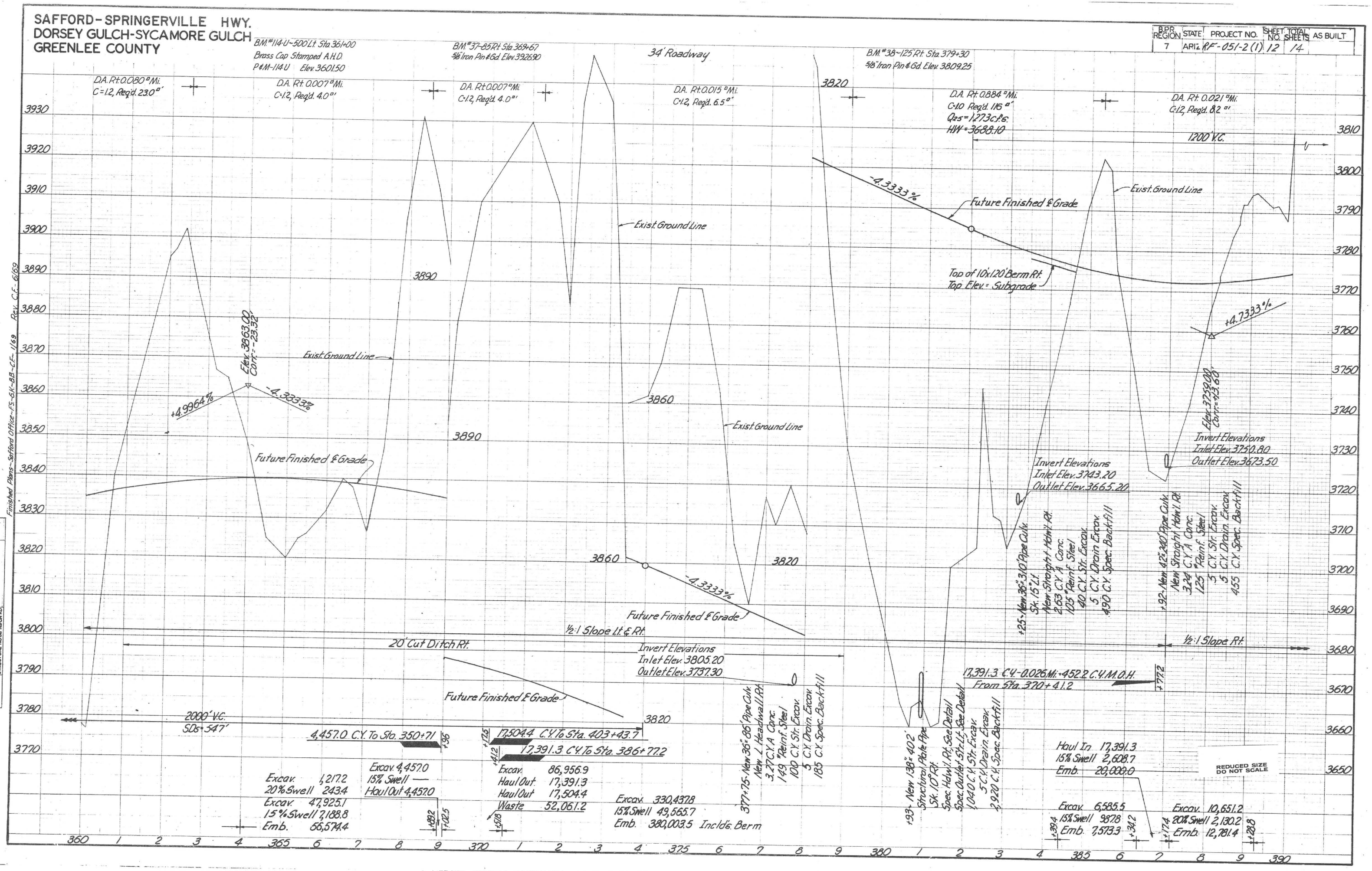
SAFFORD-SPRINGERVILLE HWY.
DORSEY GULCH-SYCAMORE GULCH
GREENLEE COUNTY
B.P.R. REGION 7
STATE ARIZ.
PROJECT NO. RF-051-2(1)
SHEET NO. 12
TOTAL SHEETS 14
AS BUILT
B.M.#114-U~500' Lt. Sta. 361+00
Brass Cap Stamped A.H.D.
P&M-114U Elev. 3601.50
B.M.#37-85' Rt. Sta. 369+67
5/8" Iron Pin & Gd. Elev. 3926.90
34' Roadway
B.M.#38~125' Rt. Sta. 379+30
5/8" Iron Pin & Gd. Elev. 3809.25
D.A. Rt. 0.080 □ Mi.
C=1.2, Req'd. 23.0 □'
D.A. Rt. 0.007 □ Mi.
C=1.2, Req'd. 4.0 □'
D.A. Rt. 0.007 □ Mi.
C=1.2, Req'd. 4.0 □'
D.A. Rt. 0.015 □ Mi.
C=1.2, Req'd. 6.5 □'
D.A. Rt. 0.884 □ Mi.
C=1.0 Req'd. 116 □'
Q25=1273 c.f.s.
HW=3688.10
D.A. Rt. 0.021 □ Mi.
C=1.2, Req'd. 8.2 □'
1200' V.C.
-4.3333%
Future Finished ℄ Grade
Exist. Ground Line
Top of 10'x120' Berm Rt.
Top Elev. = Subgrade
+4.7333%
Elev. 3863.00
Corr. = -23.32'
+4.9964%
-4.3333%
Elev. 3759.00
Corr. = +13.60'
Invert Elevations
Inlet Elev. 3750.80
Outlet Elev. 3673.50
Invert Elevations
Inlet Elev. 3743.20
Outlet Elev. 3665.20
+25-New 36"x310' Pipe Culv.
Sk. 15° Lt.
New Straight Hdw'l. Rt.
2.63 C.Y. A Conc.
105 #Reinf. Steel
40 C.Y. Str. Excav.
5 C.Y. Drain Excav.
490 C.Y. Spec. Backfill
+92-New 42"x240' Pipe Culv.
New Straight Hdw'l. Rt.
3.24 C.Y. A Conc.
125 #Reinf. Steel
5 C.Y. Str. Excav.
5 C.Y. Drain. Excav.
455 C.Y. Spec. Backfill
½:1 Slope Lt. & Rt.
½:1 Slope Rt.
20' Cut Ditch Rt.
Invert Elevations
Inlet Elev. 3805.20
Outlet Elev. 3737.30
377+75-New 36"x86' Pipe Culv.
New ⊥ Headwall Rt.
3.27 C.Y. A Conc.
149 #Reinf. Steel
100 C.Y. Str. Excav.
5 C.Y. Drain. Excav.
185 C.Y. Spec. Backfill
+93-New 138"x402'
Structural Plate Pipe
Sk. 10° Rt.
Spec. Hdw'l. Rt. See Detail
Spec. Outlet Str. Lt. See Detail
1,040 C.Y. Str. Excav.
5 C.Y. Drain. Excav.
2,920 C.Y. Spec. Backfill
17,391.3 C.Y.-0.026 Mi.=452.2 C.Y. M.O.H.
From Sta. 370+41.2
+77.2
2000' V.C.
SDs=547'
4,457.0 C.Y. To Sta. 350+71
+96
17,504.4 C.Y. To Sta. 403+43.7
+17.5
17,391.3 C.Y. To Sta. 386+77.2
+41.2
Excav. 1,217.2
20% Swell 243.4
Excav. 47,925.1
15% Swell 7,188.8
Emb. 56,574.4
Excav. 4,457.0
15% Swell —
Haul Out 4,457.0
+89.2
+102.5
Excav. 86,956.9
Haul Out 17,391.3
Haul Out 17,504.4
Waste 52,061.2
+51.8
Excav. 330,437.8
15% Swell 49,565.7
Emb. 380,003.5 Incld's. Berm
Haul In 17,391.3
15% Swell 2,608.7
Emb. 20,000.0
Excav. 6,585.5
15% Swell 987.8
Emb. 7,573.3
+39.4
+34.2
Excav. 10,651.2
20% Swell 2,130.2
Emb. 12,781.4
+17.4
+28.8
REDUCED SIZE
DO NOT SCALE
Finished Plans-Safford Office-FS-GK-BB-CF-1169 Rev. C.F.-6/69
NOTE BOOK NO.
GRADES CHECKED
B.M.'S NOTED
STRUCTURE NOTATIONS CHKD.
4-67

SAFFORD - SPRINGERVILLE HWY.
DORSEY GULCH-SYCAMORE GULCH
GREENLEE COUNTY

B.P.R. REGION	STATE	PROJECT NO	SHEET NO.	TOTAL SHEETS	AS BUILT
7	ARIZ	RF-051-2(1)	13	14	

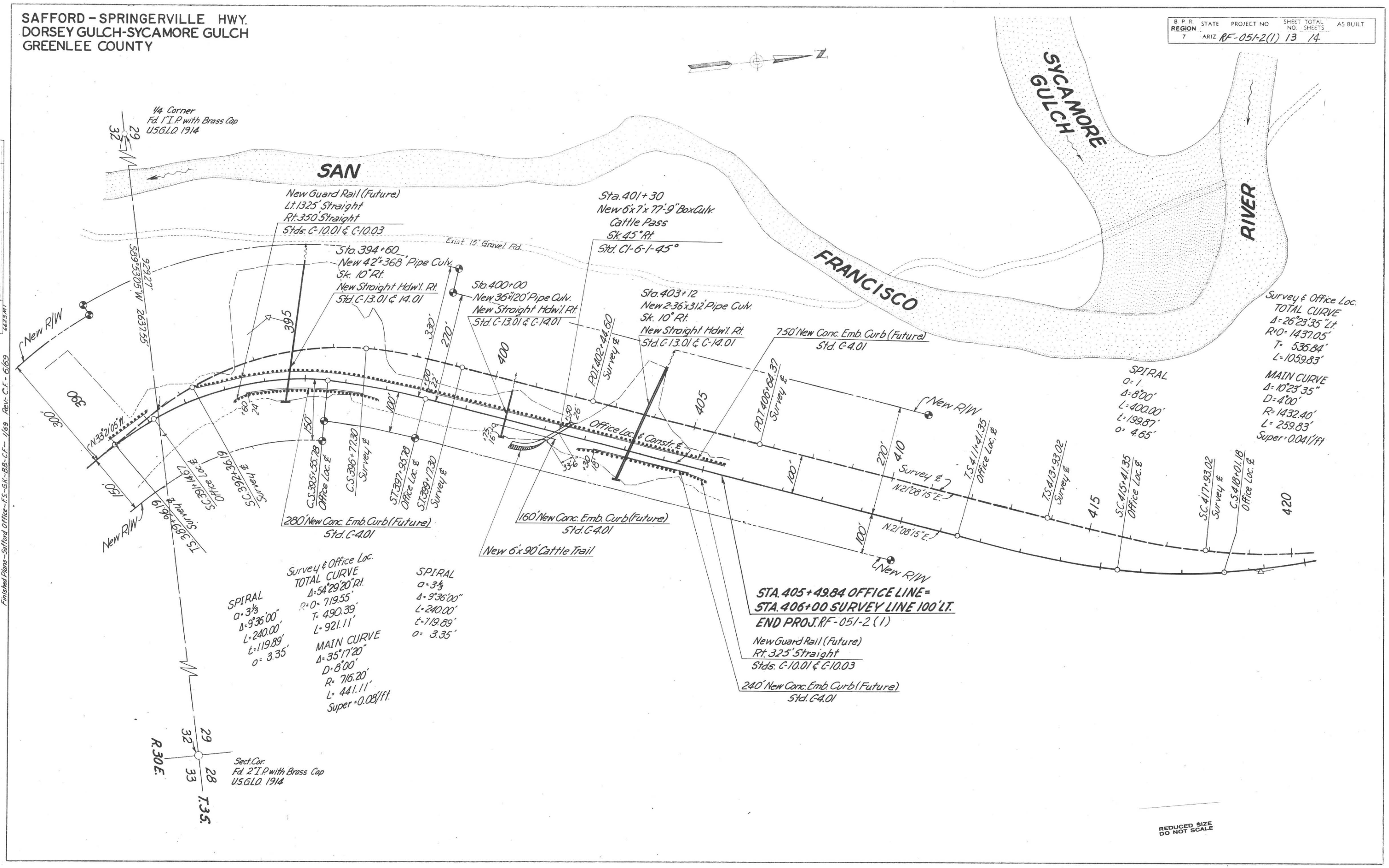

REDUCED SIZE
DO NOT SCALE

PLAN
NOTE BOOK NO. 662.37
SURVEYED C.J. Storin 7-64
PLOTTED G.K. 1-67
ALIGNMENT CHECKED
RT. OF WAY CHECKED
662.37 MT

Finished Plans - Safford Office - F.S.-G.K.-B.B.-C.F. - 1/69 Rev. C.F. - 6/69

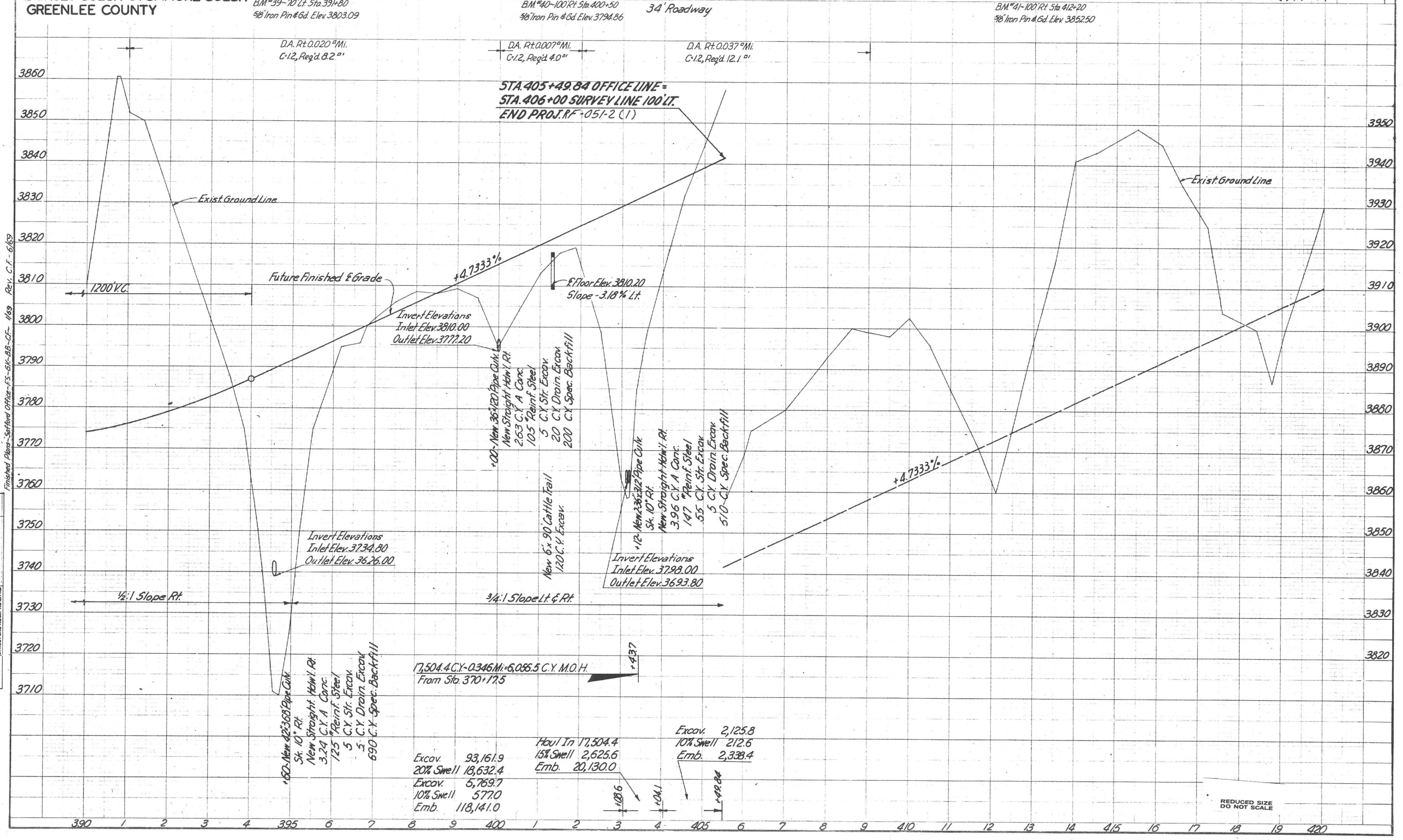
SAFFORD - SPRINGERVILLE HWY.
DORSEY GULCH-SYCAMORE GULCH
GREENLEE COUNTY
B.P.R. REGION 7
STATE ARIZ
PROJECT NO. RF-051-2 (1)
SHEET NO. 14
TOTAL SHEETS 14
AS BUILT
B.M. #39-70' Lt. Sta. 391+80
5/8" Iron Pin & Gd. Elev. 3803.09
B.M. #40-100' Rt. Sta. 400+50
5/8" Iron Pin & Gd. Elev. 3794.86
34' Roadway
B.M. #41-100' Rt. Sta. 412+20
5/8" Iron Pin & Gd. Elev. 3852.50
D.A. Rt. 0.020 □' Mi.
C=1.2, Req'd. 8.2 □'
D.A. Rt. 0.007 □' Mi.
C=1.2, Req'd. 4.0 □'
D.A. Rt. 0.037 □' Mi.
C=1.2, Req'd. 12.1 □'
STA. 405+49.84 OFFICE LINE =
STA. 406+00 SURVEY LINE 100' LT.
END PROJ. RF-051-2 (1)
Exist. Ground Line
Future Finished ℄ Grade
1200' V.C.
+4.7333%
℄ Floor Elev. 3810.20
Slope -3.18% Lt.
Invert Elevations
Inlet Elev. 3810.00
Outlet Elev. 3777.20
+00-New 36"x120' Pipe Culv.
New Straight Hdw'l. Rt.
2.63 C.Y. A Conc.
105 #Reinf. Steel
5 C.Y. Str. Excav.
20 C.Y. Drain. Excav.
200 C.Y. Spec. Backfill
New 6'x 90' Cattle Trail
120 C.Y. Excav.
+12-New 2-36"x312' Pipe Culv.
Sk. 10° Rt.
New Straight Hdw'l. Rt.
3.96 C.Y. A Conc.
147 #Reinf. Steel
55 C.Y. Str. Excav.
5 C.Y. Drain. Excav.
510 C.Y. Spec. Backfill
Invert Elevations
Inlet Elev. 3798.00
Outlet Elev. 3693.80
Invert Elevations
Inlet Elev. 3734.80
Outlet Elev. 3626.00
½:1 Slope Rt.
¾:1 Slope Lt. & Rt.
+60-New 42"x368' Pipe Culv.
Sk. 10° Rt.
New Straight Hdw'l. Rt.
3.24 C.Y. A Conc.
125 #Reinf. Steel
5 C.Y. Str. Excav.
5 C.Y. Drain. Excav.
690 C.Y. Spec. Backfill
17,504.4 C.Y.-0.346 Mi.=6,056.5 C.Y. M.O.H.
From Sta. 370+17.5
+43.7
Excav. 93,161.9
20% Swell 18,632.4
Excav. 5,769.7
10% Swell 577.0
Emb. 118,141.0
Haul In 17,504.4
15% Swell 2,625.6
Emb. 20,130.0
Excav. 2,125.8
10% Swell 212.6
Emb. 2,338.4
+08.6
+04.1
+49.84
REDUCED SIZE
DO NOT SCALE
Finished Plans-Safford Office-F.S.-G.K.-B.B.-C.F.-1/69 Rev. C.F.-6/69
C.J. Starin 7-64
G.K. 4-67
SURVEYED
PLOTTED
GRADES CHECKED
B.M.'S NOTED
STRUCTURE NOTATNS CHKD
NOTE BOOK
NO.

STATE OF ARIZONA
STATE HIGHWAY DEPARTMENT

SAFFORD - SPRINGERVILLE HIGHWAY

RF 051-2(1)

DORSEY GULCH - SYCAMORE GULCH

STATION 310+00 to STATION 405+49.84

January 30, 1970

MATERIALS DIVISION INFORMATION

1. Sketches of Materials Sources
2. Test Results on Materials Sources
3. Subgrade Information and Soil Profile

Information contained in the following sheets is information developed by the Materials Division for the planning of this project. It is being made available to prospective bidders for information purposes only and is not to be considered a part of the contract papers. The information is developed as accurately as possible by the methods utilized, however, the State accepts no responsibility for any conditions encountered which may be at variance from information contained herein.

Tests analysis given in the pit tabulation is generally representative of the material in the test pit. However, in the case of pits containing considerable oversize (boulders and broken rock too large to be conveniently placed in a sample sack) some portion of this oversize material may not be included in the sample, consequently, the analysis shown represents only the material without such oversize.

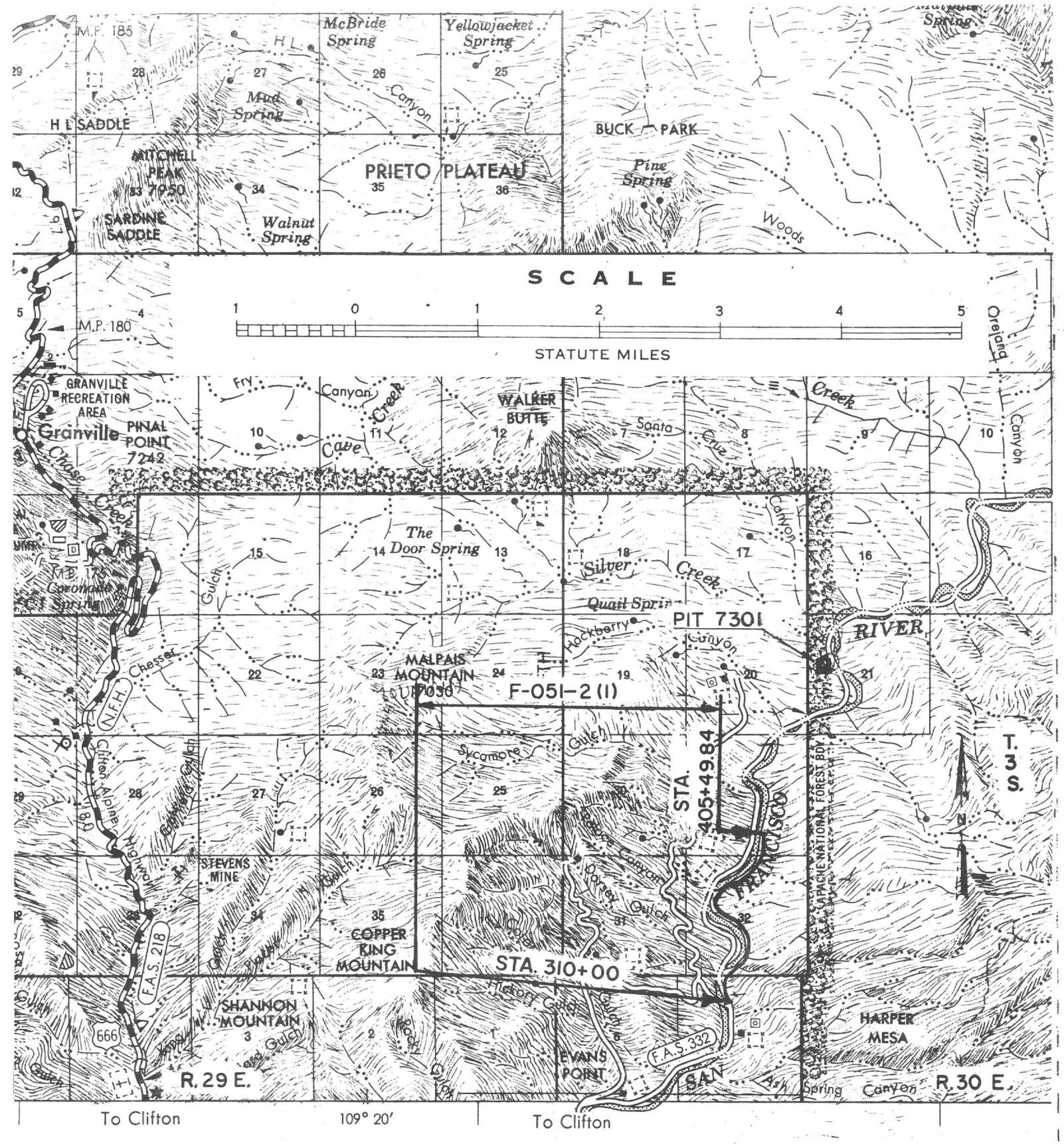

VICINITY MAP

SAFFORD-SPRINGERVILLE HWY.
DORSEY GULCH-SYCAMORE GULCH

ARIZONA HIGHWAY DEPARTMENT

MATERIALS DIVISION

FIELD REPORT ON LOCATION OF BORROW PIT SERIAL NUMBER 7301

FROM DUNCAN - ALPINE HIGHWAY

SOURCE OF MATERIAL SAN FRANCISCO RIVER BARS

PROJECT NUMBER S 218 - 308 P.E.

PROSPECTED BY PECK

A.F.E. 66611 DATE 9-12-64

LOCATION OF PIT SITE 800' LT. STA. 495

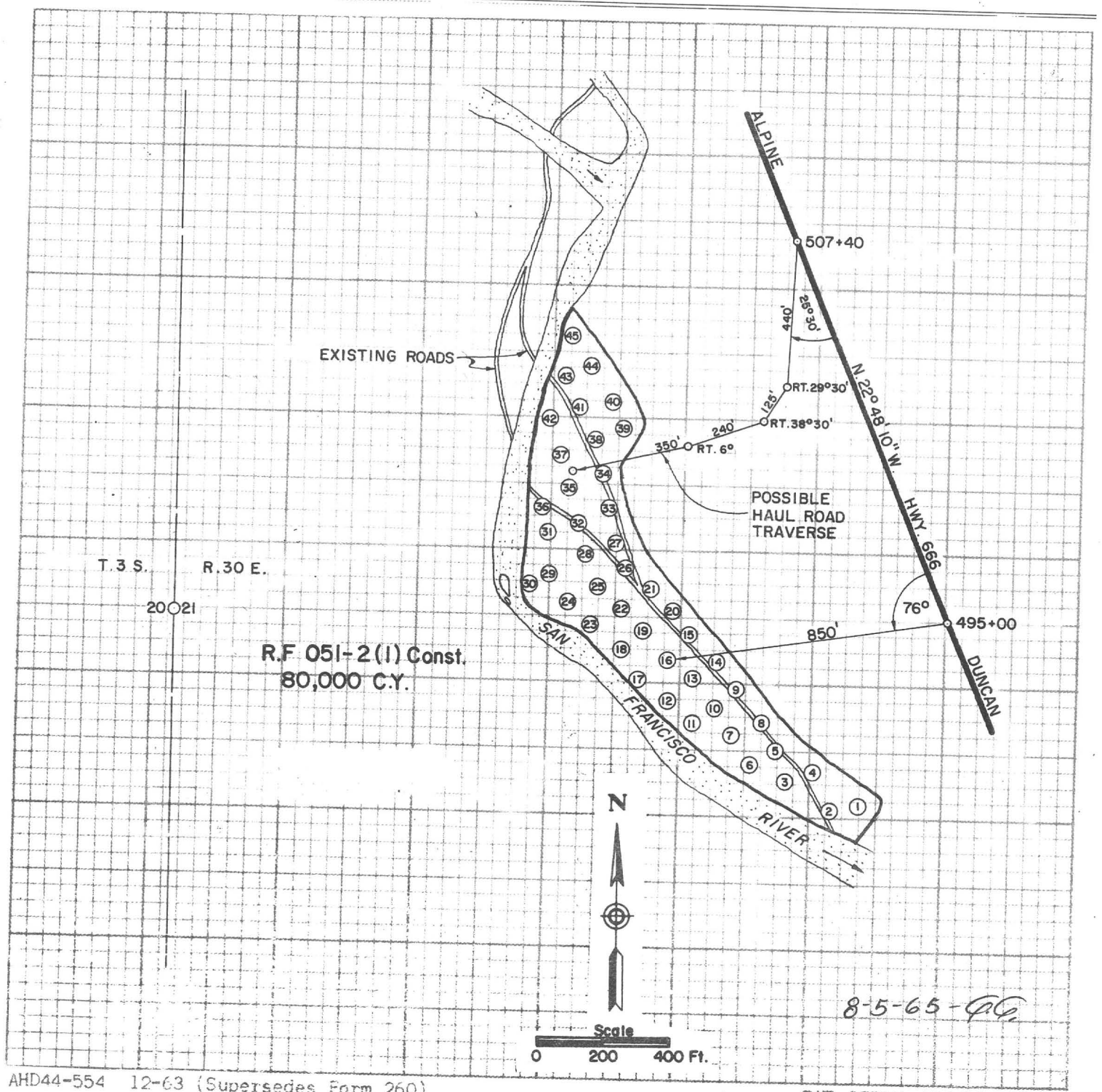

AHD44-554 12-63 (Supersedes Form 260)

PIT SERIAL NUMBER 7301

5.00

AHD 25

Pit Serial No. 7301

ARIZONA STATE HIGHWAY DEPARTMENT
MATERIALS DIVISION

Highway CLIFTON NORTH Project No. S 218-308

Sampled by Peck Date 10/30/64 AFE 66611

Location of Pit 800' Lt. Station 495+00

Material Prospected for AGGREGATE

Designated as Source for Borrow

Hole No.	Depth from Surface		Swell 24 hr.	Swell 48 hr.	Sand Equiv.	PI	Pass 200	Pass 40	Pass 8	Pass 4	Pass 1/4	Pass 3/8	Pass 3/4	Pass 1 1/2	Lab. No. (64)
1	0-10'	NG	0.03	0.06	45	NP	16	96	100						19804
2	0-10'				75	NP	1	17	30	35	38	42	53	71	19805
3	0-3'	O.B.	0.05	0.09	13	NP	55	99	100						19806
3	3'-6'		0.02	0.03	75	NP	1	7	24	40	47	59	77	89	19807
4	0-7'				63	NP	2	22	38	42	45	50	63	81	19808
5	0-8'		0.03	0.05	50	NP	7	29	55	60	62	65	71	78	19809
6	0-8'				69	NP	2	11	27	34	36	40	51	75	19810
7	0-8'		0.01	0.03	77	NP	2	10	26	33	36	40	51	72	19811
8	0-8'	NG			23	NP	20	68	83	87	89	91	96	100	19812
9	0-9'				57	NP	7	66	79	81	82	84	87	93	19813
10	0-8'		0.03	0.05	51	NP	3	16	28	34	37	41	51	69	19814
11	0-7'	?			30	NP	15	44	62	66	68	70	74	80	19815
12	0-8'				63	NP	4	16	30	36	39	43	53	73	19816
13	0-8'		0.03	0.04	52	NP	5	21	34	40	42	45	54	67	19817
14	0-3'	O.B.			18	NP	50	98	100						19818
14	3'-8'				58	NP	4	17	27	31	34	38	48	68	19819
15	0-10'		0.03	0.04	17	NP	8	23	34	38	40	43	53	73	19820
16	0-9'	?			36	NP	13	29	45	51	53	57	66	79	19821
17	0-7'				47	NP	6	24	35	40	42	46	54	70	19822
18	0-8'	?	0.03	0.05	40	NP	9	22	34	40	42	46	55	77	19823
19	0-8'				39	NP	6	20	31	36	39	43	54	78	19824
20	0-10'				44	NP	6	22	37	43	46	51	63	80	19825
21	0-3'		0.02	0.03	62	NP	3	24	46	55	57	60	66	76	19826
21	3'-10'	Bof	0.04	0.07	10	5	44	86	97	100					19827
22	0-8'				50	NP	5	15	27	33	36	40	48	65	19829

Pit Serial No. 7301

AHD 25

Pit Serial No. 7301

ARIZONA STATE HIGHWAY DEPARTMENT
MATERIALS DIVISION

Highway CLIFTON NORTH Project No. S 218-308
Sampled by Peck Date 10/30/64 AFE 66611
Location of Pit 800' Lt. Station 495+00
Material Prospected for AGGREGATE
Designated as Source for Borrow

64

Hole No.	Depth from Surface		Swell 24 hr.	Swell 48 hr.	Sand Equiv.	PI	Pass 200	Pass 40	Pass 8	Pass 4	Pass 1/4	Pass 3/8	Pass 3/4	Pass 1 1/2	Lab. No.
23	0-7'				26	NP	19	43	51	54	56	58	62	70	19829
24	0-3'		0.03	0.05	52	NP	16	72	88	90	92	93	96	100	19830
24	3'-7'		0.02	0.03	54	NP	6	28	44	48	49	51	55	63	19831
25	0-8'	Crushed	0.03	0.05	48	NP	8	20	41	52	59	71	98	100	19803
25	0-8'	Original					4	13	24	31	34	40	54	73	19803
26	0-10'				36	NP	11	35	44	47	48	50	57	69	19832
27	2'-9'				45	NP	7	24	38	44	46	49	58	76	19833
28	0-7'		0.03	0.05	45	NP	6	20	27	31	33	37	46	72	19834
29	0-6'				54	NP	6	19	41	49	52	55	61	74	19835
30	0-6'				48	NP	11	41	60	65	67	71	78	86	19836
31	0-4'		0.03	0.04	49	NP	9	27	44	50	53	57	65	77	19837
32	0-8'				39	NP	7	22	28	30	32	35	43	70	19838
33	2'-9'				50	NP	4	17	27	33	35	39	47	67	19839
34	2'6"-7'		0.03	0.04	48	NP	7	21	36	40	43	48	59	77	19840
34	7'-8'	Bot			5	9	61	95	100						19841
35	0-7'				42	NP	6	22	29	34	36	40	50	66	19842
36	0-4'		0.02	0.04	51	NP	10	45	56	61	62	64	68	74	19843
37	0-3'				19	NP	50	98	100						19844
37	3'-7'				40	NP	8	23	29	33	35	38	46	64	19845
38	2'-9'		0.02		64	NP	3	12	22	27	30	35	51	76	19846
39	0-10'				30	NP	26	74	83	88	90	92	97	99	19847
40	0-10'				58	NP	3	21	34	39	43	51	68	87	19848
41	2'6"-7'		0.03	0.04	54	NP	5	20	30	35	37	41	51	69	19849
42	0-4'				61	NP	3	13	33	40	43	48	58	77	19850
43	0-5'				70	NP	2	8	24	31	34	38	48	68	19851
45	0-4'				70	NP	2	9	24	32	35	41	54	76	19853

Pit Serial No. 7301

AHD 25

Pit Serial No. 7301

ARIZONA STATE HIGHWAY DEPARTMENT
MATERIALS DIVISION

Highway CLIFTON NORTH Project No. S 218-308
Sampled by Peck Date 10/30/64 AFE 66611
Location of Pit 800' Lt. Station 495+00
Material Prospected for AGGREGATE
Designated as Source for Borrow

64

Hole No.	Depth from Surface		Swell 24 hr.	Swell 48 hr.	Sand Equiv.	PI	Pass 200	Pass 40	Pass 8	Pass 4	Pass 1/4	Pass 3/8	Pass 3/4	Pass 1 1/2	Lab. No.
44	0-8'		0.02	0.03	68	NP	3	31	46	53	56	61	71	85	19852

Density when compacted by Static Loading at 7.4% Moisture.

Static Load	Resulting Density
500	119
1250	123
2000	125

19	51%	RETAINED	ON	3"	SCREEN		26%	RETAINED	ON	6"	SCREEN				
35	46%	"	"	"	"		22%	"	"	"	"				

Pit Serial No. 7301

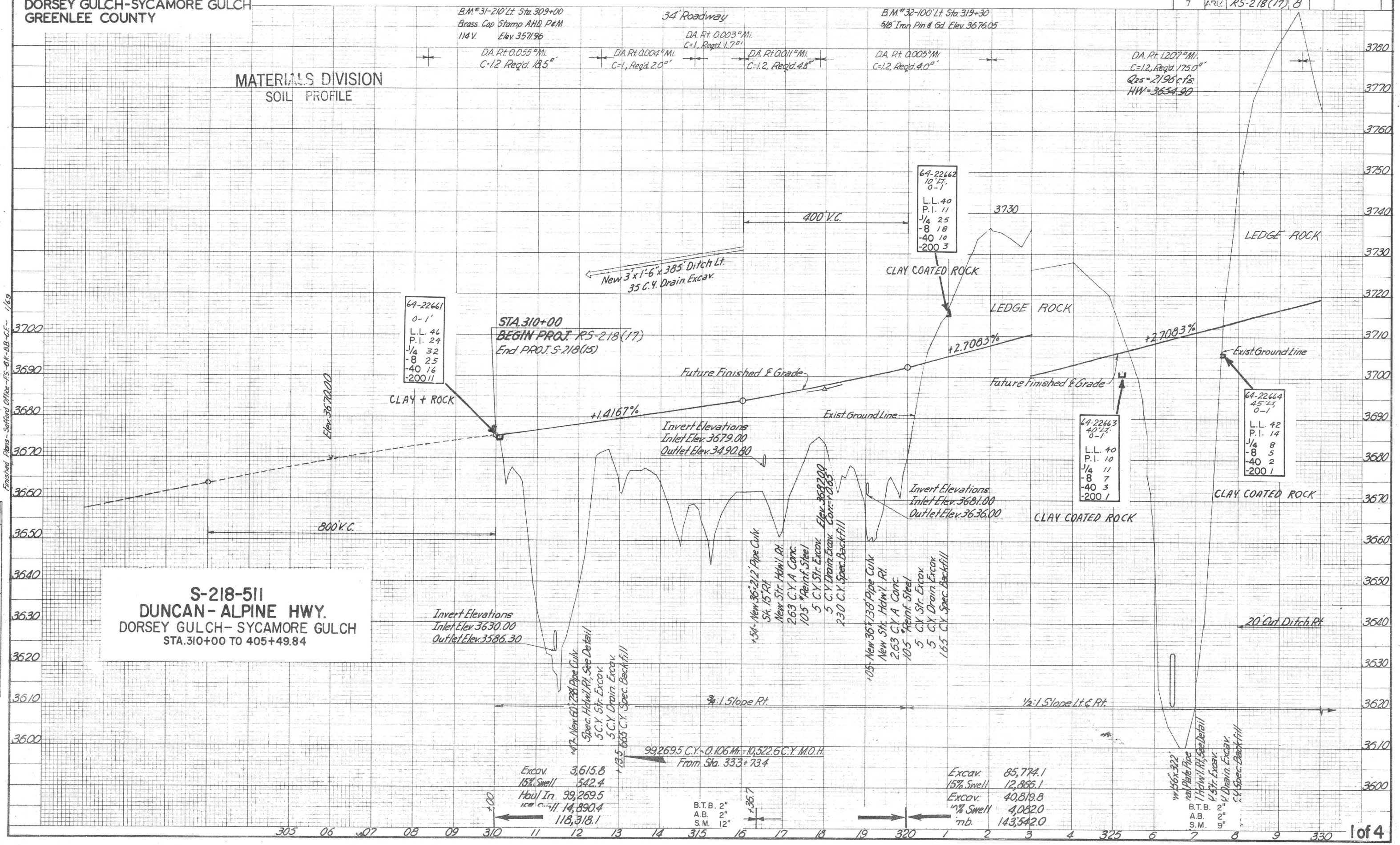
DUNCAN-ALPINE HWY.
DORSEY GULCH-SYCAMORE GULCH
GREENLEE COUNTY
B.P.R. REGION 7
STATE ARIZ.
PROJECT NO. RS-218(17)
SHEET NO. 8
TOTAL SHEETS
AS BUILT
MATERIALS DIVISION
SOIL PROFILE
B.M.#31-210' Lt. Sta. 309+00
Brass Cap Stamp AHD P&M
114 V. Elev. 3571.96
34' Roadway
B.M.#32-100' Lt. Sta. 319+30
5/8" Iron Pin & Gd. Elev. 3676.05
D.A. Rt. 0.055 □Mi. C=1.2 Req'd. 18.5□'
D.A. Rt. 0.004 □Mi. C=1, Req'd. 2.0□'
D.A. Rt. 0.003 □Mi. C=1, Req'd. 1.7□'
D.A. Rt. 0.011 □Mi. C=1.2, Req'd. 4.8□'
D.A. Rt. 0.005 □Mi. C=1.2, Req'd. 4.0□'
D.A. Rt. 1.207 □Mi. C=1.2, Req'd. 175.0□'
Q25=2196 c.f.s.
HW=3654.90
64-22662 10' Lt. 0-1 L.L. 40 P.I. 11 -1/4 25 -8 18 -40 10 -200 3
400' V.C.
New 3'x1'-6"x385' Ditch Lt. 35 C.Y. Drain. Excav.
CLAY COATED ROCK
LEDGE ROCK
64-22661 0-1' L.L. 46 P.I. 24 -1/4 32 -8 25 -40 16 -200 11
CLAY + ROCK
STA. 310+00
BEGIN PROJ. RS-218(17)
End PROJ. S-218(15)
+2.7083%
Future Finished ℄ Grade
+1.4167%
Exist. Ground Line
Invert Elevations
Inlet Elev. 3679.00
Outlet Elev. 3490.80
Invert Elevations
Inlet Elev. 3681.00
Outlet Elev. 3636.00
64-22663 40' Lt. 0-1 L.L. 40 P.I. 10 -1/4 11 -8 7 -40 3 -200 1
64-22664 45' Lt. 0-1 L.L. 42 P.I. 14 -1/4 8 -8 5 -40 2 -200 1
CLAY COATED ROCK
800' V.C.
S-218-511
DUNCAN-ALPINE HWY.
DORSEY GULCH-SYCAMORE GULCH
STA. 310+00 TO 405+49.84
Invert Elevations
Inlet Elev. 3630.00
Outlet Elev. 3586.30
+47-New 60"x238' Pipe Culv. Spec. Hdw'l. Rt., See Detail 5 C.Y. Str. Excav. 5 C.Y. Drain. Excav. 665 C.Y. Spec. Backfill
+54-New 36"x212' Pipe Culv. Sk. 15° Rt. New Str. Hdw'l. Rt. 2.63 C.Y. A Conc. 105 #Reinf. Steel 5 C.Y. Str. Excav. 5 C.Y. Drain. Excav. 230 C.Y. Spec. Backfill
+05-New 36"x138' Pipe Culv. New Str. Hdw'l. Rt. 2.63 C.Y. A Conc. 105 #Reinf. Steel 5 C.Y. Str. Excav. 5 C.Y. Drain. Excav. 165 C.Y. Spec. Backfill
20' Cut Ditch Rt.
3/4:1 Slope Rt.
1/2:1 Slope Lt. & Rt.
99,269.5 C.Y.-0.106 Mi.=10,522.6 C.Y. M.O.H.
From Sta. 333+73.4
Excav. 3,615.8
15% Swell 542.4
Haul In. 99,269.5
14,890.4
118,318.1
Excav. 85,774.1
15% Swell 12,866.1
Excav. 40,819.8
Swell 4,082.0
143,542.0
B.T.B. 2"
A.B. 2"
S.M. 12"
B.T.B. 2"
A.B. 2"
S.M. 9"
Finished Plans-Safford Office-F.S.-G.K.-B.B.-C.F.- 1/69
1 of 4

DUNCAN-ALPINE HWY.
DORSEY GULCH-SYCAMORE GULCH
GREENLEE COUNTY

B.P.R. REGION	STATE	PROJECT NO.	SHEET NO.	TOTAL SHEETS	AS BUILT
7	ARIZ.	RS-218(17)	10		

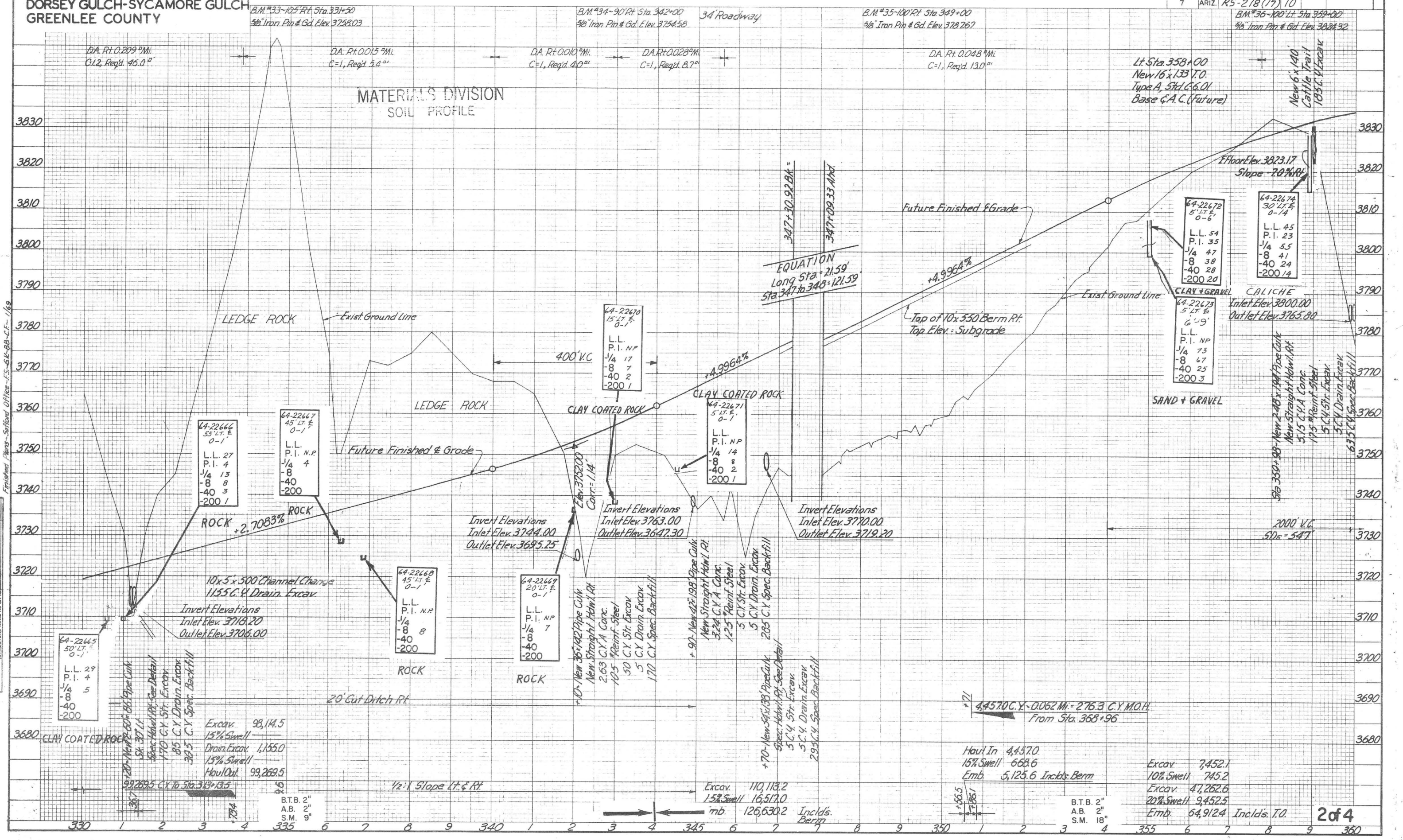

DUNCAN-ALPINE HWY.
DORSEY GULCH-SYCAMORE GULCH
GREENLEE COUNTY

B.P.R. REGION	STATE	PROJECT NO.	SHEET NO.	TOTAL SHEETS	AS BUILT
7	ARIZ	RS-218(17)	12		

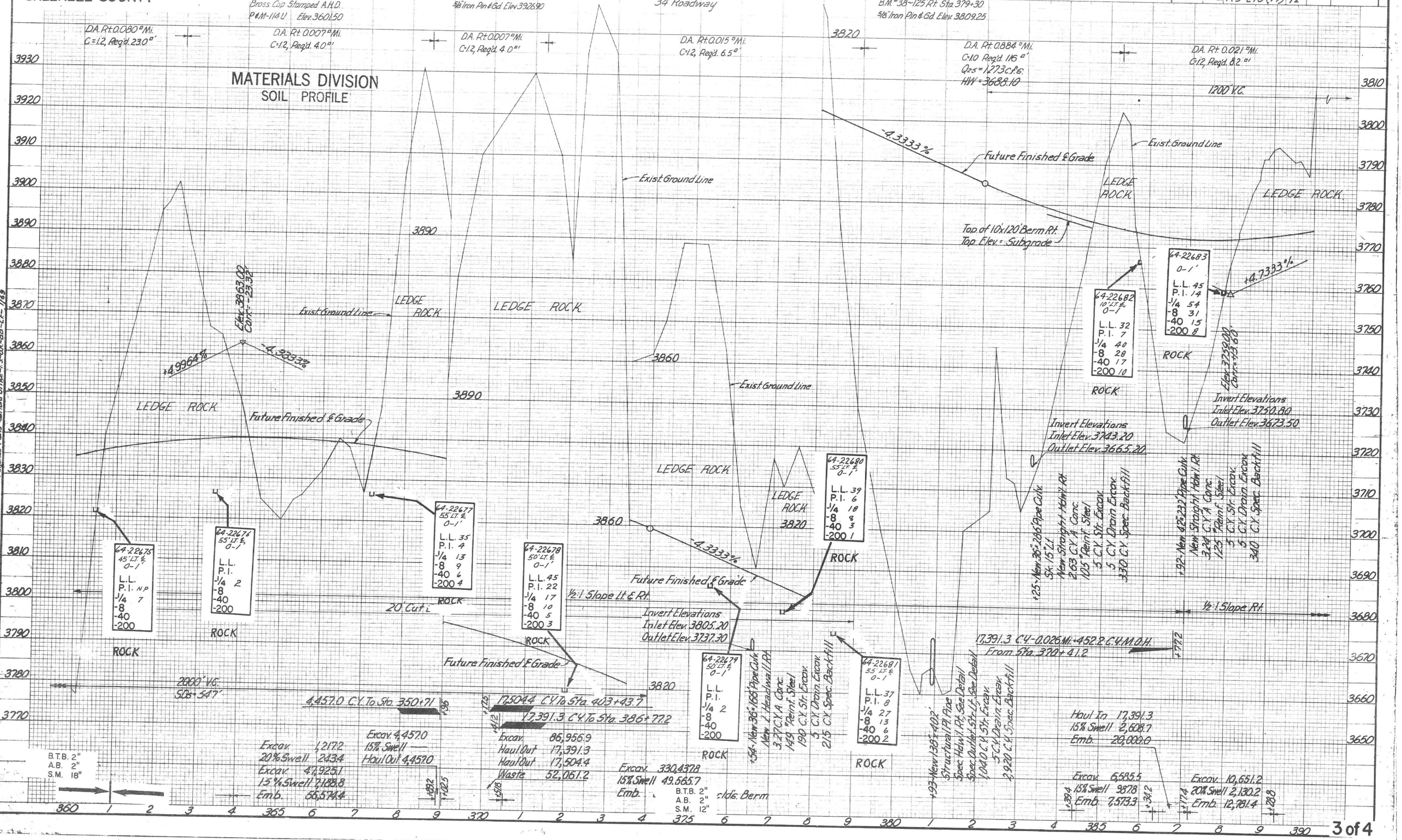

DUNCAN-ALPINE HWY.
DORSEY GULCH-SYCAMORE GULCH
GREENLEE COUNTY

BPR REGION	STATE	PROJECT NO.	SHEET NO.	TOTAL SHEETS	AS BUILT
7	ARIZ.	RS-218(17)	14		

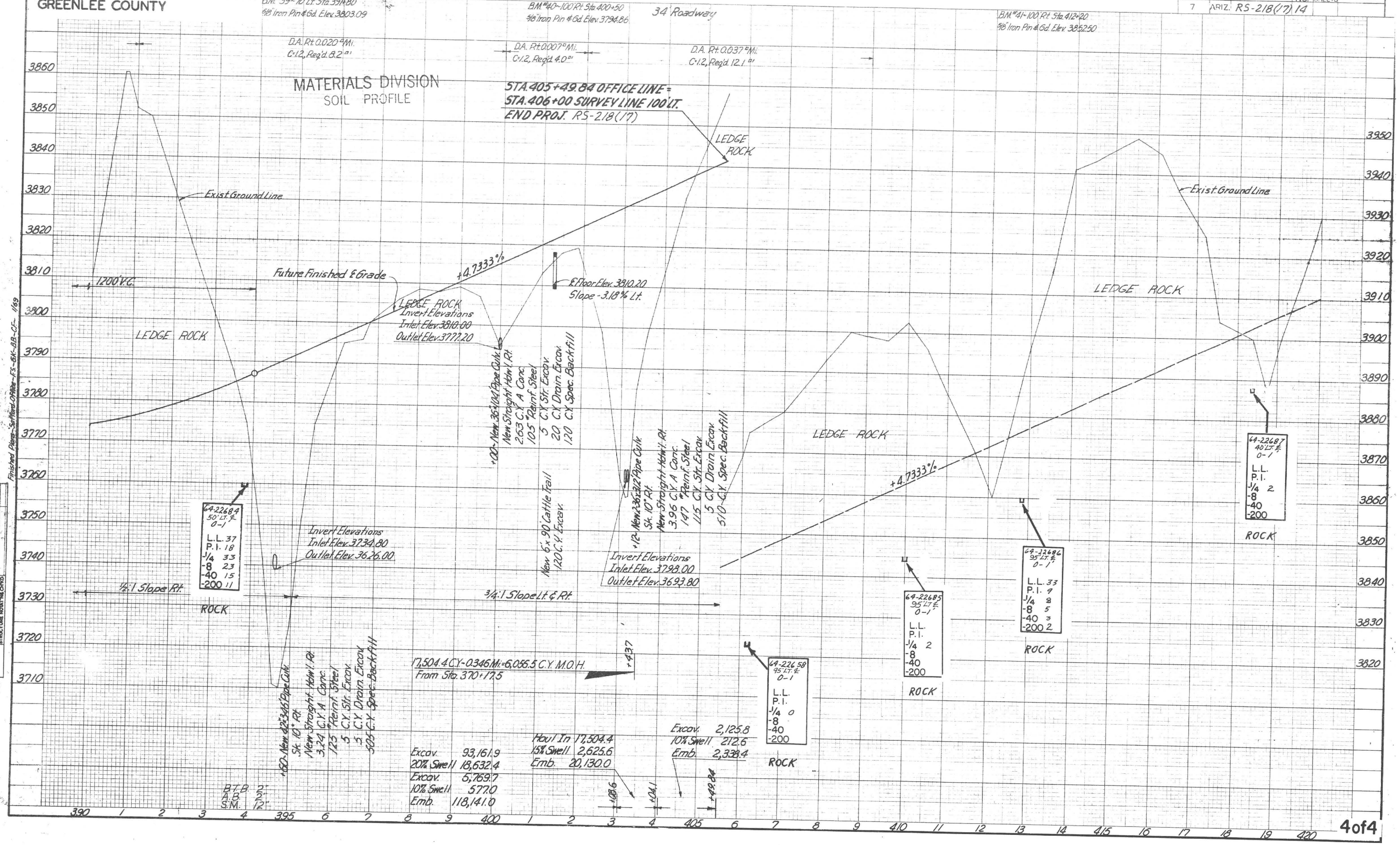

4 of 4