CONTACT INFORMATION
Mining Records Curator
Arizona Geological Survey
416 W. Congress St., Suite 100
Tucson, Arizona 85701
602-771-1601
http://www.azgs.az.gov
inquiries@azgs.az.gov

The following file is part of the Grover Heinrichs Mining Collection

ACCESS STATEMENT

These digitized collections are accessible for purposes of education and research. We have indicated what we know about copyright and rights of privacy, publicity, or trademark. Due to the nature of archival collections, we are not always able to identify this information. We are eager to hear from any rights owners, so that we may obtain accurate information. Upon request, we will remove material from public view while we address a rights issue.

CONSTRAINTS STATEMENT

The Arizona Geological Survey does not claim to control all rights for all materials in its collection. These rights include, but are not limited to: copyright, privacy rights, and cultural protection rights. The User hereby assumes all responsibility for obtaining any rights to use the material in excess of "fair use."

The Survey makes no intellectual property claims to the products created by individual authors in the manuscript collections, except when the author deeded those rights to the Survey or when those authors were employed by the State of Arizona and created intellectual products as a function of their official duties. The Survey does maintain property rights to the physical and digital representations of the works.

QUALITY STATEMENT

The Arizona Geological Survey is not responsible for the accuracy of the records, information, or opinions that may be contained in the files. The Survey collects, catalogs, and archives data on mineral properties regardless of its views of the veracity or accuracy of those data.

The Mackay School of Mines is one of the several colleges of the University of Nevada. The School consists of three divisions: the academic Departments of Instruction, the Nevada Bureau of Mines, and the Nevada Mining Analytical Laboratory. The Mackay School of Mines is thus the State of Nevada's educational research and public service center for the mineral industry.

The Nevada Bureau of Mines and the Nevada Mining Analytical Laboratory serve the public as State agencies to assist in developing Nevada's mineral resources. They identify, analyze, and evaluate minerals, rocks, and ores found in Nevada. They conduct field studies on Nevada geology and mineral deposits, including metallic and industrial minerals as well as oil and gas. They pursue laboratory and library research in mineral beneficiation, extractive metallurgy, and economic problems connected with the mineral industry of Nevada.

For information concerning the mineral resources and mineral industry of Nevada, write to: Director, Nevada Bureau of Mines, University of Nevada, Reno, Nevada.

HYDROMETALLURGY—MERCURY ORE

NEVADA BUREAU OF MINES REPORT 5

NEVADA BUREAU OF MINES

VERNON E. SCHEID, DIRECTOR

REPORT 5

STUDIES IN THE HYDROMETALLURGY OF MERCURY SULFIDE ORES

By JOHN N. BUTLER

MACKAY SCHOOL OF MINES
UNIVERSITY OF NEVADA

1963

NEVADA BUREAU OF MINES

Vernon E. Scheid, Director

REPORT 5

STUDIES IN THE HYDROMETALLURGY OF MERCURY SULFIDE ORES

By

John N. Butler

Mackay School of Mines
University of Nevada
Reno, Nevada
1963

REFERENCES

Allen, E. T., and Crenshaw, J. L., 1912, The sulfides of zinc, cadmium and mercury; their crystalline forms and genetic conditions: Am. Jour. Sci., v. 34, p. 341-396.

Becker, G. F., 1888, Geology of the quicksilver deposits of the Pacific slope: U. S. Geol. Survey Mon. 13, p. 419-437.

Bradley, W. W., 1918, Quicksilver resources of California: Bull. 78, California State Mining Bureau, p. 321-328.

Coe, H. S., and Clevenger, G. H., 1917, Methods for determining the capacities of slime-settling tanks: Am. Inst. Mining Engineers Trans., v. 55, p. 356-384.

Dickson, F. W., and Tunell, George, 1958, Equilibria of red HgS (cinnabar) and black HgS (metacinnabar) and their saturated solutions in the systems $HgS-Na_2S-H_2O$ and $HgS-Na_2S-Na_2O-H_2O$ from 25° C to 75° C at 1 atmosphere pressure: Am. Jour. Sci., v. 256, p. 654-679.

Donovan, W., 1921, Thornhill's sodium-sulfide process for the recovery of mercury, as applied to cinnabar-ore from Puhipuhi: New Zealand Jour. Sci. and Technology, v. 4, p. 129-134.

Kirchoff, G. S. C., 1799, Allg. Jour. der Chemie: A. N. Scherer, v. 2, p. 290.

Oberbillig, Ernest, Fyfe, James, Aitkenhead, William, and Jaekel, John, 1958, Holly Minerals' new three-step process for impure mercury ores: Mining World, v. 20, no. 2, p. 53-56.

Schnabel, Carl, and Louis, Henry, 1907, Handbook of metallurgy: New York, The Macmillan Co., 2nd ed., v. 2, p. 329-443.

Taggart, A. F., 1948, Handbook of mineral dressing: New York, John Wiley & Sons, sec. 19, p. 167-168.

Thornhill, E. B., 1915, Wet method of mercury extraction: Min. and Sci. Press, v. 110, p. 873-874.

____, 1915, Recovery of mercury from amalgamation tailing: Am. Inst. Mining Engineers Trans., v. 52, p. 165-170; also (abs.): 1915, Min. and Sci. Press, v. 111, p. 211-212.

Town, J. W., Link, R. F., and Stickney, W. A., 1961, Caustic sulfide leaching of mercury products: U. S. Bur. of Mines Rept. Inv. 5748.

STATE OF NEVADA

Grant Sawyer, Governor

UNIVERSITY OF NEVADA

Charles J. Armstrong, President

MACKAY SCHOOL OF MINES

Vernon E. Scheid, Dean

NEVADA BUREAU OF MINES

NEVADA MINING ANALYTICAL LABORATORY

Vernon E. Scheid, Director

Stanley E. Jerome, Associate Director

For sale by the Nevada Bureau of Mines, University of Nevada, Reno, Nevada.
Price, 75 cents.

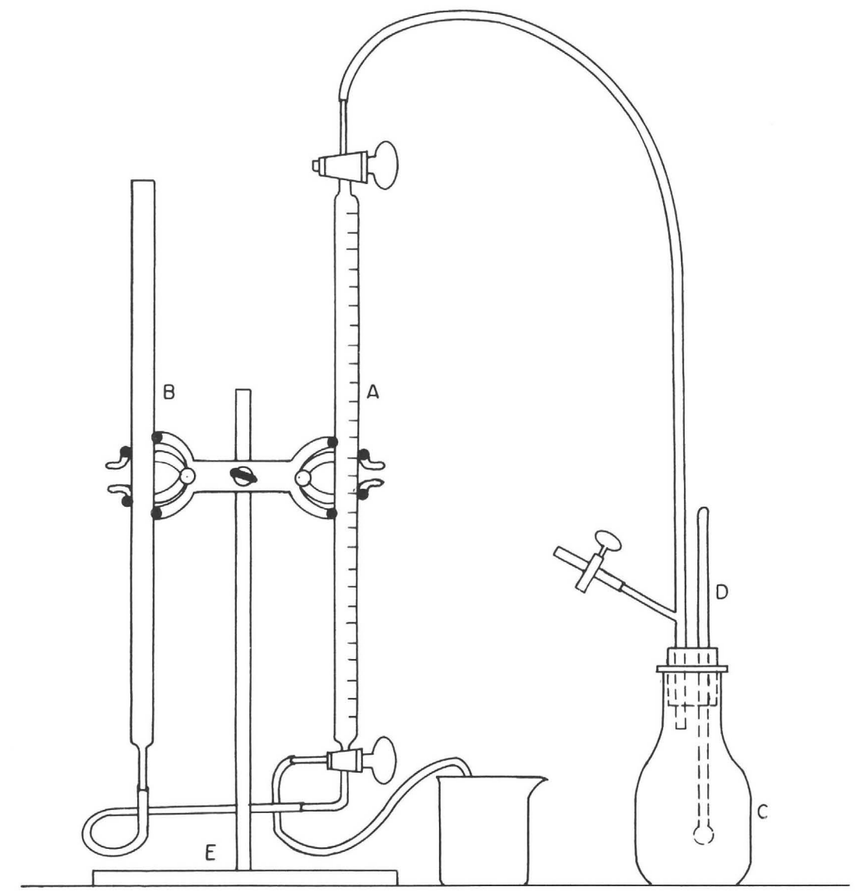

Figure 7. Hydrogen sulfide gas determination apparatus.

dilute (2 percent) HCl. Transfer precipitate to filter paper and wash on filter five times with hot water. Dry paper and precipitate, ignite to white ash and weigh as $BaSO_4$. To calculate the weight of Na_2S, multiply weight of $BaSO_4$ by 0.3344. To obtain the free Na_2S in the test solution, from the mercury assay of the solution deduct from the total Na_2S value the Na_2S combined with $HgS \cdot Na_2S$.

RAPID PLANT METHOD FOR SODIUM SULFIDE DETERMINATION

For plant control, a simple determination of sodium sulfide (Na_2S) which can be made by an operator is necessary. A method was developed during this work which uses a gas burette to determine the volume of H_2S generated when a sample of solution is acidified with HCl. With a little experience this determination can be made in about 10 minutes.

Equipment required (fig. 7) is as follows:

A. 100 ml Hempel graduated gas burette
B. 100 ml leveling tube
C. 500 ml Erlenmeyer flask with ridge across the bottom (see B. K. H. Co. Cat. No. 63, Item 29173)
D. Thermometer, graduated from 0° to 100° C
E. Burette stand
F. Miscellaneous: barometer, glass "Y" tube, rubber stopper, tubing clamp

Fill gas burette to zero mark by adding water to top of leveling tube. Carefully adjust height of leveling tube in burette holder so that water in Hempel burette is exactly at 0 ml. Pipette a sample of the solution to be analyzed so that H_2S evolved will be somewhat less than 50 ml (on solution containing 4 percent Na_2S, a 5 ml sample is used). Carefully drain the pipette into one side of the split-bottom flask. Pipette into the other side of the flask an excess of 50 percent HCl. Care must be taken to prevent any mixing of solution and acid before connecting to the gas burette. With the tubing clamp on the glass "Y" in open position, insert rubber stopper tightly in top of the flask. Close stopcock between burette and leveling tube and drain leveling tube to within 1 inch of bottom of tube. Close tubing clamp on glass "Y", check zero reading on Hempel burette, and open stopcock between burette and leveling tube. Shake flask vigorously to mix solution and acid completely, and continue shaking until water in the gas burette remains at a steady level. Uncouple leveling tube from the burette stand and, holding it beside the gas burette, move up or down until water level is the same in the gas burette and the leveling tube. Read ml of H_2S generated. Take temperature reading of the thermometer in the Erlenmeyer flask and a barometer reading. Correct gas volume to standard conditions and convert to Na_2S from the equation $Na_2S + 2\ HCl = H_2S + 2\ NaCl$.

CONTENTS

	Page
Abstract	1
Introduction	1
Acknowledgements	2
Historical background	3
Chemical reactions	4
Ores tested	6
No. 1. High-grade chalcedony	6
No. 2. Low-grade chalcedony	6
No. 3. High-grade opalite	6
No. 4. Low-grade opalite	6
No. 5. Low-grade opalite	6
No. 6. High-grade composite	6
No. 7. Siliceous sinter	7
No. 8. Opalite	7
No. 9. Siliceous sinter	7
No. 10. Siliceous sinter	7
Laboratory testing of ore samples	7
Crushing and sampling	8
Petrographic studies	8
Assay-screen analyses	11
Grinding tests	13
Leaching tests	15
Agitation leaching	15
Percolation leaching	23
Settling tests	25
Filtering tests	26
Precipitation of mercury	28
Precipitation on aluminum shot	29
Precipitation with 20-mesh granulated aluminum	30
Precipitation with aluminum powder	34
Precipitation with aluminum sheet	38
Batch precipitation tests	38
Continuous precipitation tests	39
Comparison between aluminum and electrolytic precipitation	44
Effect of sodium hydroxide concentration on leaching of mercury sulfide	45
Estimated costs	49
Conclusions	50
Appendix (analytical procedures)	53
Determination of mercury	53
Ores	53
Process solutions	55
Determination of sodium hydroxide and sodium sulfide	55
Rapid plant method for sodium sulfide determination	56
References	58

ILLUSTRATIONS

			Page
Figure	1.	Effect of intensity of agitation and amount of aluminum on mercury precipitation	31
	2.	Apparatus used for continuous precipitation of mercury on aluminum sheet	40
	3.	Comparison between electrolytic precipitation and precipitation with metallic aluminum	46
	4.	Effect of sodium hydroxide concentration on rate of mercury extraction	48
	5.	Suggested flowsheet for treatment of cinnabar ore	52
	6.	Electric test tube furnace	54
	7.	Hydrogen sulfide gas determination apparatus	57

TABLES

Table	1.	Assay-screen analysis of sample No. 1.	11
	2.	Assay-screen analysis of sample No. 3.	12
	3.	Assay-screen analysis of sample No. 5.	12
	4.	Assay-screen analysis of sample No. 6.	13
	5.	Assay-screen analysis of pulp from wet grinding	15
	6.	Agitation leaching of sample No. 1.	16
	7.	Agitation leaching of sample No. 2.	17
	8.	Agitation leaching of sample No. 3.	19
	9.	Agitation leaching of sample No. 4.	19
	10.	Agitation leaching of sample No. 5.	20
	11.	Agitation leaching of sample No. 6.	21
	12.	Agitation leaching of sample No. 7.	22
	13.	Agitation leaching of samples Nos. 8, 9, and 10.	23
	14.	Results of percolation leaching tests	24
	15.	Results of filtration tests	27
	16.	Precipitation of mercury on aluminum shot	29
	17.	Precipitation of mercury from low-grade solution with 20-mesh aluminum	30
	18.	Precipitation of mercury from high-grade solution with 20-mesh aluminum	32
	19.	Mercury precipitation, regeneration of sodium sulfide, and consumption of sodium hydroxide	33
	20.	Precipitation of mercury with aluminum powder, low-speed agitation	34
	21.	Precipitation of mercury with aluminum powder, high-speed agitation	35
	22.	Precipitation of mercury by continuous feed of aluminum powder	36
	23.	Effect of excess aluminum and sodium hydroxide on mercury sulfide formation	36

$Fe_2(SO_4)_3$ and titrate with a standard solution of potassium thiocyanide (KSCN). The end point is a light straw color.

Process Solutions

To determine mercury content in process solution, pipette 20 to 100 ml of the test solution (depending on mercury content) into a 400 ml beaker and dilute to 250 ml. Carefully add concentrated hydrochloric acid (HCl) until precipitation of mercury sulfide (HgS) is complete. On pregnant solutions 25 ml is usually sufficient; on low-grade solutions less HCl is required. Cover with a watch glass and boil for about 10 minutes or until the black HgS is coagulated. Filter on a hard filter paper and wash at least three times with hot water. Dry the precipitate and filter paper at not over 95° C. Carefully remove precipitate from filter paper by scraping with a spatula and brushing with a hard brush. Then pulverize the precipitate with a spatula on a piece of plate glass, or pulverize in an agate mortar. Mix thoroughly and weigh. Then weigh 50 mg of the precipitate, mix with 3 grams of flux (same as for ores) on a white, glazed paper and transfer to a 16- X 150-mm test tube. Continue with procedure as described under "Ores" above.

It is usually advisable to make up two standard KSCN solutions, one containing 0.250 gram KSCN per liter, 1 cc of which equals 0.5 lb mercury per ton on a 1-gram sample; the other containing 1.000 gram KSCN per liter. Titrate mercury from ores with the weak solution and mercury from precipitation of solutions with the strong solution.

Dissolve a weighed amount (approximately 0.5 g) of C. P. mercury in nitric acid and make up to 500 ml with water in a volumetric flask. Standardize the KSCN solution against 20 ml of this solution, using ferric sulfate as indicator.

DETERMINATION OF SODIUM HYDROXIDE AND SODIUM SULFIDE

Sodium hydroxide and sodium sulfide can be determined from the same sample. Pipette 10 ml of test solution into a 100 ml beaker and first determine the NaOH content. Add 25 ml water and an excess of hydrogen peroxide (33 percent diluted with twice its volume of water). Black HgS is precipitated and the Na_2S is converted to Na_2SO_4. Solution should be tested for complete conversion of Na_2S with sodium nitroprusside on a spot plate; any purple color indicates presence of Na_2S. Add additional hydrogen peroxide until no purple color is observed. Boil for 5 minutes, filter into a 400 ml beaker and wash five to seven times with hot water. Dilute to 200 ml with cold water and cool the solution in a water bath. Titrate with standard HCl solution, using phenolphthalein as indicator.

To determine total Na_2S on the test solution made neutral as above, add 3 ml concentrated HCl, dilute to 300 ml, bring to boiling and add 25 ml of 10 percent barium chloride ($BaCl_2$) solution. Simmer the solution for about 5 minutes, allow the $BaSO_4$ to settle and decant off solution through an ashless filter paper. Wash four times with hot water in the beaker by decantation, followed by one wash with

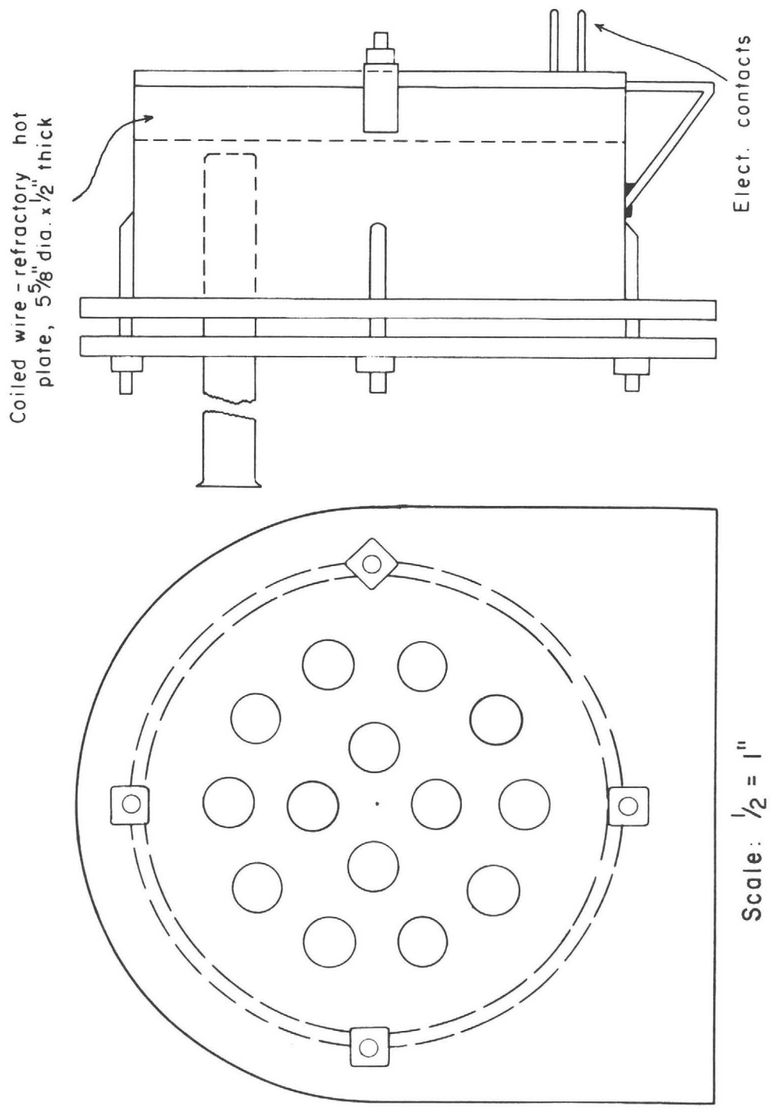

Figure 6. Electric test tube furnace.

	Page
24. Simulation of Merrill-Crowe method by precipitation in 50-gram flotation machine	37
25. Batch precipitation of mercury on aluminum sheet	38
26. Continuous precipitation of mercury on aluminum sheet	41
27. Continuous precipitation of recycled solution	43
28. Effect of sodium hydroxide concentration on dissolution of mercury from cinnabar ore	47

Mercury as amalgam will become a circulating plant inventory. The small amount of mercury sulfide formed can be retorted periodically.

From the test results reported, a suggested flowsheet (fig. 5) has been prepared. The author emphasizes, however, that anyone considering adoption of this process should have complete laboratory tests run on representative samples of the ore or ores which they will be processing. Tests should cover fineness of grind, time of agitation, thickening, filtering, and precipitation. In addition to obtaining data on extraction and recovery of mercury, consumption of sodium sulfide, sodium hydroxide, and aluinum should be determined for each ore to be processed.

APPENDIX

(ANALYTICAL PROCEDURES)

DETERMINATION OF MERCURY

Ores

To determine the mercury content in ores, weigh a 1-gram sample (or one of such weight that it contains not more than 0.015 gram mercury). Mix with 3 grams of flux (made up of 1 part CaO and 1 part CuO) on a piece of white, glazed paper. Then transfer this carefully to a 16- X 150-mm test tube ("Kimble" brand soft glass), using a short-stemmed funnel. Cover the charge in test tube with 1 to 2 grams of flux. Make a ball of fine iron wool to fit the inside of the test tube and insert this so that it is about 1/8 inch from the top of the charge and cover. The iron wool cleans any ore and flux that may have adhered to the inside of the test tube, and also acts as an absorbent for any sulfur which may volatilize. Heat the charge by holding it in a horizontal position over a Bunsen burner, or by placing it in an electric test tube furnace such as the simple model designed for this study (fig 6). Maintain at temperature of 500° to 550°C for 25 to 30 minutes. Mercury in the sample is distilled and condenses on the cool upper part of the test tube. Remove test tube from heat, and while hot pass a wet swab around the outside just above the iron wool plug. This will crack the glass and the bottom end can then be knocked off by tapping lightly.

Place the upper end of the test tube, which holds the condensed mercury, in a 100 ml beaker. Mercury is dissolved from the inside of the test tube with about 10 ml of boiling, concentrated nitric acid, by allowing the acid to run down the inside of the test tube while rotating it slowly with the fingers. A 10-ml pipette and pipettor can be used for this purpose. Wash the test tube with a fine stream of water, using care to wash the lower end where it has been in the beaker. Cool the beaker and contents to room temperature. Add an excess of strong potassium permanganate ($KMnO_4$) solution until a deep red color does not fade. Let the solution stand for a few minutes, then neutralize the excess $KMnO_4$ by the careful addition of one or more drops of dilute (3 percent) hydrogen peroxide. Add about 1 ml of 10 percent solution of ferric sulfate,

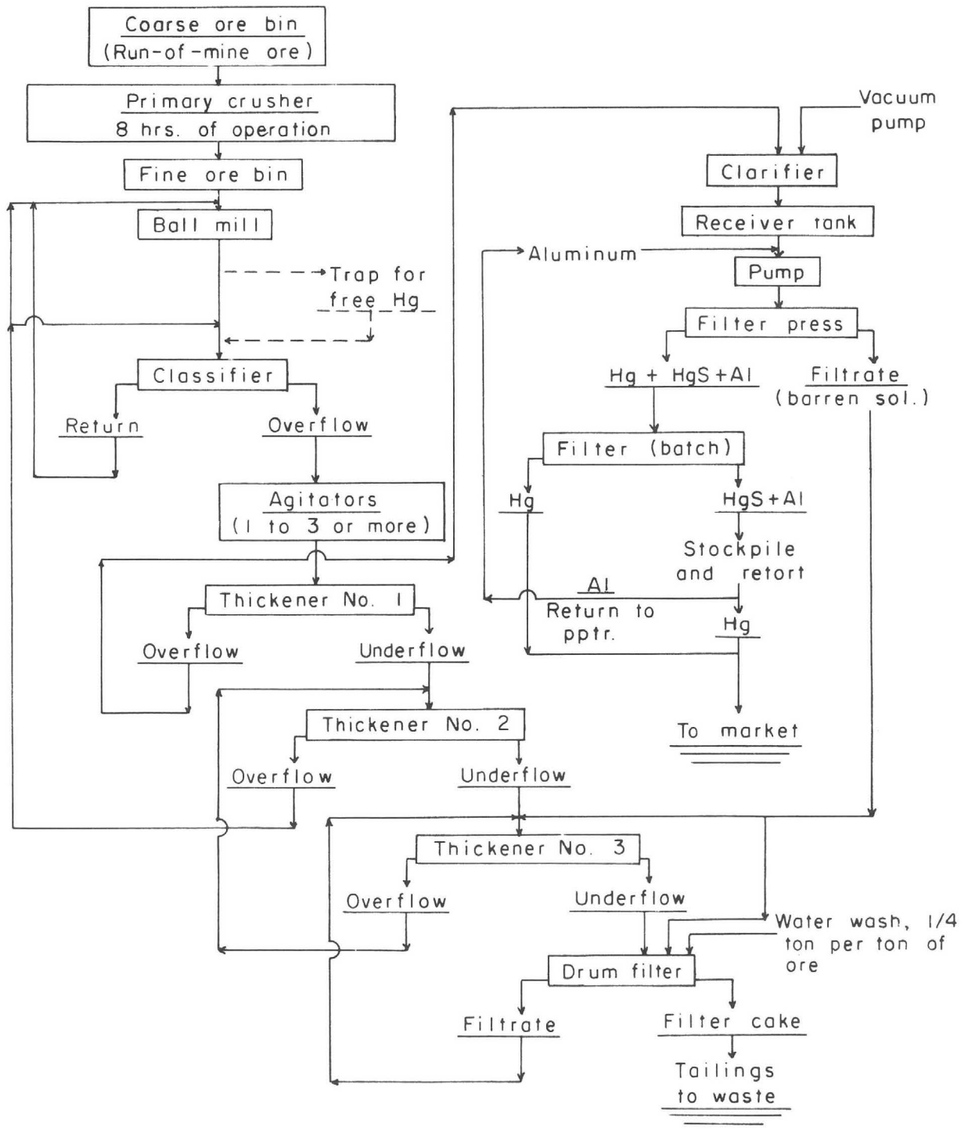

Figure 5. Suggested flowsheet for treatment of cinnabar ore.

STUDIES IN THE HYDROMETALLURGY OF MERCURY SULFIDE ORES

By JOHN N. BUTLER

ABSTRACT

Mercury can be recovered from mercury sulfide by first dissolving the sulfide in a sodium sulfide-sodium hydroxide solution, and then precipitating it in the form of an adherant coating upon introduced metallic aluminum.

The chemistry of the process here described has been known for many years, and although the process has been applied in the recovery of mercury from a cinnabar flotation concentrate, it has never been applied in the commercial extraction of mercury from cinnabar ores.

The process has considerable merit. It is relatively simple, paralleling in physical respects the recovery of gold and silver by cyanidation. For a number of different types and grades of cinnabar ores tested for leachability, high mercury extraction from 93 to 99 percent was obtained. Investigations were made on the variables of time, intensity of agitation, and fineness of grind. Contact time required with sufficient agitation was 4 hours. The usual grind required was minus 65 mesh, although where cinnabar occurs in a coarsely crystalline state and is readily liberated, a 10-mesh grind may be sufficient.

Optimum conditions for precipitation with aluminum metal were determined on solutions containing various concentrations of mercury. Four hours of contact (agitation) time are normally required to obtain complete (99.9 percent) precipitation of the mercury from solution. A small amount of mercury sulfide is formed during precipitation, but with proper operation this will amount to no more than one percent of the metallic mercury precipitated.

Estimated costs are about the same or somewhat less than the cost of furnacing mercury ores, depending on the ore being treated and on local conditions. No health hazards exist in this process, as compared to furnacing. Mercury recoveries generally are estimated to be higher than recoveries obtained by furnacing, especially in small operations.

INTRODUCTION

In Nevada and adjoining States there are numerous deposits of mercury ore; the chief mercury mineral is cinnabar, the red mercury sulfide. These deposits vary widely

in size and in percentages of contained mercury. A number of the larger deposits have been developed, and a large part of the domestic production of mercury has come from this area. Recovery of mercury from these ores has been accomplished by furnacing methods. Many other deposits remain undeveloped because they are either too small or too low in grade to warrant the cost of a furnacing plant.

Although most types of hydrometallurgical plants cost less to install and are cheaper to operate than pyrometallurgical plants, this is not necessarily true in furnacing mercury ores, since this operation is carried on at a relatively low temperature. Investigations into the possible use of wet methods for recovering mercury therefore appeared to be a worthwhile project in the development of the mineral industry of Nevada and adjoining areas. Wet methods of extracting mercury present a definite advantage over distillation as, for instance, the elimination of health hazards due to salivation. In addition, on small-scale operations, leaching and chemical precipitation should present fewer operating difficulties and give higher mercury recoveries than furnacing or retorting.

Several small-scale leaching tests were run in the Mackay School of Mines laboratories about six years ago. The several types of cinnabar ores tested were readily amenable to treatment with sodium sulfide - sodium hydroxide solutions, with resultant high extractions of mercury. Certain operating difficulties were observed, but for the most part these could be eliminated by maintainence of proper conditions. Electrolytic precipitation of the mercury from these solutions, however, was not satisfactory; instead of obtaining mercury metal, large quantities of black mud were formed. Upon retorting, this proved to be primarily black mercury sulfide.

Mr. James R. Fyfe, metallurgical engineer for the General Minerals Corporation of Denver, Colo., who had had laboratory and plant operating experience with the leaching of cinnabar concentrates, contacted the Mackay School of Mines in regard to setting up a project on the hydrometallurgy of cinnabar ores. Late in 1960 such a co-operative research program between the School and General Minerals Corp. was started. The object of the program was to determine optimum operating conditions and estimated costs for the recovery of mercury from cinnabar ores. Leaching and precipitation tests were started on a number of cinnabar ores selected by the company, mostly from Nevada.

ACKNOWLEDGEMENTS

Grateful acknowledgement is made for the financial assistance furnished by the General Minerals Corporation, and for the services of Mr. James Fyfe, who worked in the School laboratories full time for over six months. His previous experience in both laboratory test work and plant operation on this process has been of inestimable value.

Dr. D. B. Slemmons, associate professor of geology, Mackay School of Mines, made the petrographic studies of samples submitted. This work was of great value in planning tests and deciding on necessary fineness of grind.

imum economic extraction of mercury is a problem to be worked out on the specific ore under consideration.

Percolation leaching was not too successful. A limited number of tests were run by this method, and although no blinding of the bed occurred, very little dissolution of mercury took place during 24 hours of leaching time. It is believed that black mercury sulfide is reprecipitated on the surface of cinnabar, following decrease in concentration of free sodium sulfide in surface areas. Because of the long contact time required for percolation leaching, the consumption of sodium sulfide and sodium hydroxide is considerably higher than for agitation leaching. This is due to the action of sodium sulfide on silica and iron oxides in the ore, which cause the formation of sodium silicates and iron sulfides.

Mercury metal is not soluble in sodium sulfide solution. Therefore, if native mercury metal occurs in a cinnabar ore, some means to trap this free metal must be provided in plant plans. Hydraulic traps or jigs are recommended in the circuit between the ball mill and the classifier.

Grinding, thickening, and filtration tests indicate that no major difficulties may be expected in these operations in a mill circuit. Because of the rapidity with which cinnabar dissolves in sodium sulfide solution, approximately 90 percent of the mercury in the feed will be dissolved during grinding. In plant operation, using a closed ball mill-classifier circuit, it is possible that almost complete dissolution of cinnabar will take place, which would eliminate the need for installing agitators.

Precipitation of mercury from sodium sulfide solutions presented no difficulty. As shown in this report, aluminum metal was used as the precipitant in all cases. Regardless of the type used, if a sufficient amount of aluminum was added to the solution, and sufficient agitation time given, 99.0 to 99.9 percent of the mercury was precipitated. In the batch laboratory tests, mechanical agitation for four hours with 20-mesh granulated aluminum gave the most complete precipitation of mercury. Also, less black mercury sulfide was formed.

In plant operation, a continuous precipitation operation is preferable to batch precipitation, primarily because of the saving in labor. Laboratory tests designed to approximate the Merrill-Crowe precipitation process gave 99.6 percent precipitation of mercury. In this process, aluminum powder was placed in contact with solution for 3 minutes under intensive agitation similar to that produced if the aluminum powder and solution were pumped through a high-speed centrifugal pump. This method of recovery, however, produced greater amounts of both undesirable floured mercury and black mercury sulfide.

In the precipitation of mercury with aluminum metal, three products are formed—liquid mercury metal, mercury amalgamated with aluminum, and black mercury sulfide. The liquid metal, after straining through chamois or a tight-weave canvas, is ready to be placed in flasks and marketed. The mercury-aluminum amalgam can be either returned to the precipitation circuit or retorted. Tests indicated that mercury precipitation was more rapid on amalgamated aluminum than on fresh, nonamalgamated aluminum. Therefore, the recommended procedure is to return this product to the circuit.

Sodium sulfide	0.52 lb @ 7 cents per lb	$0.036
Sodium hydroxide	3.06 lb @ 6 cents per lb	0.184
Aluminum	0.35 lb @ 15 cents per lb	0.053
	Total	$0.273

An estimated cost per ton of ore, on the basis of ore assaying 4 pounds of mercury per ton, is as follows:

Reagents, $0.27 X 4	$1.08
Crushing	0.50
Grinding and classifying	1.25
Thickening and filtration	.30
Refining	.10
Heat	.10
Repairs, maintenance, etc.	.20
Subtotal	$3.53
Miscellaneous and overhead (20 percent of direct costs)	.71
Total	$4.24

In addition to these estimated costs there will be the cost of water for plant operation. On the basis of 25 tons of new make-up water per 100 tons of ore treated, cost of water is estimated at 10 cents to 20 cents per ton of ore, depending upon plant location with regard to a source of water.

The above figures are estimates only, and consumption of reagents will probably not vary directly with mercury content. This is indicated in table 13, where the ore which is highest in mercury content used the least amount of sodium sulfide per pound of mercury dissolved. The figures given are conservative, and for many ores consumption of reagents may be lower.

CONCLUSIONS

Laboratory tests, as given in this report, show that mercury can be successfully recovered from a number of types and grades of cinnabar ores by grinding them to minus 65 mesh, leaching them in a solution containing 1 percent sodium hydroxide and 4 percent sodium sulfide, and then precipitating the mercury from the leach solution by addition of metallic aluminum.

Although with most samples tested it was necessary to grind the ore to minus 65 mesh to assure satisfactory recovery, grinding to minus 10 mesh may be sufficient for coarsely crystalline cinnabar.

Both percolation and agitation leaching tests were conducted to determine the effect of increased contact of the leach solution and ore. In the more than 70 agitation leaching tests, extraction of mercury was over 95 percent in all tests where the grind was to minus 65 mesh and agitation time was four hours. In some such tests mercury extraction was over 99 percent. Because no two ores are quite the same, determination of a balance between fineness of grind and agitation time to give max-

HISTORICAL BACKGROUND

Mercury sulfide is readily soluble in alkaline sulfide solutions, forming the double sulfide, sodium sulfide - mercury sulfide. This fact was noted by Kirchoff (1799) in his description of the preparation of vermilion. Considerable research has been done in the past to determine the source and nature of the solutions which brought about the formation of cinnabar ore bodies. Becker (1888) reviewed the literature relative to the solubility of mercury sulfide in alkali sulfide solutions and also described a series of experiments made in his laboratory. Allen and Crenshaw (1912) worked on various sulfides, including mercury. More recent work on the origin of cinnabar deposits has been done by Dickson and Tunell (1958). All of the above work primarily was concerned with the deposition of cinnabar in natural deposits.

Schnabel and Louis (1907), in discussing proposed wet methods for extracting mercury from its ores, mention formation of the double sulfide. In 1918, Bradley published results of a number of laboratory experiments which he had made on leaching of various samples containing cinnabar. Using 10 percent sodium sulfide and 0.5 percent sodium hydroxide solutions in a number of tests, he obtained the dissolution of over 90 percent of the mercury after 20 minutes of agitation.

The first recorded practical application of a hydrometallurgical method of recovering mercury was described by Thornhill in 1915. This was not, however, a recovery of mercury from cinnabar ores, but recovery of mercury from an artificial sulfide formed during the amalgamation of high-grade silver ores and concentrates in a strong cyanide solution at the Buffalo Mines, Cobalt, Ontario. Mercury losses during amalgamation were excessive due to "flouring" of the mercury and conversion of this floured mercury to mercury sulfide when grinding with silver sulfides. The process for recovering mercury consisted of immersing the tailings filter cake, held on Moore filter baskets, in sodium sulfide - sodium hydroxide solution. This solution was drawn through the cake until the effluent liquor showed only traces of mercury. The mercury was then precipitated from solution by agitating with granulated aluminum.

H. G. S. Anderson, who was associated with Thornhill at Cobalt, Ont., made a number of further investigations but, as far as is known, results of this work were not published. He did furnish Bradley with some information on his investigations, a statement of which is included in Bradley's 1918 report. Donovan (1921) reported some laboratory test work which was done on cinnabar concentrates from New Zealand.

The only known attempt made in Nevada to leach a cinnabar ore with sodium sulfide solution was done on a small scale by Robert M. Wigglesworth (oral communication) many years ago at a property near Wabuska in Lyon County. The process was not successful because of the precipitation of a large amount of mercury sulfide during leaching.

More recently, laboratory test work, a pilot plant test, and operation of a mill were carried out on flotation concentrates from the Holly Minerals Corporation's mine

at Cinnabar, Idaho, about 6 miles east of Stibnite, Idaho. In February, 1957, Ernest Oberbillig and James R. Fyfe (Oberbillig and others, 1958) began both flotation and leaching tests at the College of Mines, University of Idaho. Pilot plant tests were run at the Mining Experiment Station, Washington State University. As a result of these tests, a flotation - leach plant was built at Cinnabar, Idaho, in January, 1958. This plant operated until June, 1959. It was shut down at that time because of exhaustion of the ore body. The process used in the Hermes, Idaho plant was as follows:

1. Flotation of the ore to make a cinnabar concentrate containing 50 to 60 percent mercury.
2. Leaching of the concentrate in sodium hydroxide solution to remove arsenic.
3. Leaching of the above pulp in sodium sulfide - sodium hydroxide solution to dissolve the mercury.
4. Separation of solution from leached concentrate.
5. Electrolytic precipitation of mercury from the pregnant leach liquor.

This operation was metallurgically successful.

CHEMICAL REACTIONS

The basic chemical reactions in the hydrometallurgy of mercury are:

Dissolution of mercury in a sodium sulfide solution:

$$HgS + Na_2S = HgS \cdot Na_2S \text{ (solution)} \quad (1)$$

Precipitation of mercury from solution by aluminum metal:

$$3(HgS \cdot Na_2S) + 8NaOH + 2Al = 3Hg + 6Na_2S + 2NaAlO_2 + 4H_2O \quad (2)$$

Electrolytic precipitation of mercury:

$$3(HgS \cdot Na_2S) + 6NaOH + e = 3Hg + 5Na_2S + Na_2SO_3 + 3H_2O \quad (3)$$

$$4(HgS \cdot Na_2S) + 6NaOH + e = 4Hg + 6Na_2S + Na_2S_2O_3 + 3H_2O \quad (4)$$

$$4(HgS \cdot Na_2S) + 8NaOH + e = 4Hg + 7Na_2S + Na_2SO_4 + 4H_2O \quad (5)$$

Dissolution of mercury in a sodium sulfide solution followed by direct precipitation of the metallic mercury is not as simple as indicated by equation (1) above.

Sodium sulfide in water hydrolyzes, according to the reaction

$$Na_2S + H_2O \rightleftarrows NaHS + NaOH \quad (6)$$

Since sodium hydrosulfide (NaHS) is not a solvent for mercury sulfide (cinnabar), it is necessary to add sodium hydroxide to the leach liquor to prevent reaction (6) from taking place. This is especially true for dilute solutions, where hydrolysis would otherwise be virtually complete.

Theoretically, 1 pound of sodium sulfide will take 2.98 pounds of mercury into

Burrell "Wrist Action" shaker. They were immediately filtered on a Buchner funnel and washed with two washes of dilute solvent and one water wash (standard procedure as described under leaching tests). The tailings from the 10-minute leach were then dried at 85° C. and assayed for mercury. The head sample for these tests assayed 10.21 lb mercury per ton. Effect of concentration of sodium hydroxide on dissolution of mercury, at various sodium sulfide concentrations, is given in table 28, and is shown graphically in figure 4.

The data in table 28 and the extraction curves in figure 4 show that addition of sodium hydroxide to dilute sodium sulfide solution effects a rapid increase in the rate of dissolution of mercury. As concentration of sodium sulfide is increased, change in rate of dissolution of mercury decreases.

ESTIMATED COSTS

Estimates of costs of this process were made on the basis of tests run on ore samples Nos. 8, 9, and 10, and the use of solutions similar to those used in the two continuous precipitation tests. In planning the adoption of such a process, it is necessary to calculate costs for the specific ore or ores to be treated, and since approximately 25 percent of the total cost of operation would be for reagents, laboratory tests should be made to determine consumption of sodium sulfide, sodium hydroxide, and aluminum.

Consumption of sodium sulfide and sodium hydroxide was calculated from leaching tests on samples Nos. 8, 9, and 10 (table 13). Consumption of aluminum is the average value obtained on the two continuous precipitation tests (tables 26 and 27). When precipitating with aluminum, sodium sulfide is regenerated and therefore becomes a credit to sodium sulfide consumption. Sodium hydroxide is consumed during precipitation. On the basis of one pound of mercury dissolved or precipitated as indicated by the above tests, reagent consumption is as follows:

Sodium sulfide	
Consumed in leaching	1.14 lb
Regenerated in precipitation	0.62 lb
Difference	0.52 lb
Sodium hydroxide	
Consumed in leaching	2.71 lb
Consumed in precipitation	0.35 lb
Total	3.06 lb
Aluminum	
Consumed in precipitation	0.35 lb

In the above figures, no allowance was made for possible regeneration of sodium hydroxide by adding lime to the barren solution before re-use.

An estimate of the cost of reagents per pound of mercury produced is as follows:

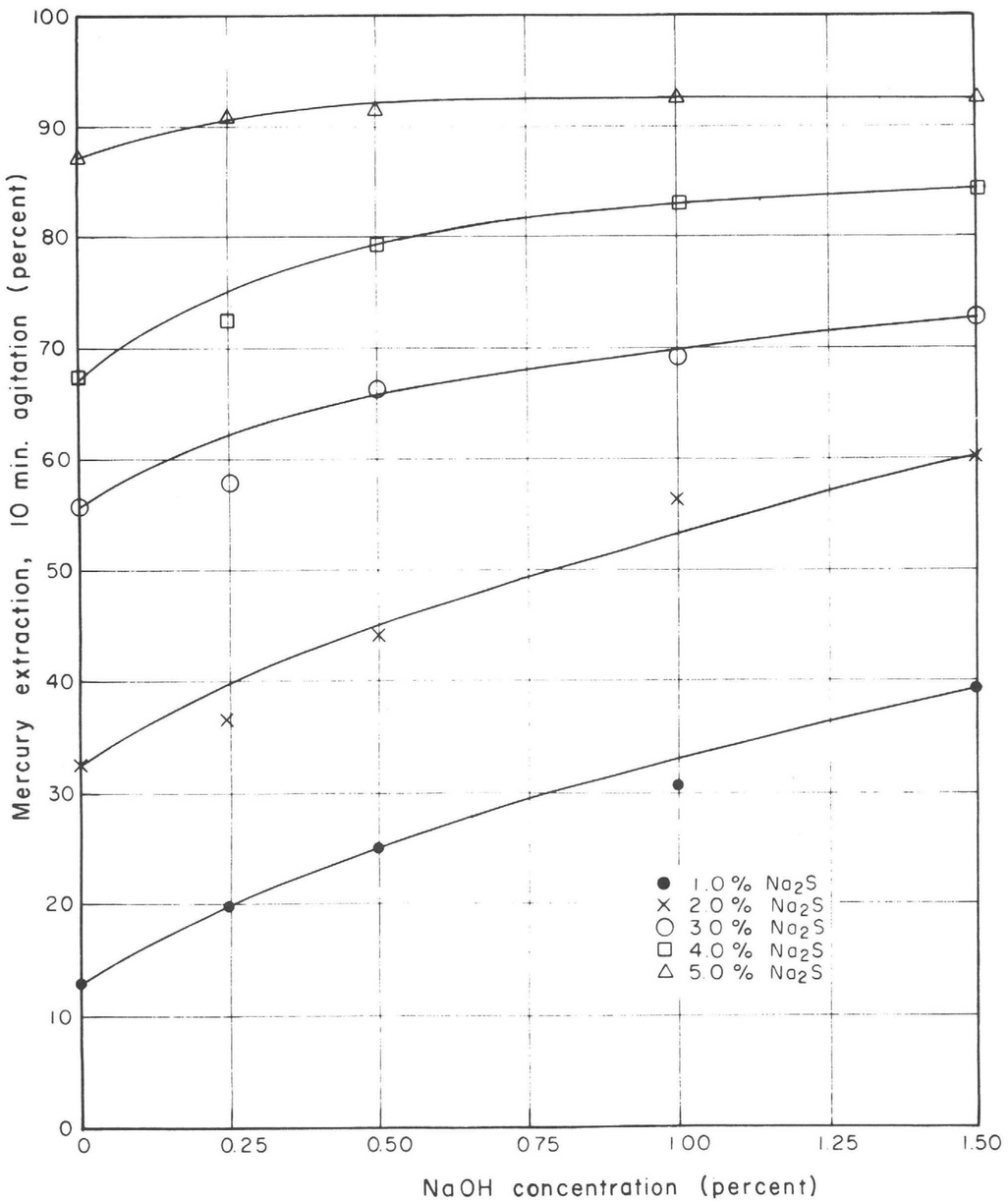

Figure 4. Effect of sodium hydroxide concentration on rate of mercury extraction.

solution. Actual consumption of sodium sulfide is always higher, however, because the sodium sulfide will react also with any arsenic sulfides, antimony sulfides, or limonite in the ore. In addition to the above losses, iron contamination from grinding media will react with sodium sulfide to form ferrous sulfide.

The soluble double sulfide, $HgS \cdot Na_2S$, is relatively unstable, and any sudden decrease in the concentration of free sodium sulfide in the leach solution will cause the precipitation of black mercury sulfide. Precautions are therefore necessary to prevent dilution of the solution with water or by other reactions which may lower the free sodium sulfide concentration of the leach liquor.

Theoretically 1 pound of aluminum should precipitate 11 pounds of mercury but this high ratio is never reached in practice for the following reasons:

(a) Aluminum is consumed by the free sodium hydroxide, according to the equation:

$$2Al + 2NaOH + 2H_2O = 2NaAlO_2 + 3H_2 \quad (7)$$

or:

$$2Al + 6NaOH = 2Na_3AlO_3 + 3H_2 \quad (8)$$

(b) Aluminum will be consumed by any antimony which may have been dissolved, and the antimony will be precipitated as a fine metallic powder. It may either amalgamate with the mercury, or float on top of the mercury, in which case it can be separated by filtration.

From equation (2) it will be seen that the sodium sulfide is not only released from the double sulfide ($HgS \cdot Na_2S$), but that additional sodium sulfide is generated. Theoretically, for every pound of sodium sulfide used to dissolve cinnabar, 2 pounds will be available after precipitating the mercury with aluminum metal. In the treatment of ores this theoretical condition will never be attained because any arsenic or antimony sulfides, limonite, or iron from the grinding media in the circuit will consume sodium sulfide. In an ore high in mercury and low in the other sodium-sulfide consumers, however, it is possible to have a build-up of sodium sulfide.

In using aluminum for precipitation of mercury, sodium hydroxide is consumed both in the precipitation reaction of equation (2) and by direct reaction with aluminum. A partial regeneration of sodium hydroxide can be made by adding hydrated lime to the barren solution, to convert soluble sodium aluminate to insoluble calcium aluminate and sodium hydroxide. The reaction is:

$$2NaAlO_2 + Ca(OH) = Ca(AlO_2)_2 + 2NaOH \quad (9)$$

The insoluble calcium aluminate will be removed with the leach tailings.

Not too much is known about the electrolytic precipitation of mercury from sodium sulfide - sodium hydroxide ($Na_2S \cdot NaOH$) solution. The reactions which take place are probably those previously given in equations (3), (4), and (5).

In his work at Hermes, Idaho, Fyfe (oral communication) determined that sodium sulfite, sodium thiosulfate, and sodium sulfate were present in the spent electrolyte.

ORES TESTED

The ore samples tested were selected in order to determine the effects of leaching on a reasonably wide variety of types and grades. Samples tested were as follows:

No. 1. High-grade chalcedony ore, Goldbanks district, Nevada

This sample was from the Goldbanks quicksilver mine about 34 miles south of Winnemucca and was taken from the so-called upper zone of mineralization. The cinnabar is disseminated in chalcedony, part of which is highly opalized. This was not necessarily a representative sample of the zone, but was taken to give a relatively high-grade sample. The sample assayed 2.37 percent mercury (47.4 lb per ton).

No. 2. Low-grade chalcedony ore, Goldbanks district, Nevada

This sample was from the same zone as No. 1, above, except that it was selected to give a relatively low mercury value. The only visible indication of cinnabar was a slight red "paint" color throughout the sample. The sample assayed 0.17 percent mercury (3.4 lb per ton).

No. 3. High-grade opalite ore, Goldbanks district, Nevada

This was a selected sample from the lower zone of mineralization in the pit at the Goldbanks mine. The gangue material is more highly opalized than that of samples Nos. 1 and 2. Assay of the sample was 0.56 percent mercury (11.2 lb per ton).

No. 4. Low-grade opalite ore, Goldbanks district, Nevada

Same as sample No. 3, but of considerably lower grade. Assay: 0.26 percent mercury (5.2 lb per ton).

No. 5. Low-grade opalite, Ivanhoe district, Nevada

This was a small sample, about 15 pounds, taken by Mr. Marion Fisher of Battle Mountain. The exact location was not given, only that it came from the Ivanhoe district, some 30 miles north-northeast of Battle Mountain. Gangue material was highly opalized, and the presence of cinnabar was indicated only by slight pink stains. Assay: 0.19 percent mercury (3.8 lb per ton).

No. 6. High-grade composite sample containing coarsely crystalline cinnabar

This sample was a composite of samples taken from the McCoy mine, Wild Horse district, Lander County, and the Pershing mine, Antelope Springs district, Pershing County, Nevada. Although the two properties are approximately 45 miles apart, because of their mineralogical similarity the samples were combined. Mercury occurs

Table 28. Effect of sodium hydroxide concentration on dissolution of mercury from cinnabar ore

Standard conditions:	
Size of sample	100 grams
Head assay	10.12 lb per ton
Solution vol.	200 ml
Washes	(1) 33 ml H_2S-NaOH sol. + 67 ml H_2O
	(2) 16 ml H_2S-NaOH sol. + 67 ml H_2O
	(3) 100 ml H_2O
Agitation time	10 min.

Solution strength (percent)		Tailings		Hg dissolved (percent)
Na_2S	NaOH	Weight (grams)	Hg assay (lb per ton)	
1.0	0.00	99.9	8.74	13.74
	0.25	99.8	8.10	20.16
	0.50	99.8	7.56	25.49
	1.00	99.7	7.00	31.03
	1.50	99.7	6.16	39.33
2.0	0.00	99.9	6.77	33.20
	0.25	99.6	6.39	37.15
	0.50	99.5	5.62	44.76
	1.00	99.3	4.42	56.62
	1.50	99.7	3.99	60.67
3.0	0.00	99.8	4.45	56.13
	0.25	99.2	4.24	58.40
	0.50	99.4	3.32	67.39
	1.00	99.2	3.07	69.86
	1.50	99.1	2.73	73.22
4.0	0.00	99.3	3.26	67.99
	0.25	98.8	2.76	73.02
	0.50	99.3	2.03	80.00
	1.00	99.1	1.68	83.60
	1.50	99.9	1.55	84.68
5.0	0.00	99.3	1.26	87.65
	0.25	99.3	0.87	91.50
	0.50	99.1	0.84	91.80
	1.00	99.1	0.74	92.79
	1.50	99.0	0.74	92.79

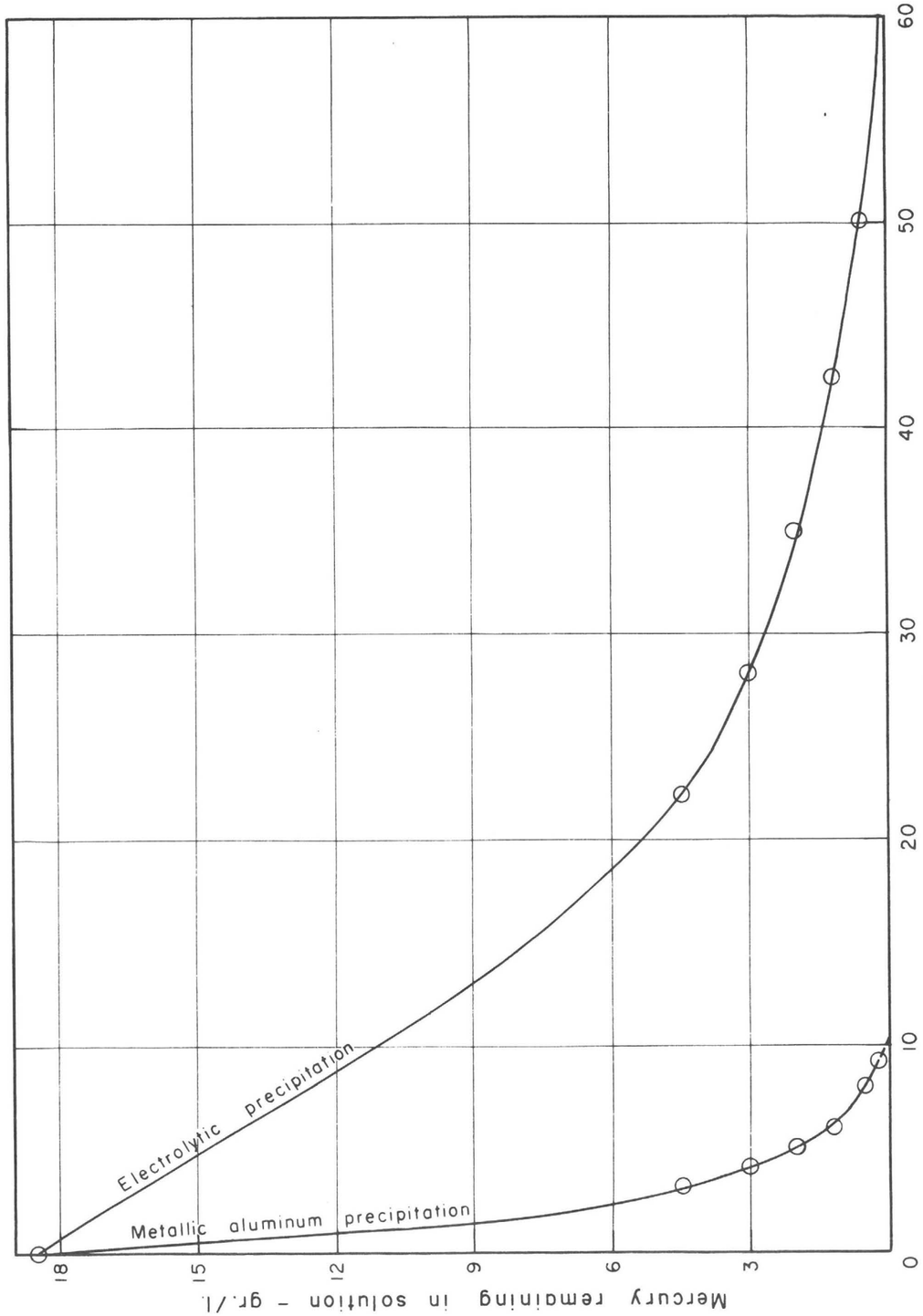

Figure 3. Comparison between electrolytic precipitation and precipitation with metallic aluminum. Electrolytic precipitation curve after Fyfe (unpublished report, 1957).

as cinnabar in fracture fillings and as discrete crystals in calcite veins in sandstone. Assay: 0.85 percent mercury (17.0 lb per ton).

No. 7. Siliceous sinter from near Cedar City, Utah

The cinnabar in this sample was coarsely crystalline. Assay: 0.34 percent mercury (6.8 lb per ton).

No. 8. Opalite from the Sam Rounds property, Ivanhoe disrtict, Nevada

The sample consisted of large pieces of opalite taken from the surface of a claim located in the name of Sam Rounds, about 1 mile from the Butte mine. Assay: 0.60 percent mercury (12.0 lb per ton).

No. 9. Siliceous sinter, Butte mine, Ivanhoe district, Nevada

The sample was from the Velvet Pit No. 1, from a pillar close to the entrance of the old mine workings. It was classified as a siliceous sinter. Assay: 0.10 percent mercury (2.0 lb per ton).

No. 10. Siliceous sinter, Butte mine, Ivanhoe district, Nevada

This sample was from the Butte Pit of the same mine as No. 9, and was also siliceous sinter. It came from the portal of a shallow tunnel, 2 to 4 feet from the surface. Assay: 0.05 percent mercury (1.0 lb per ton).

In some samples the cinnabar is disseminated in opalite while in others the cinnabar occurs as relatively coarse crystals. Those samples containing coarsely crystalline cinnabar could probably be treated by flotation to make a high-grade concentrate. Mercury in the concentrate could then be removed either by leaching or by retorting. It would probably not be possible to make a cinnabar concentrate by flotation of the disseminated ores because the cinnabar would not be liberated at any normal grind.

LABORATORY TESTING OF ORE SAMPLES

Because a large part of the laboratory work on this project was sponsored by General Minerals Corporation, the test program was directed toward determining data required to lay out plans for a pilot plant operation. Tests run during the period January 2 through June 30, 1960, included crushing, petrographic study, assay-screen analyses, grinding, leaching, settling, filtering, and precipitation of mercury from the leach liquor. Other tests were directed to more basic work, especially the effect of sodium hydroxide on the rate of dissolution of mercury in sodium sulfide-sodium hydroxide solution.

CRUSHING AND SAMPLING

All samples were first crushed to minus 0.5-inch size in a laboratory jaw crusher, and then screened on a 10-mesh vibrating screen. The screen oversize was then put through a set of 6- X 10-inch laboratory rolls and again screened on 10 mesh. Screen oversize was recirculated through the rolls until the entire sample was crushed to minus 10 mesh.

Each sample was well mixed by rolling on a large rolling cloth, and split through a Jones splitter to give representative samples for head assays and for the various tests to follow.

PETROGRAPHIC STUDIES

Petrographic studies were made by Dr. D. B. Slemmons, associate professor of geology, Mackay School of Mines, on three specimens of chalcedony-type ore from the Goldbanks district, taken from sample No. 1 before crushing. The scope of this project did not permit petrographic studies on all the ore samples taken. Because there was a larger potential tonnage of sample No. 1 than any of the other ores sampled, General Minerals Corporation indicated a preference for petrographic studies on specimens from this ore. The specimens were selected to give low, medium, and high values in mercury, as indicated by the intensity of the pink color. Chemical analyses for mercury made on portions of these samples were as follows: No. 1 (low grade), 13.3 lb per ton; No. 2 (medium grade), 20.5 lb per ton; No. 3 (high grade), 164.4 lb. per ton.

Specimen 1. Specimen 1 consists of coarse- to fine-grained angular fragments of white, cream-colored, and gray chert or siliceous sinter, in a pink to gray, somewhat porous, matrix. The fragments vary in size from less than 0.5 mm (0.02 inch, approx.) to over 40 mm (1.5 inches, approx.) in diameter. Nearly all of the cinnabar is in quartzose cement or in the small openings that are scattered through the cream-colored type of fragments. A small proportion of the cinnabar occurs in veinlets in some of the large fragments of the breccia, or as finely disseminated grains which give a pinkish cast to the fragments.

The density of the specimen was 2.50, which indicates that it should contain approximately 92 percent quartz, 7 percent voids, and a little less than 1 percent cinnabar.

In thin section the specimen shows coarse- to fine-grained, angular fragments of various types of siliceous sinter or chert. These fragments contain interlocking grains of quartz as the principal mineral; the quartz varies markedly in average grain size. The larger quartz grains are greater than 0.1 mm in diameter (plus 150 mesh), while the finest are smaller than 0.01 mm in average diameter (minus 800 mesh). The cinnabar is very fine-grained and, like the clay and limonite, is sparsely distributed in

After 96 hours	trace
Sodium sulfide, gr/liter	200
Sodium hydroxide, gr/liter	50
Temperature, °C	
Start	23
Finish	38
Current density, amp/sq ft cathode area	
Start	13.3
Finish	33.1
Voltage drop between electrodes	1.6
Average current efficiency (percent)	29.3
Anode:	
Material	Carbon block
Size	7.25 X 27 X 1.5 inches
Cathode:	
Material	Mercury metal contained in iron tank, made of 1/16-inch sheet
Size, iron tank	9 X 30 X 17 (deep) inches
Amount, mercury	approx. 0.2 inch in bottom of tank
Anode to cathode spacing, in.	7.5
Total time of electrolysis, hrs.	99.3

EFFECT OF SODIUM HYDROXIDE CONCENTRATION ON LEACHING OF MERCURY SULFIDE

In the references cited and in recent work done by the U. S. Bureau of Mines (Town and others, 1961), there has been some question as to the necessity for adding sodium hydroxide to the leaching process. Sodium sulfide, when dissolved in water, hydrolyzes to form sodium hydrosulfide (NaHS) and sodium hydroxide (NaOH), as shown in equation (6), (p. 4). The NaHS is not a solvent for mercury sulfide. In dilute solutions hydrolysis will be almost complete. However, as the concentration of sodium sulfide (Na_2S) increases, the degree of hydrolysis will decrease. Addition of NaOH to the solution prevents hydrolysis of the Na_2S.

In order to determine the effect of NaOH concentration on solubility of mercury sulfide in sodium sulfide solution, a series of tests was run on solutions containing varying concentrations of from 1 percent to 5 percent Na_2S. For each concentration of Na_2S, the amount of NaOH added varied from 0 percent to 1.5 percent. Ore used on these tests was a coarsely crystalline cinnabar, readily leachable. All tests were uniform, run on 100-gram samples from a large batch of minus 65-mesh material. Samples were agitated for 10 minutes in 200 ml of solution, in Erlenmeyer flasks on a

Table 27 - Continued

Sodium sulfide		
Pregnant solution, 57.0 liters @ 45.37 grams per liter		2586 g
Barren solution, 52.4 liters @ 53.39 grams per liter	2798 g	
Solution samples for assay	140 g	
Total		2938 g
Na_2S generated		352 g
Sodium Hydroxide		
Pregnant solution, 57.0 liters @ 9.32 grams per liter	531 g	
Barren solution, 52.4 liters @ 4.31 grams per liter	226 g	
Solution samples for assay	15 g	
Total		241 g
NaOH consumed		290 g

Considering barren solution equal in volume to the pregnant, the following results are obtained:

Reagents consumed

Reagents	Total (grams)	Pounds consumed per lb mercury precipitated
Aluminum	221	0.40
Sodium sulfide	+ 457	+ 0.81
Sodium hydroxide	285	0.50

COMPARISON BETWEEN ALUMINUM AND ELECTROLYTIC PRECIPITATION

Earlier in this report (p. 28) the possibility of precipitating mercury electrolytically was discussed briefly. A comparison of the rates of aluminum precipitation and electrolytic precipitation is shown graphically in figure 3. Data for the curve on aluminum precipitation are taken from table 18, while data on electrolytic precipitation are from tests run by Mr. Fyfe at Washington State University in 1957 (Oberbillig and others, 1958).

The conditions under which the electrolytic precipitation test was run are as follows:

Electrolyte:	
Volume, liters	52
Mercury, gr/liter	
Start	117.8
After 41 hours	22

the fragments and in the quartzose cement. Cinnabar occurs as minute crystals which attain a maximum size of 0.07 mm (200 mesh), but the average size is about 0.02 mm (800 mesh). Some of the grains are scarcely visible. Zircon, clay, and a few round grains of an unidentified pale-yellow mineral (which may be one of the secondary antimony oxides) are present in trace amounts.

Approximately 75 percent of the cinnabar appears to be in the matrix cement. Most of the remainder is in veins or as linings in the porous type of fragments. Nearly all the cinnabar is firmly cemented in larger grains of quartz. This material can be considered a siliceous breccia.

Specimen 2. This specimen consists of coarse- to fine-grained angular fragments of white, cream-colored, and gray sinter or chert, in a reddish-brown matrix. The hand specimen resembles specimen 1, except that the matrix is a deeper red in color. The extremely fine-grained character of the cinnabar crystals is indicated by difficulty in obtaining a pink or red streak when the specimen is scratched on a porcelain plate. The chert fragments show the same size variation as in specimen 1. The approximate abundance of the various components is shown in the following table:

Component	Est. percent
Fragments over 1/2 inch dia.	70
Fragments from 1/32 inch to 1/2 inch dia.	17
Quartz-cinnabar cement	10
Voids	3
	100

The density of the specimen is 2.61. This is what should be expected for a specimen composed of approximately 96 percent quartz, 1 percent cinnabar, and 3 percent voids.

The thin section is identical to that of specimen 1, with the following exceptions:

(1) Cinnabar is more abundant in the cementing material and the cinnabar crystals show a greater tendency to cluster in groups.

(2) Limonite, and the minute, yellowish grains of the undetermined mineral are more abundant than in specimen 1.

(3) Zircon is less abundant in specimen 2 than in specimen 1.

Specimen 3. This specimen is a breccia similar to specimens 1 and 2, with the principal exception of the spectacular red color of the matrix in specimen 3. The much brighter color of the matrix indicates a higher percentage of cinnabar. In spite of the higher percentage of cinnabar, it was difficult to detect any color in the streak of pulverized material. Evidently the quartzose cement tends to enclose the minute

grains of cinnabar. The approximate percentage of the major components is:

Component	Est. percent
Fragments over 1/2 inch dia.	65
Fragments from 1/32 inch to 1/2 inch dia.	20
Quartz-cinnabar cement	10
Voids	5
	100

In specimen 3 there is a distinct tendency for the cinnabar crystals to form clusters; these clusters in some cases attain a maximum size of over 0.1 mm diameter. The average size is about 0.02 mm diameter, the same as that in specimens 1 and 2.

The approximate distribution of cinnabar is as follows:

Occurrence	Percent of contained cinnabar
With quartz in cement	90
Vein fillings in breccia fragments	8
Disseminated within fragments	1
Crystals deposited in openings	1
	100

The cinnabar in specimen 3 was estimated at 7 percent; this is in good agreement with the analysis (140 lb per ton by estimate, 164.4 lb per ton by assay). The density of the specimen was determined at 2.66, which is in better agreement with about 3 percent cinnabar, but this value would change rapidly with small changes in the estimate of the percent of voids. This sample was classified as cinnabar-bearing siliceous breccia.

From the petrographic studies, the following conclusions were drawn:

(1) In order to release 90 percent of the cinnabar, it would be necessary to grind to minus 800 mesh. Therefore, flotation could not be applied to this ore.

(2) Cinnabar is the only semi-opaque or opaque mineral in these specimens. The only other mineral which might contain valuable elements is the pale-yellow-colored unknown mineral. The minute size of this mineral prevented petrographic identification.

(3) The cementation, although not complete, is sufficient to cause the ore to fracture across the fragments rather than along the grain boundaries. This will inhibit the release of cinnabar during grinding.

(4) The presence of voids, and the small amounts of limonite and clay, should make leaching effective and rapid. The ores with high porosity should leach more readily than those of lower porosity.

precipitation is primarily accounted for by the larger charge of aluminum metal. Also, addition of mercury at the start of test No. 12 may make a difference in the rate of precipitation. In earlier batch tests it was noted that mercury precipitation was quite slow at the start of certain tests and appeared to increase in rate as mercury became amalgamated to the aluminum and built up in a pool in the bottom of the precipitation vessel. Also, floured mercury is picked up in such a pool.

Table 27. Continuous precipitation of recycled solution

	Volume (liters)	Assays (grams per liter)			Amounts (grams)		
		Hg	Na_2S	NaOH	Hg	Na_2S	NaOH
Pregnant	57.0	10.29	45.37	9.32	584.8	2586	531
Barren (composite)	52.4	0.39	53.39	4.31	20.7	2796	226

Metallurgical Balance:

Mercury		
Pregnant solution, 57.0 liters @ 10.29 grams per liter	584.8 g	
Mercury added at start	400.0 g	
Total		984.8 g
Products:		
Liquid mercury	450.1 g	
Retorted from sludge	507.5 g	
Wash from filtering sludge, 11.4 liters @ 0.30 gram per liter	3.4 g	
Solution samples for assay	6.2 g	
Barren solution, 52.4 liters @ 0.39 grams per liter	20.4 g	
Total		987.6 g
Difference		+ 3.8 g
Aluminum		
Charged to baskets	400 g	
Pregnant solution, 57.0 liters @ 2.76 grams per liter	157 g	
Total		557 g
Unconsumed metal	179 g	
Barren solution, 52.4 liters @ 6.78 grams per liter	355 g	
Solution samples for assay	13 g	
Total		547 g
Difference (unaccounted for)		10 g
Aluminum consumed in precipitation		221 g

from mercury which had amalgamated to the first basket during the previous test. In accounting for aluminum, sodium sulfide, and sodium hydroxide, the solution samples taken during the run for assaying were assayed for mercury only; therefore, only mercury contained in these samples is accounted for in the metallurgical balance. In plant operation gains or losses of aluminum, sodium sulfide, and sodium hydroxide would be slightly different from those indicated by this test. Taking barren solution as being equal in volume to the pregnant, the following results are obtained:

Reagents consumed

Reagents	Total (grams)	Pounds consumed per lb mercury precipitated
Aluminum	155	0.30
Sodium sulfide	+ 276	+ 0.54
Sodium hydroxide	106	0.21

The purpose of test No. 12 was to determine the effect on mercury precipitation of re-using solution which contained aluminum in solution as $NaAlO_2$. The test was similar to test No. 11, except that pregnant solution was prepared by leaching cinnabar flotation concentrates with barren solution from test No. 11. Also, sodium hydroxide was added and the volume made up to 57 liters with water. This solution contained 2.77 grams of aluminum per liter. The solution was run through the circuit once, and average contact time with aluminum in the precipitating circuit was 5 hours 45 minutes. In this test 400 grams of mercury were added at the start of precipitation, 200 grams to each agitator, and twice as much aluminum was added at the start. Results of test No. 12 are given in table 27.

Overall recovery of mercury in test No. 12, based on products, was 95.35 percent. This is almost the same as that obtained in test No. 11 after the first cycle through the circuit. On the basis of solution assays, precipitation of mercury was 96.21 percent. Comparing tests Nos. 11 and 12, sodium sulfide regeneration is considerably higher in test No. 12, which is, in part, accounted for by the higher mercury content of the pregnant solution. Aluminum and sodium hydroxide consumption is higher in test No. 12, also. This results from the larger charge of aluminum and the higher NaOH concentration, which causes more direct reaction between aluminum and sodium hydroxide.

Barren solution samples were taken during the course of these tests, and it was noted that the mercury precipitated more rapidly in test No. 12 than in test No. 11. For example, after 1 hour and 20 minutes of operating time, mercury precipitated amounted to 63.5 percent and 95.2 percent respectively. The more rapid rate of

ASSAY-SCREEN ANALYSES

Assay-screen analyses were run on samples Nos. 1, 3, 5, and 6 to determine the size distribution of mercury in high-grade chalcedony, high-grade opalite, low-grade opalite, and coarsely crystalline cinnabar types of ores. Analyses were not run on samples Nos. 2 and 4 as they were the same types as Nos. 1 and 3. Sample No. 7 was similar to No. 6, in that it contained coarsely crystalline cinnabar, and as the deposit was small, no assay-screen analysis was made. Samples Nos. 8, 9, and 10 were from relatively small deposits, and therefore distribution of the cinnabar for the various size fractions was not determined on these. Results of these tests are shown in table 1 through 4. All screen analyses were made on Tyler Standard Screens. The tests were run on the minus 10-mesh products from the laboratory rolls, as described under Crushing, above.

The assay-screen analyses show that, in the opalite and chalcedony types of ores, the mercury values are fairly uniformly distributed throughout the various screen sizes. The size fractions from sample No. 1 varied from a low of 42.0 lb to a high of 53.5 lb

Table 1. Assay-screen analysis of sample No. 1

Mesh size	Weights: Grams	Weights: Percent	Weights: Cumulative percent	Mercury assay (lb per ton)	Mercury distribution (percent)
- 10 + 20	196.9	39.31	39.31	48.2	40.44
- 20 + 35	154.2	30.79	70.10	46.8	30.79
- 35 + 48	42.8	8.55	78.65	44.0	8.04
- 48 + 65	27.9	5.57	84.22	43.2	5.14
- 65 + 100	24.5	4.88	89.10	43.2	4.51
-100 + 200	28.0	5.59	94.69	42.0	5.01
-200	26.6	5.31	100.00	53.5	6.07
Totals	500.9	100.00		(46.8)	100.00

Head assay: Calculated, 46.8 lb mercury per ton
Assayed, 47.3 lb mercury per ton

Table 2. Assay-screen analysis of sample No. 3

Mesh size	Weights: Grams	Weights: Percent	Weights: Cumulative percent	Mercury assay (lb per ton)	Mercury distribution (percent)
- 10 + 20	189.4	38.03	38.03	11.2	38.90
- 20 + 35	156.2	31.37	69.40	11.1	31.78
- 35 + 48	47.0	9.44	78.84	10.1	8.68
- 48 + 65	27.6	5.54	84.38	10.2	5.14
- 65 + 100	26.6	5.34	89.72	10.2	4.95
-100 + 200	27.3	5.48	95.20	10.3	5.14
-200	23.9	4.80	100.00	12.4	5.41
Totals	498.0	100.00		(10.9)	100.00

Head assay: Calculated, 10.9 lb mercury per ton
Assayed, 11.2 lb mercury per ton

of mercury per ton. This represents a variation of 14.4 percent from the calculated head assay of 46.8 lb per ton. Percent variation from the calculated head assay for the plus 200-mesh fractions is only plus 2.86 percent. Similar results were obtained on samples Nos. 3 and 5. The weight and corresponding values are predominately in the coarser sizes.

When the values occur as coarse, crystalline cinnabar, as in sample No. 6, screen-analysis results are entirely different. The cinnabar, being relatively soft and

Table 3. Assay-screen analysis of sample No. 5

Mesh size	Weights: Grams	Weights: Percent	Weights: Cumulative percent	Mercury assay (lb per ton)	Mercury distribution (percent)
- 10 + 20	183.9	37.02	37.02	3.5	37.22
- 20 + 35	157.0	31.60	68.62	3.7	33.59
- 35 + 48	46.8	9.42	78.04	3.3	8.91
- 48 + 65	30.2	6.08	84.12	3.3	5.74
- 65 + 100	27.1	5.45	89.57	2.7	4.20
-100 + 200	28.4	5.72	95.29	3.6	5.91
-200	23.4	4.71	100.00	3.3	4.43
Totals	496.8	100.00		(3.5)	100.00

Head assay: Calculated, 3.5 lb mercury per ton
Assayed, 3.7 lb mercury per ton

Table 26. Continuous precipitation of mercury on aluminum sheet

	Volume (liters)	Assays (grams per liter): Hg	Assays: Na_2S	Assays: NaOH	Amounts (grams): Hg	Amounts: Na_2S	Amounts: NaOH
Pregnant	57.0	9.27	42.28	8.10	528.39	2410	462
Barren at end of run	-	0.082	46.94	5.96	-	-	-
Barren (composite)	52.3	0.222	47.13	6.25	11.61	2465	327

Metallurgical balance:

Mercury

Pregnant solution, 57.0 @ 9.27 grams per liter		528.4 g
Products:		
Liquid mercury	298.5 g	
Retorted from sludge	216.3 g	
Sludge on filter paper from sample filtrations	4.8 g	
Solution samples for assay	5.6 g	
Barren solution, 52.3 liters @ 0.222 gram per liter	11.6 g	
Total		536.8 g
Difference		+ 8.4 g

Aluminum

Charged to baskets	229 g
Unconsumed metal	74 g
Al consumed	155 g
Barren solution, 52.3 liters @ 2.69 grams per liter	141 g
Difference (unaccounted for)	14 g

Sodium sulfide

Pregnant solution, 57.0 liters @ 42.28 grams per liter	2410 g
Barren solution, 52.3 liters @ 47.13 grams per liter	2465 g
Na_2S generated	55 g

Sodium hydroxide

Pregnant solution, 57.0 liters @ 8.10 grams per liter	462 g
Barren solution, 52.3 liters @ 6.25 grams per liter	327 g
NaOH consumed	135 g

This latter result was obtained from continuous operation after equilibrium was attained in the precipitation circuit. Mercury precipitated, after the first cycle through the system, was 95.90 percent.

In the metallurgical balance there is shown an unaccountable gain of 8.4 grams of mercury, equal to 1.6 percent of the mercury originally in the system. This gain came

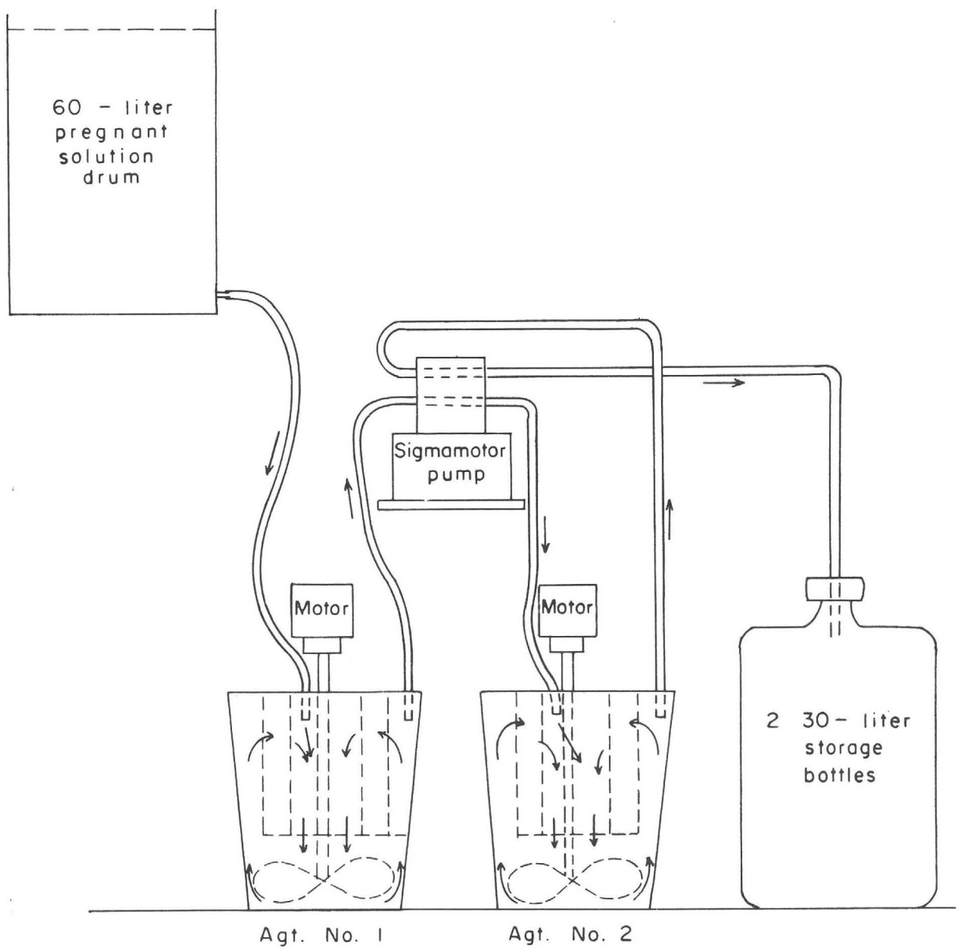

Figure 2. Diagram of apparatus used for continous precipitation of mercury on aluminum sheet.

Table 4. Assay-screen analysis of sample No. 6

Mesh size	Weights: Grams	Weights: Percent	Weights: Cumulative percent	Mercury assay (lb per ton)	Mercury distribution (percent)
- 10 + 20	199.1	39.93	39.93	9.8	23.03
- 20 + 35	141.5	28.38	68.31	11.8	19.85
- 35 + 48	34.5	6.92	75.23	18.3	7.47
- 48 + 65	23.9	4.79	80.02	24.3	6.87
- 65 + 100	18.9	3.79	83.81	29.6	6.63
-100 + 200	29.6	5.94	89.75	36.1	12.68
-200	51.1	10.25	100.00	38.7	23.47
Totals	498.6	100.00		(16.9)	100.00

Head assay: Calculated, 16.9 lb mercury per ton
Assayed, 16.9 lb mercury per ton

friable, breaks down more rapidly than the gangue minerals with a consequent upgrading of the fines. The assay-screen analysis of sample No. 6, which had a calculated head value of 16.9 lb of mercury per ton, gave differences in assay from 9.8 lb in the plus 20-mesh fraction to 38.7 lb in the minus 200-mesh fraction. This represents a difference in value from the head assay of 130 percent.

Results of these tests indicate that, in order to obtain a high extraction of the mercury, the opalite and chalcedony types of ores must be more finely ground before or during leaching than the coarsely crystalline cinnabar types. Also, required leaching time for the opalite and chalcedony types may be extended.

GRINDING TESTS

Grinding tests were run on sample No. 2 only, since examination of this sample indicated that it might be the most difficult material to grind. Two tests were run - one on a grind in water, the other in Na_2S-NaOH solution. The purposes of these tests were threefold: (1) to determine grinding characteristics, (2) to determine mercury dissolution during grinding, and (3) to prepare pulp for settling and filtering tests.

The grinding test using water was a preliminary test only. A sample of 500 grams of minus 10-mesh ore was ground for 25 minutes with 1,000 ml of water. The laboratory ball mill used for this test was an 8- X 8-inch steel cylinder with clamp-on cover. The ball charge weighed approximately 11 kilograms, with ball sizes of 3/8 to 1-1/4 inches. After grinding, the ore charge and balls were dumped onto a coarse screen and the ground pulp washed into a bucket. The pulp was then screened through a 65-mesh screen, and only 0.8 percent of the pulp was plus 65 mesh in size.

The second grinding test was a duplicate of the above except that grinding was

done in sodium sulfide - sodium hydroxide solution. After grinding, the pulp was filtered on a Buchner funnel and the grinding balls were washed free of pulp by using part of the filtrate. This filtrate with slimes in it was again filtered on the Buchner funnel. The final filtrate was measured and kept for assay. The filter cake was then washed with water and the filtrate from the washing was measured and assayed. During this grind, 90.47 percent of the mercury was dissolved. Data on this test are given in the following table:

Ore Data

	Weight (grams)	Hg assay (lb per ton)	Contained mercury (grams)	Mercury distribution (percent)
Feed	500.0	3.58	0.895	100.00
Tailing	500.8	0.17	0.043	9.53

Solution Data

Solution	Volume (ml)	Assays (gr per liter)			Amounts (grams)		
		Hg	Na_2S	NaOH	Hg	Na_2S	NaOH
Solution on:							
Barren	1000	-	40.03	8.42	-	40.03	8.42
Water	4000	-	-	-	-	-	-
Solution Off:							
Pregnant	780	1.069	37.13	8.42	0.833	28.96	6.57
Wash	4000	0.022	1.39	.40	0.086	5.54	1.61
Totals					0.919	34.50	8.18

Accountability for mercury shows that the pregnant liquor, wash liquor, and leach tailings contained 0.962 grams of mercury, or 3.85 lb per ton of ore. This is somewhat higher than the assay value of the ore feed of 3.58 lb per ton. Consumption of sodium sulfide was 5.53 grams for a 500-gram sample, or 22.12 lb per ton of ore. Sodium hydroxide consumption was 0.24 gram, or 0.96 lb per ton of ore. Converted to the basis of mercury dissolved, this becomes 6.02 pounds Na_2S and 0.26 pound of NaOH per pound of mercury. An assay-screen analysis was run on the tailings from this test, the results of which are given in table 5.

Table 25 - Continued

Aluminum

Aluminum charged to basket	50.0 g
Aluminum remaining in basket	34.4 g
Aluminum used	15.6 g

Pregnant solution for this test contained 100.80 grams of mercury of which 99.82 percent was precipitated (from solution assays), or 100.62 grams of mercury precipitated. Therefore, in this test, one pound of aluminum would be used in precipitating 6.45 pounds of mercury.

Examination of the wire basket showed that mercury had amalgamated with the wire. Wire mesh used for the basket was galvanized and, although it was pickled in acid before being used, the zinc had not been completely removed. In the test which followed, reusing this basket, an overaccounting of mercury occurs.

Continuous Precipitation Tests

The second and third tests (Nos. 11 and 12) using aluminum sheet were continuous runs on 57-liter batches of solution. Precipitation was in two stages, that is, two buckets with baskets containing aluminum sheet were used. The second basket was made of punched stainless steel sheet welded together to make concentric cylinders. The general layout of this system is shown in figure 2.

The variables in these two tests were time of precipitation, addition of liquid mercury metal at the start of the third test, and use, in the last test, of solution which contained aluminum (in solution) from the previous precipitation.

The pregnant solution for test No. 11 (p. 41) was made up to contain approximately 1 percent mercury, 4 percent sodium sulfide, and 1 percent sodium hydroxide. Each basket was charged with one square foot of 26-gauge sheet aluminum cut into strips with dimensions of about 1.5 X 4 inches. Weight of each charge of aluminum was 99.4 grams, or a total of 198.8 grams. Solution flow rate averaged 190 ml per minute; time required to run the entire 57 liters through the circuit was 5 hours. Because of incomplete mercury precipitation in the first run, the barren solution was run through the circuit a second time. This run took 6 hours and 30 minutes. After pumping clear barren solution back to storage, all mercury and sludge (floured Hg, HgS, and aluminum fines) were transferred back to the No. 1 agitator. An additional 30 grams of strip aluminum sheet were added to No. 2 basket. Precipitation results and a metallurgical balance for test No. 11 are given in table 26.

The difference in volumes between pregnant and barren solutions is accounted for by the solution samples taken during the operation (11 samples) and the solution remaining with the thickened sludge. A composite sample of the barren solution at the end of the run analyzed 0.222 grams of mercury per liter, indicating that 97.60 percent of the mercury had been precipitated; final sample of barren solution assayed 0.082 gram mercury per liter, indicating that 99.12 percent of the mercury had been precipitated.

carefully tested on a continuous pilot-plant run before being adopted on a plant scale.

PRECIPITATION WITH ALUMINUM SHEET

In addition to the precipitation methods already described, three tests were run in which small pieces of aluminum sheet were used as the precipitant. A considerable saving in the cost of aluminum should be possible in plant practice by the use of scrap aluminum sheet, cuttings, etc.

Batch Precipitation Tests

The first of these three tests was a single-stage batch precipitation, using 6 liters of pregnant solution in continuous contact with the sheet aluminum. The aluminum was held in a basket made of two wire-mesh cylinders, one inside the other, spaced about 1 inch apart, and closed at the bottom with wire mesh. The basket, containing 1.5-X 4-inch aluminum strips, was placed in a bucket with the solution. The solution was agitated continuously by a motor-driven, 3-blade stainless steel propellor, rotating at 500 rpm, which propelled it down the bucket, up the outside of the basket, and back through the aluminum sheet. Results of this test are given in table 25.

Table 25. Batch precipitation of mercury on aluminum sheet

Solution No.	Agitation time (hrs.)	Solution assay (grams per liter)	Mercury precipitated (percent)
10-0	0.0	16.80	0.0
10-1	2.0	4.89	70.89
10-2	4.0	0.046	99.73
10-3	6.0	0.031	99.82

Metallurgical balance on this test was as follows:

Mercury		
Pregnant solution, 6 liters @ 16.80 grams per liter		100.80 g
Products:		
Liquid mercury	64.19 g	
Aluminum sheet cleanup	0.17 g	
HgS and floured Hg (as filter cake)	19.28 g	
Solution samples for assay (10-1, 2, 3)	0.10 g	
Barren solution	0.19 g	
Total		83.93 g
Loss (unaccounted for)		16.87 g

Table 5. Assay-screen analysis of pulp from wet grinding

Mesh size	Weights: Grams	Weights: Percent	Weights: Cumulative percent	Mercury assay (lb per ton)	Mercury distribution (percent)
+ 20	3.8	0.76	0.76	2.54	10.98
- 20 + 48	4.0	0.80	1.56	0.61	2.77
- 48 + 65	3.4	0.68	2.24	0.56	2.17
- 65 + 100	12.4	2.48	4.72	0.20	2.82
- 100	477.2	95.28	100.00	0.15	81.26
Totals	500.8	100.00		(0.18)	100.00

LEACHING TESTS

Both agitation and percolation leaching tests were made in the laboratory. Agitation leaching tests were run on all the samples previously listed, whereas percolation leaching tests were run on selected samples only. Leaching was done in Na_2S-NaOH solution with most of the tests run in a solution containing 4 percent sodium sulfide and 1 percent sodium hydroxide. The solution was made by dissolving the equivalent of 4 parts of 100 percent Na_2S and 1 part of 100 percent NaOH in 95 parts of water. Reagents used were technical grade, 60 percent flake sodium sulfide, and reagent grade, 97 percent sodium hydroxide. This solution, in the individual test data, is called "5 percent solvent." A few tests were made using 3 percent solvent (2 parts of Na_2S, 1 part NaOH, and 97 parts water, by weight).

Before washing with water, it was necessary to wash the filter cake with dilute solvent in order to remove all soluble mercury. The soluble mercury complex, $Hgs \cdot Na_2S$, formed when cinnabar is dissolved in Na_2S solution, is relatively unstable and any sudden dilution such as washing the cake with water would cause a partial premature precipitation of insoluble mercury sulfide in the filter cake, with consequent higher tailing losses.

Pregnant liquor from leaching tests was kept separate from the wash liquors and reserved for precipitation tests.

Agitation Leaching

Ore samples were prepared by screening batches of minus 10-mesh ore on the required screen size and then stage pulverizing (dry) followed by successive screenings until all the material passed the required screen size, usually 48 or 65 mesh. It was not possible to stage grind in solution and wet screen in the laboratory, because the solvent would attack the screens.

The standard agitation leaching tests were run on 200-gram ore samples pulped in 400 ml of solvent. Agitation was done in 2.5-liter bottles on laboratory bottle rolls. Variables in the leaching tests included fineness of grind, time of leaching, and strength of solvent. After leaching, pulps were filtered on a Buchner funnel and given three washes as follows:

Wash No. 1: 50 ml of 5 percent solvent diluted with 100 ml of water
Wash No. 2: 25 ml of 5 percent solvent diluted with 100 ml of water
Wash No. 3: 100 ml of water

Results of about 70 agitation leaching tests on the various ore samples are given in tables 6 to 13 inclusive.

The results given in table 6 show conclusively that when the ore is ground sufficiently fine, dissolution of mercury in sodium sulfide solution is quite rapid. In test No. 1-8, 96.32 percent of the cinnabar had been dissolved in 21 minutes. At the end of 1 hour, mercury extraction was about 98 percent. A four-hour agitation period seems to be desirable in order to insure relatively complete dissolution of the cinnabar. Agitation for more than 4 hours does not give enough additional extraction to warrant the power consumption, cost of larger agitators, etc. In some tests which

Table 6. Agitation leaching of sample No. 1

High-grade chalcedony ore, Goldbanks district

Standard conditions:		
	Size of sample	200 grams
	Head assay	47.3 lb mercury per ton
	Solution	400 ml 5 percent solvent
	Washes	1: 50 ml 5 percent sol. + 100 ml H_2O
		2: 25 ml 5 percent sol. + 100 ml H_2O
		3: 100 ml H_2O

Test No.	Agitation time Hrs.	Agitation time Min.	Tailings Weight (grams)	Tailings Hg assay (lb per ton)	Hg extraction (percent)
			Minus-48-mesh grind		
1-1	1	0	196.5	2.80	94.19
1-2	2	0	196.7	1.97	95.91
1-3	3	0	196.0	1.66	96.56
1-4	4	0	193.2	1.24	97.43 (1)
1-5	4	0	196.4	1.03	97.86 (2)
1-6	5	0	197.2	1.34	97.21
1-7	6	0	197.5	1.34	97.20

In order to make a preliminary check of this, four tests were run on 150 ml samples of solution using bottle-roll agitation. The amount of aluminum powder and concentration of sodium hydroxide were varied on these tests. Because the aluminum powder had a tendency to float on the solution, three drops of 1 percent Aerosol 18 (wetting agent) were added to each test. Each test was agitated on the bottle rolls for 1 hour. Results given in table 23 show that either excess aluminum powder or sodium hydroxide increases the amount of mercury sulfide formed. Pregnant solution contained 2.547 grams of mercury per liter.

A simple and efficient way to precipitate mercury from solution seems to be to use a method similar to the Merrill-Crowe process for precipitation of gold or silver from cyanide solution, using aluminum dust (powder) instead of zinc dust. The only difference would be that the precipitated mercury, being liquid, would pass through the filter press with the barren solution, and some type of mercury trap would be necessary ahead of the barren solution tank. The press could not be eliminated however, since the small amount of mercury sulfide and any excess aluminum powder would have to be separated from the barren solution.

In order to simulate this method of precipitation in the laboratory, a series of five tests was run for relatively short periods of time in a 50-gram laboratory flotation machine having a high-speed impellor. This gave a mixing action similar to the centrifugal pump feed to a press in the Merrill-Crowe process. Solution was then separated from mercury and excess aluminum powder by filtering. Data on these tests are given in table 24.

Table 24. Simulation of Merrill-Crowe method by precipitation in 50-gram flotation machine

Solution No.	Pregnant solution (ml)	Al powder added (grams)	Time (min.)	Mercury remaining in solution (grams per liter)	Mercury precipitated (percent)
14-0	-	0.00	0	12.105	0.00
14-1	200	1.12	1	-	-
14-2	200	1.12	2	-	-
14-3	200	1.12	3	0.046	99.61
14-4	200	1.12	6	0.036	99.70
14-5	200	1.12	12	0.072	99.40

In the first two tests most of the mercury was floured and this, in combination with the powdered aluminum, made filtration impossible. A large amount of mercury sulfide also was precipitated in all of the tests. Test No. 14-5, run for 12 minutes, showed slightly lower mercury precipitation, possibly due to re-solution of mercury sulfide.

This method gave rapid, relatively complete mercury precipitation and for plant operation appears to be the best method of precipitation. On the first two tests insufficient time was allowed for the floured mercury to collect. The method should be

give as complete or as rapid mercury precipitation as did batch additions in earlier tests, but equilibrium between aluminum and mercury contained in solution was not reached in this test. A bulk addition of aluminum at the start of the test, with continuous feed thereafter, should have given rapid and complete precipitation.

Table 22. Precipitation of mercury by continuous feed of aluminum powder

High-speed impellor-type agitation (186 rpm)

Solution No.	Precipitation time Hrs.	Precipitation time Min.	Mercury remaining in solution (grams per liter)	Mercury precipitated (percent)
9-0	0	0	16.72	0.00
9-1	3	5	10.53	37.02
9-2	4	5	8.58	48.68
9-3	5	50	5.40	67.70
9-4	6	50	4.59	72.55
9-5	7	50	3.22	80.74

After agitation the precipitated mercury and mercury sulfide were separated from the solution by filtration on a Buchner funnel. Addition of 1 gram of aluminum powder to the filtrate, followed by 2 hours of agitation, produced a barren solution assaying only a trace of mercury, indicating essentially complete precipitation of the mercury. This second precipitate contained some mercury sulfide which partially redissolved upon standing for 4 hours in contact with the barren solution. After the 4-hour period, the solution assayed 0.133 gram of mercury per liter.

The amount of mercury sulfide formed in all preceding tests showed considerable variation. More mercury sulfide was formed when using aluminum powder than when using 20-mesh granulated aluminum. Also, a large excess of aluminum powder appeared to give an increase in the amount of HgS precipitated. It is desirable to keep the amount of HgS to a minimum because it redissolves rapidly while in contact with solution; when separated from the solution retorting is necessary to recover the mercury.

Table 23. Effect of excess aluminum and sodium hydroxide on mercury sulfide formation

Solution No.	Al powder (mg)	1-N NaOH added (ml)	Total Hg precipitated (percent)	Distribution of mercury: Hg (percent)	Distribution of mercury: HgS (percent)	Distribution of mercury: Sol. (percent)
5-1	100	0	76.05	70.76	5.29	23.95
5-2	100	10	71.13	64.08	7.05	28.87
5-3	500	0	96.54	85.07	11.47	3.46
5-4	500	10	96.05	83.87	12.18	3.95

Table 6 - Continued

Minus 65-mesh grind

1- 8	0	21	197.0	1.77	96.32	
1- 9	0	30	120.9	1.56	96.76	(3)
1-10	0	50	194.5	1.24	97.45	
1-11	1	0	196.7	1.03	97.86	
1-12	1	0	195.4	1.03	97.87	(4)
1-13	1	0	196.4	1.75	96.36	
1-14	2	0	193.3	1.03	97.90	
1-15	2	47	197.5	0.62	98.69	
1-16	3	0	197.3	0.98	97.96	
1-17	7	22	197.3	0.31	99.35	
1-18	31	22	197.8	0.41	99.14	

(1) 197 grams of ore in heads
(2) 380 ml of solvent
(3) 123 grams ore and 246 ml solvent
(4) 300 ml solvent

Table 7. Agitation leaching of sample No. 2

Low-grade chalcedony ore, Goldbanks district

Standard Conditions:
- Size of sample: 200 grams
- Head assay: 3.58 lb mercury per ton
- Solution: 400 ml 5 percent solvent
- Washes: 1: 50 ml 5 percent sol. + 100 ml H_2O; 2: 25 ml 5 percent sol. + 100 ml H_2O; 3: 100 ml H_2O

Test No.	Agitation time Hrs.	Agitation time Min.	Tailings Weight (grams)	Tailings Hg assay (lb per ton)	Hg extraction (percent)
Minus 48-mesh grind					
2- 1	1	0	199.4	0.15	95.83
2- 2	2	0	199.5	0.15	95.82
2- 3	3	0	199.5	0.10	97.21
2- 4	4	0	199.4	0.07	98.05

Table 7 - Continued

		Minus 65-mesh grind			
2- 5	1	0	199.4	0.15	95.82
2- 6	2	0	199.5	0.15	95.82
2- 7	3	0	199.5	0.05	98.61
2- 8	4	0	199.6	0.05	98.61
		Minus 65-mesh grind (3 percent solvent + 3 washes, using 3 percent solvent diluted as above)			
2- 9	1	0	199.5	0.25	93.03
2-10	2	0	199.5	0.25	93.03
2-11	3	0	199.4	0.25	93.04
2-12	4	0	199.5	0.15	95.82
2-13	5	0	199.6	0.05	98.61
		Minus 100-mesh grind			
2-14	1	30	199.4	0.05	98.60

were run for more than 4 hours (1-6, 1-7), extraction dropped slightly. This is probably caused by the formation of slimes, resulting in less efficient washing of the filter cake.

Slightly better extractions were obtained on ore ground to minus 65 mesh than on the minus 48-mesh grind when up to 3 hours of agitation time were used.

In test 1-12 the amount of solvent was reduced from 400 ml to 300 ml. Dissolution of mercury was not affected, indicating that the ratio of solution to solids can be reduced and the pulp agitated at a higher density. This will be limited, however, by the requirements for sodium sulfide to react with cinnabar in the ore.

Mercury extractions obtained on sample No. 2 are quite similar to those obtained on the higher grade sample No. 1. Extractions on 48- and 65-mesh grinds were almost the same, extractions on the 65-mesh grind being slightly higher. When 3 percent solvent was used instead of 5 percent, extraction was approximately 3 percent lower when using leaching times of up to 4 hours. In a 5-hour leach, extraction was the same as for 4 hours with the 5 percent solvent.

One test run on a sample ground to minus 100 mesh gave a 98.6 percent extraction of the mercury after 1-1/2 hours of agitation. Extraction is the same as for 4 hours of agitation on minus 65-mesh ore. Determination of a balance between fineness of grind and agitation time to give maximum economic extraction is a problem to be worked out for each specific ore.

rapid mercury precipitation.

In the second test, results of which are shown in table 21, the impellor speed was increased to 186 rpm and, with a considerably smaller initial addition of aluminum powder, mercury precipitation was over 93 percent after 4 hours, and 95 percent after 7 hours of agitation. In both this and the previous test with aluminum powder, a considerable amount of mercury sulfide was formed. This test was shut down for a period of 17 hours. During this time most of the mercury sulfide redissolved and an assay of the solution shows a corresponding increase in the mercury content. Also, the free sodium hydroxide content was almost zero. Therefore, 3 grams of NaOH were added and agitation resumed. Because of the deficiency of aluminum and greater activity of sodium sulfide as a result of the sodium hydroxide addition, the mercury sulfide continued to redissolve as shown by the continuing increase in the mercury content of the solution. Addition of 0.25 gram of aluminum powder, after sample 4-10 was taken, was effective in stripping mercury from the solution, as shown by the assay of sample 4-11.

Table 21. Precipitation of mercury with aluminum powder using high-speed agitation

Solution No.	Precipitation time Hrs.	Precipitation time Min.	Mercury remaining in solution (grams per liter)	Mercury precipitated (percent)
	High-speed impellor-type agitation (186 rpm), 1.75 grams of aluminum powder			
4- 0	0	0	2.764	0.00
4- 1	1	0	0.245	91.17
4- 2	2	0	0.190	93.16
4- 3	3	0	0.168	93.96
4- 4	4	0	0.188	93.23
4- 5	5	0	0.209	92.47
4- 6	6	0	0.179	93.56
4- 7	7	0	0.139	95.01
	Agitation off for 17 hours			
4- 8	7	0	0.238	91.43
4- 9	10	0	0.278	89.98
4-10	11	40	0.301	89.15
4-11	12	45	0.026	99.10

For the third test, a small laboratory vibrating feeder was built to feed aluminum powder continuously to the pregnant solution. Results of this test are shown in table 22. In order to obtain more rapid precipitation of mercury, a reasonably large amount of aluminum powder should be added at the start of precipitation, with a small, continuous feed thereafter. At the start of this test, aluminum was insufficient to give rapid precipitation. Total aluminum powder added during the 8-hour agitation period was 3.28 grams, or 0.41 gram per hour. Continuous feed of aluminum powder did not appear to

These data indicate that most of the mercury will be recovered as liquid mercury metal. The amalgam of mercury and aluminum formed in a continuous plant operation can be returned to the precipitation circuit. As the aluminum is consumed, the mercury portion of the amalgam will then be released as liquid mercury. Therefore, only approximately 0.5 percent of the mercury precipitated will be in the form of mercury sulfide (with some entrained floured mercury). This small amount could be accumulated and retorted to recover the contained mercury.

PRECIPITATION WITH ALUMINUM POWDER

Tests were run using aluminum powder as precipitant for the mercury. These included impellor-type agitation, bottle-rolls agitation, and precipitation in a high-speed, 50-gram laboratory flotation machine.

Results of the first two series of tests, using aluminum powder and agitating the solution with an impellor-type agitator, are given in tables 20 and 21. In these tests there are two variables — speed of agitation and ratio of mercury to aluminum. In a third test series (table 22), using high-speed impellor agitation on a solution considerably higher in mercury concentration, the aluminum powder was fed continuously with a small vibrating feeder. Two liters of pregnant solution were used in each test of all three series. Head assay of the pregnant solution was 2.76 grams of mercury per liter for the first two series and 16.72 grams per liter in the third series.

Table 20. Precipitation of mercury with aluminum powder using low-speed agitation

Solution No.	Precipitation time Hrs.	Precipitation time Min.	Mercury remaining in solution (grams per liter)	Mercury precipitated (percent)
Low-speed impellor-type agitation (90 rpm), 3.78 grams of aluminum powder*				
3-0	0	0	2.764	0.00
3-1	2	0	1.468	46.89
3-2	4	20	0.481	82.60
3-3	20	5	0.424	84.66
3-4	23	5	0.021	99.24

* At the start of the test, 2.5 grams of aluminum were added, with an additional 0.5 gram added during the first agitation period. At the end of 4 hrs. and 20 min., another 0.5 gram was added and still another 0.25 gram at the end of 20 hrs., 5 min. of agitation.

From observations during the first two hours of the first test (table 20), it was apparent that the initial amount of aluminum powder was insufficient to give rapid precipitation of the mercury; therefore, staged additions of aluminum were made (see footnote to table 20). The final addition of aluminum was effective in stripping the solution down to 0.021 gram of mercury per liter, equivalent to 99 percent precipitation of the mercury. Speed of the impellor was not high enough, however, to give

Table 8. Agitation leaching of sample No. 3

High-grade opalite, Goldbanks district

Standard conditions: Size of sample — 200 grams
Head assay — 11.18 lb mercury per ton
Solution — 400 ml 5 percent solvent
Washes — 1: 50 ml 5 percent sol. + 100 ml H_2O
2: 25 ml 5 percent sol. + 100 ml H_2O
3: 100 ml H_2O

Test No.	Agitation time Hrs.	Agitation time Min.	Tailings Weight (grams)	Tailings Hg assay (lb per ton)	Hg extraction (percent)
Minus 48-mesh grind					
3- 1	2	0	199.2	1.40	87.53
3- 2	3	0	198.8	1.14	89.87
3- 3	4	0	198.8	1.14	89.87
3- 4	5	0	198.3	1.03	90.87
Minus 65-mesh grind					
3- 5	1	0	198.3	0.72	93.61
3- 6	2	0	198.4	0.52	95.38
3- 7	3	0	198.4	0.52	95.38
3- 8	4	0	198.5	0.62	94.49
3- 9	5	0	199.0	0.72	93.59

Table 9. Agitation leaching of sample No. 4

Low-grade opalite, Goldbanks district

Standard conditions: Size of sample — 200 grams
Head assay — 5.23 lb mercury per ton
Solution — 400 ml 5 percent solvent
Washes — 1: 50 ml 5 percent sol. + 100 ml H_2O
2: 25 ml 5 percent sol. + 100 ml H_2O
3: 100 ml H_2O

Table 9 - Continued

Test No.	Agitation time Hrs.	Agitation time Min.	Tailings Weight (grams)	Tailings Hg assay (lb per ton)	Hg extraction (percent)
			Minus 65-mesh grind		
4- 1	1	0	192.7	0.48	90.87
4- 2	2	0	197.6	0.35	93.88
4- 3	3	0	197.6	0.25	95.28
4- 4	4	0	197.5	0.30	94.43

Table 10. Agitation leaching of sample No. 5

Low-grade opalite, Ivanhoe district

Standard conditions:	Size of sample	200 grams
	Head assay	3.72 lb mercury per ton
	Solution	400 ml 5 percent solvent
	Washes	1: 50 ml 5 percent sol. + 100 ml H_2O
		2: 25 ml 5 percent sol. + 100 ml H_2O
		3: 100 ml H_2O

Test No.	Agitation time Hrs.	Agitation time Min.	Tailings Weight (grams)	Tailings Hg assay (lb per ton)	Hg extraction (percent)
5- 1	1	0	198.1	0.31	91.74
5- 2	1	30	197.7	0.21	94.42
5- 3	2	0	198.2	0.21	94.41
5- 4	3	0	198.0	0.21	94.41
5- 5	3	30	198.0	0.21	94.41
5- 6	4	0	198.1	0.26	93.08
			Minus 65-mesh grind		
5- 7	4	0	198.0	0.21	94.41

In the leaching of high- and low-grade opalite ores (tables 9, 10), results are quite similar. A 5-hour leach of minus 48-mesh high-grade ore gave one percent higher extraction than did a 4-hour leach. On the 65-mesh grind, extraction on the 5-hour leach was slightly lower than on the 4-hour leach (less than one percent lower). This is probably explained by the formation of more slimes during the longer leach time,

from 1/2 to 4 hours on the shaker, with 1.4 grams of 20-mesh granulated aluminum added to each test. The pregnant solution assayed 12.1 grams of mercury per liter. Each sample therefore contained 3.03 grams of mercury. Ratio of mercury to aluminum was 2.16:1. Results are given in table 19.

Table 19. Mercury precipitation, regeneration of sodium sulfide, and consumption of sodium hydroxide

Solution No.	Agitation time (hrs.)	Solution assays (grams per liter) Hg	Solution assays (grams per liter) Na_2S	Solution assays (grams per liter) NaOH	Mercury precipitated (percent)
13-0	0.0	12.105	-	-	0.00
13-1	0.5	2.06	40.09	7.69	82.98
13-2	1.0	1.36	41.40	6.35	88.76
13-3	1.5	0.49	42.22	6.19	95.95
13-4*	2.0	0.0015	42.43	5.42	99.99
13-5	3.0	0.0050	42.52	5.50	99.96
13-6	4.0	0.0015	42.51	5.50	99.99

*200 ml of solution used, instead of 250 ml.

In this series of tests, using a larger excess of aluminum metal than in the table 18 series, virtually 100 percent precipitation of the mercury was accomplished in 4 hours. Due to an error in measuring the solution, in sample 13-4, where ratio of mercury to aluminum was 1.73:1, precipitation was complete in 2 hours. Too large an excess of aluminum, however, is not desirable because sodium hydroxide also reacts with aluminum to form sodium aluminate, thus increasing both consumption of aluminum and loss of sodium hydroxide. The assays for sodium sulfide and sodium hydroxide show the amounts of sodium sulfide generated and amounts of sodium hydroxide consumed during precipitation of mercury with aluminum, thus substantiating the equation for precipitation.

In all of the foregoing precipitation tests, part of the mercury was recovered as liquid mercury, part of it as amalgam combined with the aluminum metal, and a small amount as black mercury sulfide (HgS). On solution sample No. 13-6, table 19, the distribution of mercury between these three products, and that remaining in the barren solution, was as follows:

	Grams	Percent
Mercury in pregnant solution (250 ml)	3.0262	100.00
Mercury recovered as liquid metal	2.6550	87.73
Mercury amalgamated with aluminum	0.3570	11.80
Mercury as HgS	0.0140	0.46
Mercury unprecipitated from barren solution	0.0003	0.01
Total accounted for	3.0263	100.00

curve for solution series No. 2 (fig. 1), indicates that precipitation in 4 hours would be 97 percent complete. This compares with 99.3 percent using high-speed agitation. In comparing results of the No. 2 and No. 6 series of tests, the rate of precipitation is considerably higher when using the high-speed agitation. In the No. 7 series, 2.5 grams of aluminum were insufficient to give complete mercury precipitation after 5 hours contact time.

In addition to results shown in table 17, tests using 20-mesh aluminum were run on considerably higher grade solutions to compare results at different mercury concentrations. These solutions were prepared by leaching cinnabar flotation concentrate in Na_2S-NaOH solution. A sample of 300 grams of concentrate assaying 51.25 percent mercury was leached to give 2 liters of pregnant solution which assayed 18.4 grams of mercury per liter. Results of these tests are given in table 18.

Table 18. Precipitation of mercury from high-grade solution with 20-mesh aluminum

Solution No.	Precipitation time Hrs.	Precipitation time Min.	Mercury remaining in solution (grams per liter)	Mercury precipitated (percent)
High-speed agitation (186 rpm), 10 grams of aluminum				
8-0	0	0	18.405	0.00
8-1	3	0	4.54	75.39
8-2	4	0	3.05	83.43
8-3	5	0	1.98	89.29
8-4	6	0	1.17	93.64
8-5*	7	0	-	-
8-6	8	0	0.43	97.66
8-7	9	0	0.29	98.42

*Sample lost

Although precipitation was quite rapid during the first 4 hours it was not complete at the end of 9 hours. This seems to be due to insufficient excess aluminum. Theoretically, to satisfy the equation $3\ (HgS\text{-}Na_2S) + 8NaOH + 2Al = 3Hg + 6Na_2S + 2NaAlO_2 + 4H_2O$, the 36.8 grams of mercury contained in the above solution would be precipitated by 3.30 grams of aluminum. Ratio of mercury to aluminum in the above series of tests was 3.68:1 as compared to the theoretical ratio of 11.15:1. In practice, however, to complete the precipitation within a reasonable length of time it is necessary to have a large excess of aluminum.

A series of six tests was then run to determine Na_2S regeneration, NaOH consumption, and Hg precipitation. Samples of 250 ml of solution were placed in 600 ml Erlenmeyer flasks and shaken for specified periods of time on a Burrell "Wrist Action" shaker. The samples were then filtered, and mercury, sodium sulfide, and sodium hydroxide concentrations determined on the filtrates. Times of precipitation were

which prevented as complete a washing of dissolved values from the filter cake. The tests indicate that 2 to 3 hours agitation time gives the highest extraction for a 65-mesh grind.

The ore of sample No. 5, although highly opalized, seems to leach more readily than the Goldbanks opalite. Maximum extraction on minus 48-mesh ore is attained after 1-1/2 hours of agitation. After 4 hours of agitation, extraction had dropped by 1.33 percent, again due to formation of more slimes and less efficient washing.

Table 11. Agitation leaching of sample No. 6

High-grade composite containing crystallized cinnabar

Standard conditions: Size of sample 200 grams; Solution 400 ml 5 percent solvent; Washes Standard 3 washes

Test No.	Agitation time Hrs.	Agitation time Min.	Tailings Weight (grams)	Tailings Hg assay (lb per ton)	Hg extraction (percent)
Head assay, 16.93 lb per ton (minus 10-mesh grind)					
6- 1	1	8	199.2	3.22	81.06
6- 2	4	0	199.0	0.51	97.00
6- 3	6	45	199.0	0.51	97.00
6- 4	8	0	198.8	0.51	97.01
6- 5	26	50	198.6	0.52	96.95
Head assay, 10.21 lb per ton (minus 20-mesh grind)					
6- 6	1	0	198.8	1.12	89.10
6- 7	2	0	198.8	0.61	94.06
6- 8	3	0	198.5	0.41	96.01
6- 9	4	0	198.6	0.31	96.99
Head assay, 10.21 lb per ton (minus 35-mesh grind)					
6-10	1	0	198.7	0.63	93.87
6-11	2	0	198.6	0.31	96.99
6-12	3	0	198.6	0.20	98.05
6-13	4	0	198.6	0.20	98.05

In leaching tests on ore sample No. 6, (table 11) a series of tests was first run on samples ground only to pass a 10-mesh screen because this ore contained coarse, crystalline cinnabar. In order to check further the leachability of this ore, a lower-grade sample was prepared by hand picking, and two series of leaching tests were run, one on minus 20-mesh samples, the other on minus 35-mesh samples. The purpose of hand picking lower grade ore was to determine whether there was much difference in the leachability of the relatively free cinnabar as compared to cinnabar that was finely disseminated throughout the gangue.

From the data given in table 11 it can be concluded that ores containing coarsely crystalline cinnabar, which is quite readily liberated from the gangue minerals, leach more readily and at a coarser grind than does cinnabar in opalite or chalcedony. Extraction of 97 percent of the mercury was obtained in 4 hours from material ground to pass 10 mesh. Extraction in 4 hours leaching time on minus 20-mesh low-grade ore was the same; however, the value in the tails was considerably lower on the low-grade material than on the minus 10-mesh high-grade material. On minus 35-mesh material, extraction was 98 percent in 3 hours leaching time.

Table 12. Agitation leaching of sample No. 7

Siliceous sinter from Cedar City, Utah

Standard conditions:	Size of sample	200 grams
	Head assay	6.70 lb mercury per ton
	Solution	400 ml
	Washes	Standard 3 washes

Test No.	Agitation time Hrs.	Agitation time Min.	Tailings Weight (grams)	Tailings Hg assay (lb per ton)	Hg extraction (percent)
5 percent solvent (minus 35-mesh grind)					
7- 1	1	0	198.5	0.05	99.26
7- 2	2	0	198.6	0.05	99.26
7- 3	3	0	198.5	0.05	99.26
7- 4	4	0	198.4	0.05	99.26
3 percent solvent (minus 35-mesh grind)					
7- 5	1	0	197.4	0.15	97.79
7- 6	2	0	197.2	0.10	98.53
7- 7	3	0	197.2	0.07	98.99
7- 8	4	0	197.8	0.07	98.99

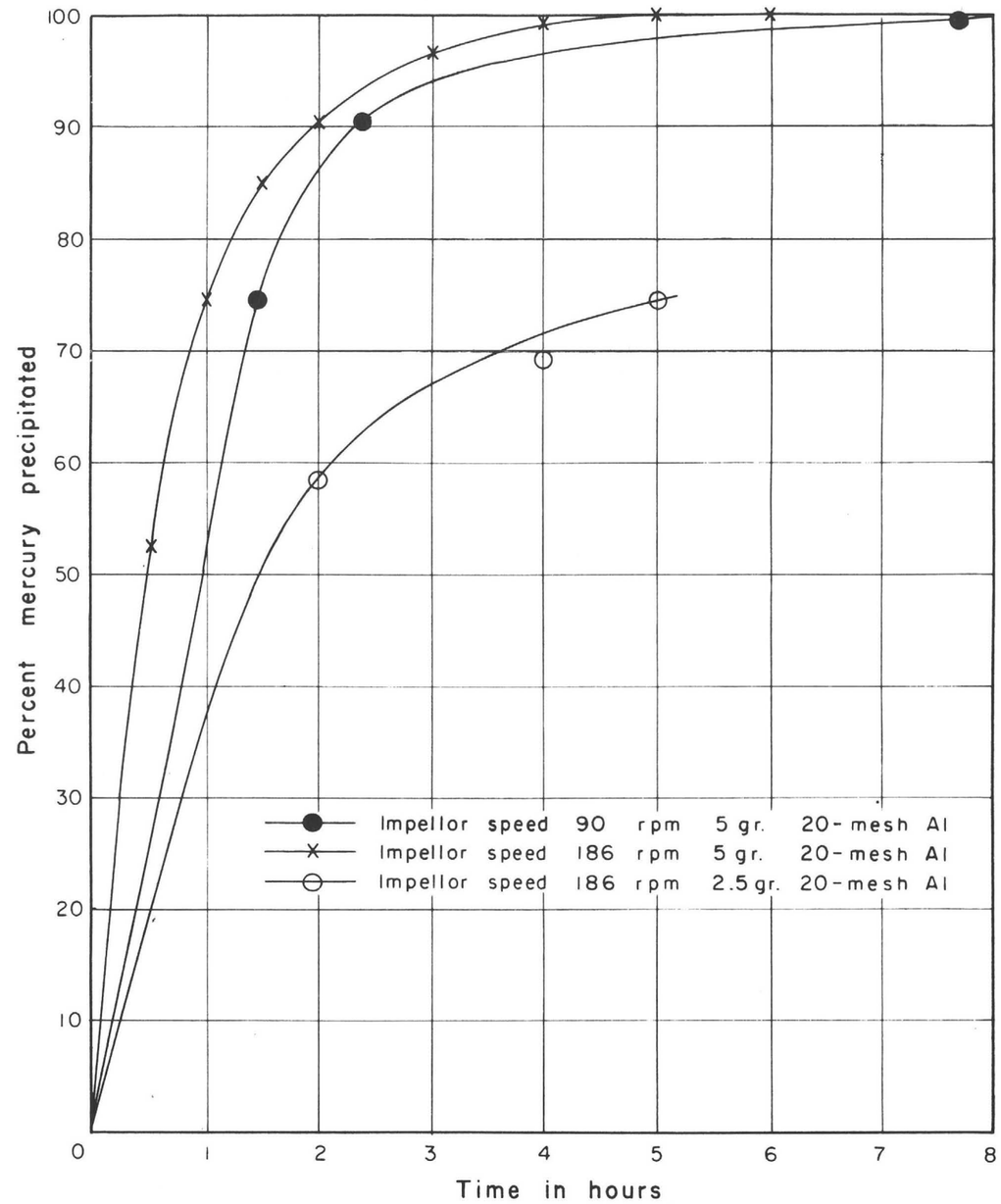

Figure 1. Effect of intensity of agitation and amount of aluminum on mercury precipitation with initial mercury concentration of 2.764 gr. per liter.

PRECIPITATION WITH 20-MESH GRANULATED ALUMINUM

A series of tests was run using 20- mesh granulated aluminum as precipitant. Variables in these tests included intensity and type of agitation, amount of granulated aluminum, time, and grade of solution.

The first of this series consisted of three tests in which 20-mesh granulated aluminum was used to precipitate mercury from 2-liter samples of solution. Mechanical agitation was by a 2.25-inch-diameter, 3-blade steel impellor. The variables in this series were amounts of aluminum and speed of the impellor. Results are shown in table 17, and comparisons of rates of precipitation are shown graphically in figure 1.

Table 17. Precipitation of mercury from low-grade solution with 20-mesh aluminum

Solution No.	Precipitation time Hrs.	Precipitation time Min.	Mercury remaining in solution (grams per liter)	Mercury precipitated (percent)
Slow-speed agitation (90 rpm), 5 grams of aluminum				
2-0	0	0	2.764	0.00
2-1	1	30	0.707	74.42
2-2	2	20	0.253	90.85
2-3	7	40	0.021	99.24
High-speed agitation (186 rpm), 5 grams of aluminum				
6-0	0	0	2.764	0.00
6-1	0	30	1.309	52.64
6-2	1	0	0.702	74.60
6-3	1	30	0.410	85.17
6-4	2	0	0.266	90.38
6-5	3	0	0.086	96.89
6-6	4	0	0.019	99.31
6-7	5	0	0.002	99.93
6-8	6	0	0.001	99.96
High-speed agitation (186 rpm), 2.5 grams of aluminum				
7-0	0	0	2.764	0.00
7-1	2	0	1.149	58.43
7-2	4	0	0.842	69.54
7-3	5	0	0.703	74.46

The slow-speed agitation apparently did not give sufficient contact between solution and the granulated aluminum to precipitate the mercury completely. The

Siliceous sinter type of ore leached very readily. Using 5 percent solvent, extraction from 35-mesh material exceeded 99 percent in 1 hour. Three percent solvent dissolved 1.5 percent less mercury in 1 hour. The one-hour leach with 5 percent solvent gave slightly higher mercury extraction than the 4-hour leach with 3 percent solvent.

Table 13. Agitation leaching of samples Nos. 8, 9, & 10

Standard conditions:		
	Size of sample	200 grams
	Grind	Minus 65 mesh
	Solution	400 ml 5 percent solvent
	Washes	Standard 3 washes
	Leaching time	4 hrs., 0 min.

Sample No.	Head assays-Hg (lb per ton)	Tailings Weight (grams)	Tailings Hg assay (lb per ton)	Hg extraction (percent)
8	11.93	193	0.41	96.56
9	1.98	198	0.07	96.52
10	1.03	200	0.05	95.02

Sample No.	Hg dissolved (grams)	Reagents consumed (grams) Na_2S	Reagents consumed (grams) NaOH	Reagents consumed (lbs/lb Hg ppt.) Na_2S	Reagents consumed (lbs/lb Hg ppt.) NaOH
8	1.20	0.47	1.10	0.39	0.92
9	0.22	0.21	0.17	0.94	0.76
10	0.11	0.23	0.71	2.09	6.45

Single 4-hour leaches only were run on samples Nos. 8, 9, and 10. Mercury extraction of 96.6 percent from No. 8, an opalite, is comparable to extractions obtained on the previous opalite samples. Considering the low mercury values in samples 9 and 10, extractions of siliceous sinter are excellent and are comparable with the results shown in table 12, which were obtained on the siliceous sinter ore of sample No. 7.

Percolation Leaching

Percolation leaching tests were run on samples Nos. 8 and 9, and on a slimy limonitic ore containing mercury (not described under "Ores Tested"). On these tests 1-kilogram samples of minus 1/4-inch ore were placed in glass percolation jars 14 inches high and 2.5 inches in diameter. This made a bed approximately 8 inches in depth. Five percent solvent (4 percent Na_2S, 1 percent NaOH) was used, ratio

of solution and washes to ore being the same as for the agitation leaches. Solution was poured on top of the bed and allowed to flow through, dripping out of the bottom of the jar. Rate of flow was controlled by a pinch-cock on a rubber discharge tube. The solution was led into a storage bottle and continuously pumped back to the top of the bed. The ore bed was kept covered with solution at all times.

Leach tests were run for 24 hours on all three samples and leaching was continued for 48 and 72 hours on samples Nos. 8 and 9. Very little blinding of the beds was evident and a free flow of solution was maintained throughout the leaching cycles. The only blinding which occurred was on the final water wash of the leach tailing of the limonitic ore. This occurred because of an inadvertent agitation of the slimy material on the top surface of the bed, permitting classification. Results of these tests are given in table 14.

Table 14. Results of percolation leaching tests

Sample No.	Percolation Time hrs.	Hg assays (lb per ton) Heads	Hg assays (lb per ton) Tailings	Hg extraction (percent)	Reagent consumption (lb per ton) Na_2S	Reagent consumption (lb per ton) NaOH
8	24	11.93	(4.33) (1)	63.7	1.2	2.4
	48		(3.61)	69.7	2.0	3.2
	72		3.27	72.6	10.3	4.3
9	24	1.98	(0.56)	71.7	4.0	6.4
	48		(0.52)	73.7	4.4	6.4
	72		0.44	77.8	8.5	7.7
Limonite	24	2.61	0.65	75.1	14.8	11.5

(1) Figures in parenthesis are calculated from solution assays.

Screen-assay analyses were run on the tailings from the 72-hour leaching of samples Nos. 8 and 9. Ninety-six percent of the mercury remaining in the tailings of sample No. 8 was in the plus 28-mesh sizes, and 85 percent of the loss in sample No. 9 was in the plus 28-mesh fractions. Therefore, a grind to minus 28 mesh would be necessary in order to obtain a high mercury extraction by percolation leaching. Ordinarily percolation leaching is not practical on material as fine as 28 mesh because of blinding by the slime fraction. In ore samples Nos. 8 and 9, however, relatively no primary slimes were present and only small amounts of slimes were formed during crushing and grinding.

It should be noted that consumption of both sodium sulfide and sodium hydroxide is high for the percolation leaches, as compared to agitation leaching (see table 13). This can probably be accounted for by the long contact time for percolation leaching with resultant formation of sodium silicates. Reagent consumption was high on the limonitic ore because of reaction with the iron oxide in the ore.

PRECIPITATION ON ALUMINUM SHOT

This test consisted of percolating the solution through a bed of aluminum shot. A conical glass tube with an iron screen in the bottom was used to retain the aluminum shot. The size of shot varied from a maximum of one-half inch to a minimum of one-quarter inch. A Sigmamotor laboratory pump was used to pump pregnant solution continuously into the top of the conical tube. Discharge from the tube went to a storage bottle. The flow rate of solution through the bed of aluminum shot was regulated so that the aluminum shot was covered with solution at all times. Two liters of solution assaying 2.764 grams mercury per liter were used on the test, and an initial charge of 5 grams of aluminum shot was added to the percolation tube. After the initial percolation of this solution through the bed of aluminum, an additional 5 grams of aluminum shot were added to the bed in the tube because of incomplete precipitation of mercury, and the solution was recycled through the system. Results of this test are given in table 16. Solution samples were taken during the two percolation periods and assayed for mercury.

Table 16. Precipitation of mercury on aluminum shot

Solution No.	Percolation time Hrs.	Percolation time Min.	Mercury remaining in solution (grams per liter)	Mercury precipitated (percent)
1-0	0	0	2.764	0.00
1-1	3	30	1.490	46.09
1-2	7	50	0.131	95.26
1-3 (1)	22	50	0.046	98.34
1-4	36	55	0.019	99.31

(1) Five grams aluminum shot added.

This method of precipitating mercury required too long a contact time in order to completely strip mercury from the solution. Apparently the surface area of the aluminum was insufficient to give adequate contact between solution and metal. In order to keep solutions in balance in a plant operating continuously, a 4-hour or shorter precipitation time cycle is desirable (where the leaching time is 4 hours). Otherwise, large solution storage and precipitation capacity would be needed.

In addition to mercury metal, the precipitate contained some floured mercury and a small amount of black mercury sulfide. Iron sulfide (FeS) also was formed. Hydrogen gas was evolved during precipitation, indicating direct reaction between the aluminum and sodium hydroxide in the solution. Further tests on this method of precipitation, using a long column of aluminum shot, might give effective precipitation in 4 hours or less. Because of the large volumes of solution required in such a test, this should be run on a continuous pilot plant operation.

filter area will be 274 square feet. A 10- X 10-foot drum filter will be large enough for this size mill.

Results of tests Nos. 2 and 3, show that although the cake-forming time was shorter for test No. 3 (45.0 seconds, as compared to 67.5 seconds), the weight of dry cake is essentially the same, indicating that no further cake is formed after 45 seconds. The shorter cake-forming time permits longer and more efficient washing, and the advantage of this is shown in the filtrate assays. As test No. 3 had a much more rapid drop in mercury values than test No. 2, the filtration time cycle of No. 3 is recommended.

PRECIPITATION OF MERCURY

In the past, two principal methods of precipitating mercury from sodium sulfide solutions have been suggested: electrolytic precipitation and precipitation on aluminum metal. Preliminary tests of electrolytic precipitation in the present investigation gave incomplete precipitation during a reasonable length of time and produced primarily floured mercury and black mercury sulfide. To obtain liquid mercury from these products it would be necessary to retort the precipitate. Bradley (1918) mentions the possibility of using zinc metal as a precipitant, but the few tests reported were not encouraging.

In the electrolytic precipitation of mercury from solution, as is true for all metals, current efficiency is high only when treating solutions high in metal-ion concentrations. As the metal ions are depleted, current efficiency drops rapidly because much of the electric current is consumed in the decomposition of water. Furthermore, it is virtually impossible to strip completely from solution the metal being precipitated. Any metal remaining in the precipitated (barren) solution will then lower the washing efficiency in a counter-current decantation system, and the last of the mercury would have to be stripped with aluminum, necessitating a double process. The decision was made, therefore, not to run electrolytic precipitation tests but a series of precipitation tests using aluminum.

A total of 14 precipitation tests were run on various solutions; some of the solutions were filtrates from leaching tests, others were prepared especially for precipitation tests. Four forms of aluminum metal were tested: shot, granulated, powdered, and sheet aluminum. Various methods of contacting the solutions with the aluminum were also tried; these methods are described later in this report.

From these precipitation tests it is concluded that under proper conditions 99 percent or more of the mercury will be precipitated in 4 hours of contact time. Granulated aluminum gave the best overall results, but fairly vigorous agitation was required in order to obtain sufficient contact between the aluminum and the solution. The highest mercury precipitation obtained in these tests was 99.99 percent after 4 hours of agitation. Descriptions and tabulated results of the various tests follow.

SETTLING TESTS

The settling of solids in pulps containing sodium sulfide and sodium hydroxide is different from settling in water, because the sulfide liquor has a fairly high viscosity. Also, when grinding in sulfide-hydroxide solution, a slime fraction is formed which is quite difficult to thicken or filter. This slime fraction is probably ferrous sulfide. Therefore, because of this difference, it was felt necessary to run preliminary settling and filtering tests.

Three series of settling tests were run, using the procedures described by Coe and Clevenger (1917), in order to estimate thickener areas and depths. Ore sample No. 2 was used for the settling tests because it contained more slime than the other samples, and therefore would be most difficult to settle. Pulp samples were prepared as follows:

Series 1. Twelve hundred grams of minus 10-mesh ore were ground in 1,200 ml of 5 percent solvent for 75 minutes in a laboratory-batch ball mill. Ball load was 6.9 kg, balls ranging in size from 1-1/4 down to 3/8 inch diameter. Three cylinders containing pulps were made up, the object being to start with solution-to-solids ratios of 4:1, 3:1, 2:1. Actual solution-to-solids ratios of these three cylinders were 3.57:1, 2.90:1, and 1.96:1, respectively. After running settling tests on the above pulps, solution-to-solids ratios were then reduced by removal of part of the clear solution, to give a total of three tests on each cylinder of pulp, or nine tests in all. On the third cylinder, compression zone was reached after removal of the first portion of clear solution, therefore the ninth test could not be made. The 75-minute grinding time was necessary on this series because 1,200 grams of ore overloaded the ball mill.

Series 2. Pulp was prepared by grinding each of two batches of 600 grams of ore with 600 ml of 5 percent solvent for 30 minutes, and then combining them. Settling tests were run as described above for series 1, although solution-to-solids ratios varied slightly from series 1.

Series 3. These tests duplicated series 2, except that, because of the slow settling rates of the previous two series, 0.05 lb of Separan 2610 (flocculating agent) per ton of ore was added to the grind in order to promote flocculation of slimes and faster settling of the solids.

Settling test series 1 gave a calculated thickener area of approximately 11 to 12 square feet per ton per 24 hours. It was extremely difficult to detect a definite slime line because fine slimes and ferrous sulfide formed during grinding remained in suspension. These two factors, plus the dark-brown color of the solution, made it difficult to obtain accurate readings of settling rates.

A small amount of Separan 2610 was added to flocculate the slimes and ferrous sulfide. This resulted in a much faster settling rate and a clear, supernatant liquor.

Readings of the slime line were still difficult to determine because of the dark color of the solution, but a definite slime line formed after the addition of Separan. Required thickener area was reduced to 4 to 5 square feet per ton per 24 hours.

In settling test series 2, using a 30-minute grind, thickener area was computed at 7.5 square feet per ton per 24 hours. The shorter grinding time gave less slimes and therefore more rapid settling. However, this area is large and the use of a flocculating agent was definitely indicated.

In settling test series 3, a 30-minute grind with 0.05 lb of Separan 2610 added per ton of ore gave a required area of 2.53 square feet per ton per 24 hours, and clear supernatant liquor. A mill operating on the basis of 100 tons per 24 hours would therefore require 25-foot diameter thickeners. The depth would be 10 feet as calculated from the densities of final thickener pulps. These pulps all thickened to 0.5 part of solution to 1.0 part of solids, or better, in 17 to 20 hours. This represents a thickened pulp containing 67 percent or more solids.

In addition to the above settling tests and determinations of thickener areas, two tests were run to determine how much of the mercury would be dissolved while the solids were settling in a thickener. Generally, in counter-current decantation calculations, such as the cyanidation of gold ores, it is assumed that no dissolution takes place during thickening. Because of the rapidity with which cinnabar dissolves in sodium sulfide solution, some dissolution may take place during thickening, since the ore is in contact with solution for as much as 20 hours in each thickener in a mill circuit.

Two 500-gram batches of ore sample No. 2 were ground in the laboratory ball mill in 500 ml of 5 percent solvent for 30 minutes. The first of these batches was immediately filtered, the filter cake washed, dried, and assayed. The second batch was transferred to a beaker and stirred gently by hand once each hour for 7 hours, so as to move the pulp around in the bottom of the beaker without completely mixing the pulp. The pulp was then allowed to stand overnight for a 14-hour period. This pulp was then filtered, the cake washed, dried, and assayed. Results of these tests were as follows:

Assay of heads	5.23 lb mercury per ton
Assay of No. 1 tails	0.15 lb mercury per ton
Assay of No. 2 tails	0.10 lb mercury per ton

During 21 hours of contact with sodium sulfide solution, dissolution of mercury amounted to 0.05 lb per ton, or 0.96 percent of the mercury contained in the head sample. In a counter-current washing circuit where three or more thickeners are used, this dissolution of mercury becomes a significant factor in increasing recovery.

FILTERING TESTS

Three series of filtering tests were run on pulps prepared from ore sample No. 2. The tests were run by the filtering method described in Taggart (1948) using a 0.1 square-foot filter leaf covered with canvas.

Test pulps were prepared by grinding 500-gram samples of minus 10-mesh ore for 30 minutes in 500 ml of barren stock solution. The ball mill and balls were then washed with an additional 500 ml of barren solution and the resulting pulps thickened until 500 ml of clear solution could be siphoned off. Thickened pulps for filtration tests then had a solution-to-solids ratio of 1:1. The barren solution was prepared by adding aluminum metal to a pregnant stock solution containing 6.60 grams of mercury per liter, thus precipitating the mercury. The barren solution contained 0.004 gram of mercury per liter.

Table 15. Results of filtration tests

Filtration time cycles (average of 3 tests)

Test No.	1	2	3
	Time in seconds		
Cake forming	67.5	67.5	45.0
Barren solution wash	67.5	67.5	80.0
Water wash	22.5	22.5	32.5
Draining	45.0	45.0	45.0
Cake discharge	22.5	22.5	22.5
Dead time (before picking up fresh cake)	45.0	45.0	45.0
TOTAL	270.0	270.0	270.0
Total time cycle (min.)	4.5	4.5	4.5

Filtration data (averages of 3 tests)

Test No.	1	2	3
Weight of wet filter cake (grams)	110.7	140.3	145.3
Weight of dry filter cake (grams)	87.7	115.3	118.7
Water in filter cake (percent)	24.4	17.8	18.3
Cake thickness (inches)	0.277	0.323	0.312
Solution mercury values (Hg gr per liter)			
Pregnant filtrate	-	6.60	6.76
Barren wash filtrate	-	5.69	2.12
Water wash filtrate	-	1.84	1.15
Vacuum (in. of Hg)	13.0	13.5	13.5

In the filtration tests, each test consisted of three individual runs with the filter test leaf, and the values given in each column of table 15 are averages of the three runs. In the first test (No. 1, table 15), pregnant filtrate and the filtrates from washing were not kept separate, therefore assays were not run on these solutions.

Average calculated filter area for the three tests (total of 9 runs) is 2.74 square feet per ton of ore filtered per 24 hours. For a plant treating 100 tons per day, required