CONTACT INFORMATION
Mining Records Curator
Arizona Geological Survey
416 W. Congress St., Suite 100
Tucson, Arizona 85701
602-771-1601
http://www.azgs.az.gov
inquiries@azgs.az.gov

The following file is part of the Grover Heinrichs Mining Collection

ACCESS STATEMENT

These digitized collections are accessible for purposes of education and research. We have indicated what we know about copyright and rights of privacy, publicity, or trademark. Due to the nature of archival collections, we are not always able to identify this information. We are eager to hear from any rights owners, so that we may obtain accurate information. Upon request, we will remove material from public view while we address a rights issue.

CONSTRAINTS STATEMENT

The Arizona Geological Survey does not claim to control all rights for all materials in its collection. These rights include, but are not limited to: copyright, privacy rights, and cultural protection rights. The User hereby assumes all responsibility for obtaining any rights to use the material in excess of "fair use."

The Survey makes no intellectual property claims to the products created by individual authors in the manuscript collections, except when the author deeded those rights to the Survey or when those authors were employed by the State of Arizona and created intellectual products as a function of their official duties. The Survey does maintain property rights to the physical and digital representations of the works.

QUALITY STATEMENT

The Arizona Geological Survey is not responsible for the accuracy of the records, information, or opinions that may be contained in the files. The Survey collects, catalogs, and archives data on mineral properties regardless of its views of the veracity or accuracy of those data.

HAZEN RESEARCH, INC.

4601 INDIANA STREET
GOLDEN, COLORADO • 80401
TELEPHONE 303/279-4501

HRI Project No. 979
Copy No. 3

METALLURGICAL AND ECONOMIC STUDIES OF A SILVER ORE

for

Earth Resources Company
P. O. Box 270
Golden, Colorado

August 20, 1971

By:

T. K. Miyoshi
Research Engineer

S. Zaman
Senior Research Engineer

W. H. Yarroll
Senior Research Engineer

Approved by:

A. W. Lankenau
Vice President

TABLE OF CONTENTS

	Page No.
Introduction and Summary	i
Ore Preparation and Analysis	1
Mineralogy	4
Experimental Procedures, Results and Discussion	5
Flotation	5
Cyanide Leach	9
Salt Roast - Acid Brine Leach	10
Design Criteria	11
Ore and Product Characterization	11
Grind	11
Flotation	12
Rougher	12
First Cleaner	12
Second Cleaner	12
Third Cleaner Flotation	12
Cyanide Leach	13
Leach Conditions	13
Thickening Area	13
Washing of Leached Residue	14
Zinc Dust Precipitation	14
Flowsheets and Material Balances	15
Preliminary Capital Cost Estimates for a 600 TPD Gold and Silver Flotation Plant	18

continued.....

TABLE OF CONTENTS (Continued)

	Page No.
Preliminary Operating Cost Estimate for a 600 TPD Flotation Plant	23
Direct Costs	24
Indirect Costs	27
Preliminary Capital Cost Estimate for a 600 TPD Cyanidation Plant	28
Preliminary Operating Costs for a 600 TPD Cyanidation Plant	32
Direct Costs	32
Indirect Costs	37
Appendix A	
Details of Preparation of Various Composites for Laboratory Tests	
Appendix B	
Details of Laboratory Flotation Tests	
Appendix C	
Details of Laboratory Cyanide Leach Tests	
Appendix D	
Details of Salt Roast-Acid Brine Leach of Composite A Ore	
Appendix E	
Material Balances for Cyanidation and Flotation Flowsheet at 600 Tons Per Day of Ore Feed	

INTRODUCTION AND SUMMARY

Earth Resources Company requested Hazen Research, Inc., to investigate the recovery of silver from core samples of three drill holes on their De Lamar, Idaho, prospect. Three composite samples were made up as follows for the investigation:

Sample Designation	Consisted of Selected Cores from Holes	Assay, oz/ton Au	Assay, oz/ton Ag
A	1,2	0.03	7.76
B	3	0.02	6.42
C	1,2,3	0.02	6.36

Preliminary tests of flotation, cyanidation, and salt roasting followed by acid brine leaching on Composite A indicated that flotation and cyanidation were the more promising methods of extraction. Tests on Composites B and C showed that they also responded well to these treatment procedures. Efforts were then directed toward bench scale test work on Composite C in order to optimize the extraction of gold and silver. This work yielded the following results:

	% Extraction Au	% Extraction Ag
Flotation	44.4	84.0
Cyanidation	75.0	96.0

A 12-cycle locked batch flotation test on minus 100-mesh ore using three cleaner stages produced a concentrate analyzing 304 oz/ton of silver and 0.44 oz/ton of gold.

The cyanidation results were achieved with a 48-mesh grind and a 72-hour leach retention time under good aeration conditions.

Preliminary capital and operating costs were prepared for plants capable of processing 600 tons of ore per day by flotation and cyanidation. These results are summarized as follows:

	Cyanidation	Flotation
Capital Cost	$3,252,000	$2,040,000
Operating Cost/Ton	4.16	3.14

The capital cost estimates do not provide for any unusual costs and do not provide for bringing roads or utilities to the plant site. The operating costs do not provide for home office administration, sales, research, depreciation, property taxes, insurance, royalties or property acquisition, mining or financing costs. Because of the short time available for the testing program, it was necessary to make certain assumptions relative to plant design.

ORE PREPARATION AND ANALYSIS

Three sets of drill core samples were received between June 23 and July 12, 1971 comprising a total of 324 samples. Table 1 below shows the drill holes with the identification number and date received.

Table 1

Samples of Gold-Silver Ore Received for Laboratory Investigation

Drill Hole No.	HRI No.	Total No. of Cores	Date Received
1	3808	139	6-23-71
2	3846	82	7-7-71
3	3869	103	7-12-71

The samples received were composited further as Composite A, B, and C. Tables 1, 2, and 3 in the Appendix indicate how the composites were prepared. It also shows the footage selected, silver content of that interval, and the calculated silver content of the composite. Table 2 below identifies the composite samples and shows the assays of gold and silver of each sample.

Table 2

Identification of Composite Samples and their Gold Silver Content

Composite	Drill Hole Nos.	Assay, oz/ton	
		Ag	Au
A	1 and 2	7.76	0.03
B	3	6.42	0.02
C	1, 2 and 3	6.36	0.02

Prior to compositing, the preliminary preparation of each core sample as received is shown in the flowsheet (Figure 1) below:

Flowsheet for Ore Preparation Prior to Making Composites

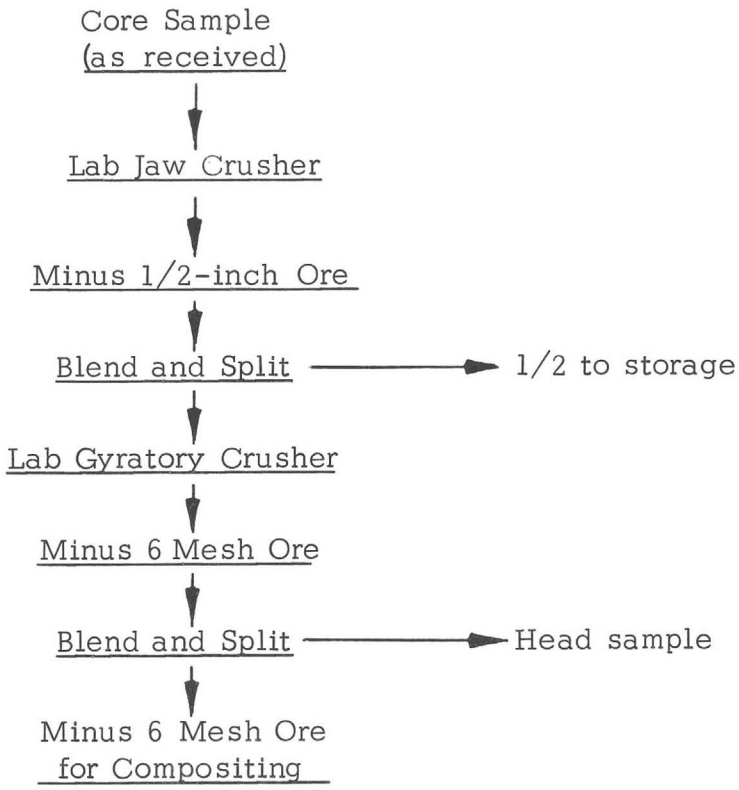

Figure 1

The results of a semiquantitative X-ray fluorescence spectrographic analysis of Composite C are shown in Table 3.

Table 3

Semiquantitative X-ray Fluorescence Spectrographic Analysis, Composite C
(Composite of Holes 1, 2, and 3)

Element	%	Element	%
Copper	0.010	Barium	0.068
Silver	0.040	Strontium	0.003
Zinc	0.006	Zirconium	0.028
Lead	0.011	Columbium	0.006
Arsenic	0.010	Chromium	0.002
Antimony	0.003	Manganese	0.007
Selenium	0.016	Yttrium	0.007
Iron	1.4		
Nickel	0.004		
Rubidium	0.019		

Note: The values above are estimated percentages for the metal equivalent of the indicated elements. No check was made for elements with atomic numbers less than 22 (below titanium).

MINERALOGY

The gold-silver ore from the De Lamar, Idaho prospect consists of highly altered porphyritic rhyolite that has been kaolinized and sericitized and then intensely silicified. Quartz is the major gangue mineral, and only minor amounts of feldspar, kaolinite, and sericite remain. Mineralization is related to the most intensely silicified portions of the rhyolite and to the many small late quartz veinlets which transect the rock.

Silver in the ore occurs mainly as naumannite (Ag_2Se) followed by argentite (Ag_2S), argentojarosite [$Ag\,Fe_3(SO_4)_2(OH)_6$], cerargyrite [$Ag(Cl, Br)$], and a trace of native silver and electrum [Ag & (Ag,Au)] in decreasing order. Table 4 below shows the relative percentage of silver minerals occurring in Composite C (Holes 1, 2, and 3 Composite) ore.

Table 4

Mineralogical Distribution of Silver in Composite C Ore

Mineral	Percentage of Total Silver
Naumannite	75 to 78
Argentite	15 to 20
Cerargyrite	1 to 2
Argentojarosite	2 to 4
Native silver & electrum	<1

A trace of native gold has been observed in the ore. The remaining part of the gold is probably in the form of electrum and in solid solution with naumannite.

The mineralogical study suggests that for good liberation, the ore should be ground to at least a nominal 100-mesh.

EXPERIMENTAL PROCEDURES, RESULTS AND DISCUSSION

Laboratory investigations on various composite samples of De Lamar prospect were made using three potential processing methods: flotation, cyanidation, and salt roast followed by acid brine leach.

FLOTATION

Details of laboratory tests are shown in the Appendix. Initially, the laboratory batch flotation tests were conducted on Composite A ore. The tests consisted of observing the susceptibility of silver and gold flotation of minus 100-mesh ground ore, using Minerec B, Barrett #4, and pine oil (Test F-1). Next, three more reagents, Aero Promoter 3477, Aerofloat 208, and Aerofloat 31, which are strong promoters for finely disseminated gold and silver minerals, were stage added (Test F-2). Results of Test F-2 showed an improvement of over 10% in silver recovery in the rougher concentrate as compared to the test with no additional reagent (Test F-1).

Next all of the reagents were added to the ball mill during grinding for better conditioning of gold-silver minerals. In Test F-3 using this procedure, 93.4% Ag was recovered in the rougher concentrates.

After satisfactory flotation of the silver minerals was obtained, the laboratory batch flotation test was continued on Composite A ore to observe the effect of successive cleaning on the grade and recovery of silver and gold concentrate. Rougher gold and silver concentrates were cleaned three times in Test F-4, maintaining the same reagent combinations as in other tests except the cleaner flotation. It has been possible to obtain a cleaner concentrate assaying 882 oz/ton Ag with a recovery of 81.4% Ag in the cleaned concentrate.

It was visually observed during laboratory tests that flotation with a pulp ground finer than 150-mesh was very slimy and the froth was difficult to control. Hence no further effort was made to evaluate quantitatively the flotation results of ore ground finer than 100-mesh.

Two other composite samples, Composite B (Composite of Hole 3) and Composite C (Composite of Holes 1, 2, and 3), were floated in the laboratory using similar conditions and combination of reagents (Tests F-5 and F-6) as that of Composite A (Test F-4). Response of these ore samples was excellent.

Once the flotation parameters were established, batch tests were made with Composite C to evaluate how much of the silver in the middling products in a batch, open-circuit test would report to the concentrate, and how much to the tail in a simulated closed circuit flotation test (locked-cycle test). In Test F-6, 11.3% of the silver was contained in three middling products: third cleaner tail (3.3% Ag), second cleaner tail (2.6% Ag), and first cleaner tail (5.4% Ag). Two series of locked cycle tests were made with Composite C.

Tables 5 and 6 show the summary of the results of 5-cycle (F-7) and 12-cycle (F-8) locked tests. Note that the middling products weight (5.6%) for the 5-cycle test decreases to 1.9% in the 12-cycle test. This decrease accounts for an additional recovery of approximately 4.0% of silver in the concentrate. The rougher tail losses for both tests are approximately the same.

Table 5

Results of 5-Stage Locked Cycle Flotation of Silver Ore
Sum of All Cycles
Test F-7

Composite C: (Holes 1, 2, and 3)

Products	Weight %	Assay oz/ton		Units		Distribution	
	Total	Au	Ag	Au	Ag	Au	Ag
Feed	-						
Third cleaner concentrate	1.42	1.09	398.8	0.0154	5.66	58.3	80.2
Rougher Tail	93.70	0.01	1.08	0.0094	1.00	35.6	14.2
Third cleaner tail	0.58	0.16	30.12	0.0001	0.17	0.4	2.4
Second cleaner tail	1.00	0.06	10.67	0.0006	0.11	2.3	1.6
First cleaner tail	3.30	0.03	3.29	0.0009	0.11	3.4	1.6
Calculated head	100.0	0.026	7.05	0.0264	7.05	100.0	100.0

Table 6

Results of 12-Stage Locked Cycle Flotation of Silver Ore
Sum of All Cycles (1-12)
Test F-8

Products	Weight %	Assay oz/ton		Units		Distribution	
	Total	Au	Ag	Au	Ag	Au	Ag
Feed	-	0.02	6.36	-	-	-	-
Third cleaner concentrate	1.81	0.44	304.36	0.0080	5.51	44.4	84.0
Rougher tail	96.16	0.01	1.02	0.0096	0.98	53.3	14.9
Third cleaner tail	0.18	0.12	19.64	0.0002	0.04	1.1	0.6
Second cleaner tail	0.53	0.02	3.74	0.0001	0.02	0.6	0.3
First cleaner tail	1.32	0.01	1.03	0.0001	0.01	0.6	0.2
Calculated head	100.0	0.018	6.56	0.0180	6.56	100.0	100.0

The total reagent consumption in the locked cycle tests was as follows:

Reagents (lb/ton of Ore)	To Ball Mill	1st Cleaner	2nd Cleaner
CaO	0.80	-	-
Aero Promoter 3477	0.20	0.05	0.05
Aerofloat 31	0.20	0.05	0.05
Aerofloat 208	0.20	0.05	0.05
Barrett #4	0.10	0.05	-
Minerec B	0.10	0.05	-
Pine Oil	0.03	-	0.03

CYANIDE LEACH

Agitation cyanide leaches under intense aeration conditions were run on all three composite ores. Variables studied were grind (minus 48-mesh vs. minus 100-mesh), and time of leaching (24, 48, and 72 hours).

Details of the cyanide leach tests are shown in the Appendix.

Table 7 summarizes the results of cyanide leach tests for the Composite C ore sample. Note that the silver extraction for 48-mesh ore at 72 hours is almost the same as that of 100-mesh ore for 72 hours.

Table 7

Summary of Cyanide Leach Test Results of Composite C Ore (Holes 1, 2, and 3)

Mesh Size	Leach Time Hours	% Extraction Ag	% Extraction Au	Assay oz/ton Residue Ag	Assay oz/ton Residue Au	Consumption NaCN lb/ton of Ore
48	72	96.0	75.0	0.26	<0.005	3.6
100	48	93.0	75.0	0.60	<0.005	3.8
100	72	95.7	75.0	0.27	<0.005	3.8

Most of the other variables were studied with the Composite A sample: grinding with cyanide versus addition of cyanide after grinding, and decanting water after grinding prior to addition of cyanide versus no decantation. Details of the comparison of silver extraction under these conditions are shown in the Appendix. No definite trend was observed.

SALT ROAST - ACID BRINE LEACH

Composite A ore was dry ground to minus 48-mesh and roasted at 400°C and 450°C in a laboratory rotary kiln with 3.0% NaCl. The roasted products were then leached in saturated NaCl solution at an acid pH of 1.5 for 4 hours.

The silver extraction in both cases was very poor as shown in Table 8.

Table 8

Results of Salt Roast-Acid Brine Leach (Composite A)

Test No.	Conditions	% Ag Extraction
RL-1	Salt roasting 400°C (1/2 hour) Acid-brine leach at pH 1.5 for 4 hours. Minus 48 mesh grind.	22.5
RL-2	Same as RL-1 Except roasting temp 450°C	38.8

DESIGN CRITERIA

ORE AND PRODUCT CHARACTERIZATION

The specific gravity of the dry ore and the final flotation concentrates as well as the bulk density of the ore are shown in Table 9.

Table 9

Bulk Density and Specific Gravity of Ore and Concentrates

Product	Specific Gravity	Bulk Density lb/cu ft
Ore (dry)	2.68	99.9
Final concentrate	2.85	105.5

GRIND

For design purposes, it is assumed the ore would be crushed to minus 3/8 inch prior to feeding the ball mill. A grind of minus 100-mesh is adequate for flotation. For cyanidation, the corresponding grind appears to be minus 48-mesh. Table 10 below shows the screen analysis of minus 48-mesh and minus 100-mesh ground product for Composite C ore.

Table 10

Screen Analysis of Minus 48- and Minus 100-mesh Ground Product (Composite C Ore)

	Minus 48-mesh Grind		Minus 100-mesh Grind	
Tyler Mesh	% Retained	Cum % Retained	% Retained	Cum % Retained
20x28	0.1	0.1	-	-
28x35	0.1	0.2	-	-
35x48	0.1	0.3	-	-
48x65	0.1	0.4	-	-
65x100	1.2	1.6	Tr	Tr
100x150	5.3	6.9	0.4	0.4
150x200	10.8	17.7	2.4	2.8
200x270	10.1	27.8	5.1	7.9
270x400	16.4	44.2	18.2	26.1
-400	55.8	100.0	73.9	100.0

The circulating load for the ball mill has been assumed to be 250%. For classification, a cyclone is used in closed circuit with the ball mill.

FLOTATION

Rougher

The rougher flotation feed containing 25 to 30% solids was satisfactory. For best results, reagents should be added during grinding. Visual observation of the rougher flotation froth indicates that the minerals float rather slowly, requiring 20 minutes of rougher flotation time.

First Cleaner

The first cleaner flotation time of 10 minutes at a solids content of 15-20% is necessary for efficient cleaning. It was observed in the laboratory, that if the first cleaner tail is thickened to 50% solids and conditioned for 30 minutes with additional reagents prior to adding to next cycle, the recovery of silver appears better. For commercial plant design, a thickener has been added for the first cleaner tail and a conditioner after the thickener, allowing 30 minutes conditioning time.

Second Cleaner

The percent solids of the second cleaner flotation pulp should be maintained much the same as the first cleaner with the same amount of reagents added. The flotation time is also 10 minutes for this stage of cleaning.

Third Cleaner Flotation

The time for third cleaner flotation is 8 minutes. With approximately 10% solids content of the pulp, the third cleaner flotation seems to work best without any addition of reagent. The percent weight of the final concentrate has been assumed from the laboratory locked cycle test (F-8) as 1.80% of the weight of the ore.

The final concentrates settle and filter rapidly although no quantitative data were obtained.

The overall flotation recovery of 84.0% Ag and 75% Au in the third cleaner concentrate has been assumed (Test F-8: 12-cycle locked test). The final concentrate contains 304.5 oz/ton of silver and 0.44 oz/ton of Au.

The SiO_2 content of the ore was determined to be 82.6% and the corresponding SiO_2 content of the final flotation concentrate was 44.6%.

CYANIDE LEACH

Leach Conditions

Laboratory results show good extraction of silver and gold by agitation cyanide leach at 25% solids content of the pulp and a grind of minus 48-mesh. Cyanidation of silver ores generally requires intense aeration, and this was used in all of the tests because of the limited time available for the testing program. For the design of a commercial plant it is suggested that Pachuca type agitator tanks be used. The best leaching time corresponding to minus 48-mesh grind was 72 hours. The pH of the pulp was maintained at 11.0 by adding 12.0 pounds of lime per ton of ore.

Reagent consumption:

	Total lb/ton of ore
NaCN	3.80
CaO	12.0
Separan NP-20	0.10

The silver and gold recoveries corresponding to the above leach conditions are 96.0 and 75.0%, respectively.

Thickening Area

A preliminary settling test of a pulp ground to 48-mesh with cyanide and lime indicated that a design figure of 4.5 square feet per ton per 24 hours would be adequate and that a thickened pulp density of 50% solids could be

achieved. In this test, 0.10 pound/ton of Separan NP-20 was added to assist the flocculation. Additional settling tests with various quantities and various flocculants might result in a somewhat lower area requirement.

Washing of Leached Residue

Based on the desired washing efficiency of 99.0% or better, a 5-stage countercurrent decantation circuit was calculated to be adequate with a wash ratio of 2.5 to 1. It has been assumed that the leached residue enters the first thickener at 25% solids and all thickener underflows are 50% solids.

Zinc Dust Precipitation

Although no laboratory test work has been done on zinc dust precipitation of silver from these cyanide solutions we have assumed, based upon information similar to the Merrill-Crowe process, a nominal zinc dust consumption of 0.6 oz per ounce of silver precipitated. The efficiency of zinc precipitation of silver is assumed to be 100%.

FLOWSHEETS AND MATERIAL BALANCES

Suggested flowsheets for both the cyanide and flotation plants are shown in Figures 2 and 3. Material balances for these flowsheets at a feed rate of 600 tons of ore per day are shown in the Appendix.

FLOWSHEET FOR 600 TON-PER-DAY GOLD-SILVER CYANIDATION PLANT

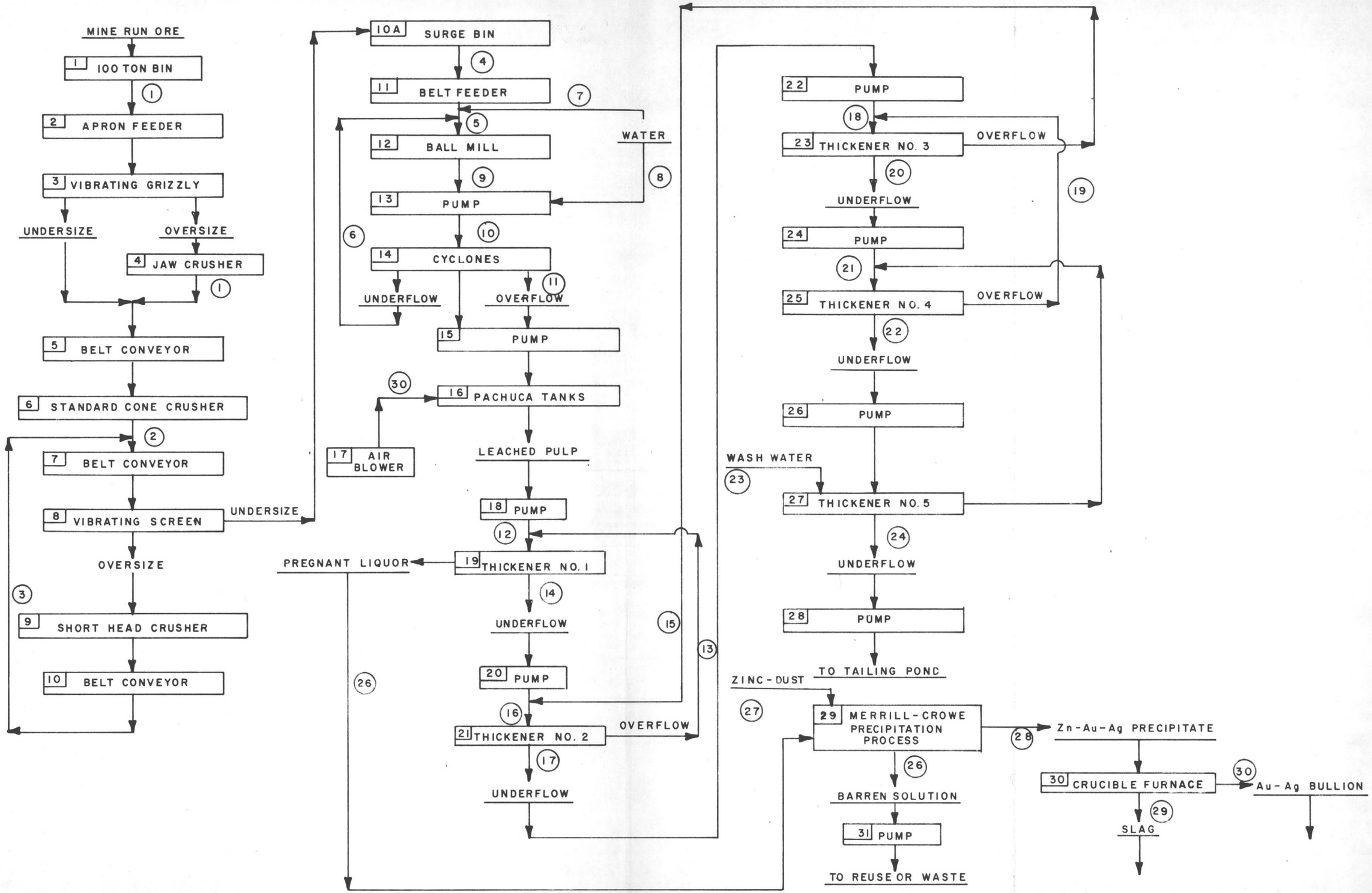

FIGURE 2

FLOWSHEET FOR 600 TON-PER-DAY GOLD - SILVER FLOTATION PLANT

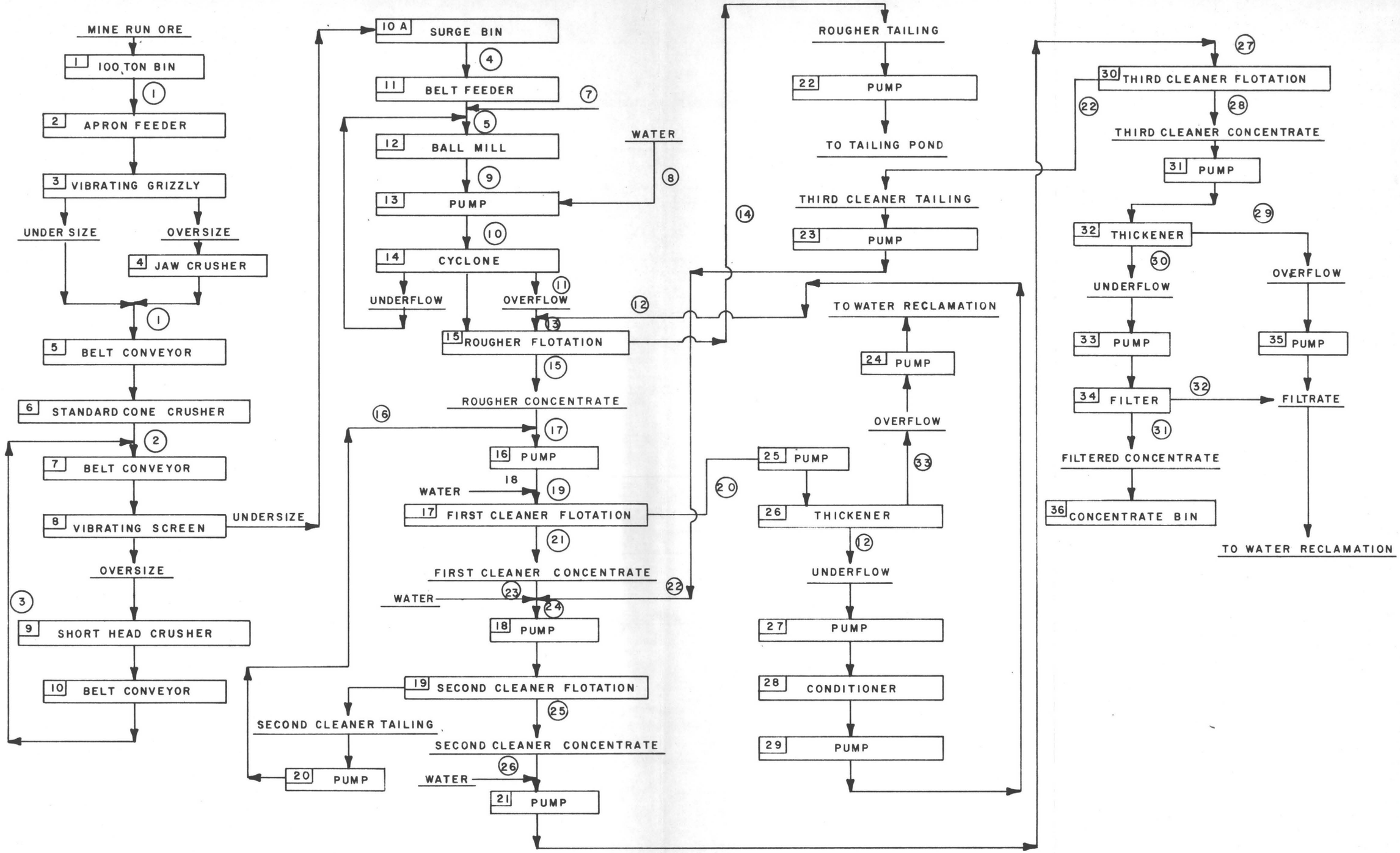

FIGURE 3

PRELIMINARY CAPITAL COST ESTIMATES FOR A 600 TPD GOLD AND SILVER FLOTATION PLANT

In this plant as in the cyanide plant, a crushing plant adequate to handle open pit ore on a one shift per day basis was estimated. It was also assumed that the mine would operate 5 days per week. The crushing plant would be fed with a front-end loader from a stockpile near the receiving hopper on the weekend. Both the flotation and cyanidation plants were assumed to operate 7 days per week with an on-stream time of 350 days per year.

The preliminary capital estimate for a flotation plant using new equipment is presented in Table 11.

Table 11

Preliminary Capital Cost of a Flotation Plant
(600 Tons Per Day Ore Feed)

Direct Material and Labor Costs	
Equipment cost + installation labor + installation materials = M + L (includes freight and sales tax)	$1,163,400
Equipment cost	(548,600)
Indirect Costs	
Construction overhead, 0.173 (M + L)	201,300
Engineering, 0.10 (M + L)	116,400
Site preparation, 7% of equipment cost	38,500
Buildings	90,000
Mobile equipment	50,000
Contractors fee	60,000
Spare parts, 5% of equipment cost	27,400
Working capital	108,000
Total	$1,855,000
Contingency, 10%	185,000
	$2,040,000

This estimate does not provide for any unusual costs and does not provide for bringing utilities or roads to the plant site. The grinding mill was sized by assuming a medium hardness of the ore.

Table 12 gives a description of the processing equipment items and their cost.

Table 12

Preliminary Equipment List for a 600 TPD Gold and Silver Flotation Plant

Item No.	Description	Horse-power	Equipment Cost	Installation Factor	Installed Cost
1	100-ton steel receiving bin	-	$ 9,000	2.0	$ 18,000
2	5'x12' apron feeder with 5 hp motor and drive	5	20,000	1.65	33,000
3	3'x6' vibrating grizzly with 5 hp motor and drive	5	3,300	1.65	5,450
4	32"x40" jaw crusher with 150 hp motor and drive	150	52,700	2.0	105,400
5	24"x50' belt conveyor, enclosed with walkway and with 10 hp motor and drive	10	9,700	1.65	16,000
6	4-1/4' standard cone crusher with 150 hp motor and drive	150	61,000	2.0	122,000
7	30"x 50' belt conveyor, enclosed with walkway and with 15 hp motor and drive	15	11,100	1.65	18,320
8	6' x14' double-deck vibrating screen with 10 hp motor and drive	10	9,700	1.65	16,000
9	4' shorthead crusher with 150 hp motor and drive	150	70,000	2.0	140,000
10	18"x 50' belt conveyor enclosed with walkway and 5 hp motor and drive	5	7,500	1.65	12,370

Table 12 (2 of 4 pages)

Item No.	Description	Horse-power	Equipment Cost	Installation Factor	Installed Cost
10A	750-ton steel surge bin	-	$ 31,000	2.0	$ 62,000
11	36" x 10' ore feeder with 2 hp variable speed motor and drive	2	4,000	1.65	6,600
12	9' x 9' ball mill, with switch-gear, 450 hp motor and drive, and 36-ton original ball charge	450	152,000	2.5	380,000
13	8" x 6" SRL centrifugal pump with guard and 30 hp motor and drive	30	2,600	2.4	6,240
14	Four 12" hydraulic cyclones	-	5,700	2.0	11,400
15	10-cell No. 30 D.E. flotation machine with five 20 hp motors and drives, and 600 cfm blower with 5 hp motor and drive	105	36,600	2.5	91,500
16	2-1/2" x 2" SRL centrifugal pump with guard and 7.5 hp motor and drive	7.5	900	2.4	2,160
17	4-cell No. 18 Sp. D.E. flotation machine with two 7.5 hp motors and drives	15	5,000	2.5	12,500
18	1-1/4" x 1" SRL centrifugal pump with guard and 1 hp motor and drive	1	600	2.4	1,440
19	2-cell No. 12 D.E. flotation machine with one 2 hp motor and drive	2	2,000	2.5	5,000
20	1-1/4" x 1" SRL centrifugal pump with guard and 1 hp motor and drive	1	600	2.4	1,440

Table 12 (3 of 4 pages)

Item No.	Description	Horse-power	Equipment Cost	Installation Factor	Installed Cost
21	1-1/4" x 1" SRL centrifugal pump with guard and 1 hp motor and drive	1	$ 600	2.4	$ 1,440
22	5" x 5" SRL centrifugal pump with guard and 15 hp motor and drive	15	1,600	2.4	3,840
23	1-1/4" x 1" SRL centrifugal pump with guard and 1 hp motor and drive	1	600	2.4	1,440
24	1-1/2" x 1-1/4" SRL centrifugal pump with guard and 3 hp motor and drive	3	800	2.4	1,920
25	2-1/2" x 2" SRL centrifugal pump with guard and 3 hp motor and drive	3	900	2.4	2,160
26	34' dia x 10' thickener with mechanism and 2 hp motor and drive	2	17,000	1.55	26,350
27	2" Simplex diaphragm pump with 1 hp motor and drive	1	1,300	2.4	3,120
28	4' x 5' conditioner with mechanism and 3 hp motor and drive	3	2,200	1.55	3,410
29	2" Simplex diaphragm pump with 1 hp motor and drive	1	1,300	2.4	3,120
30	2-cell No. 12 D.E. flotation machine with one 2 hp motor and drive	2	2,000	2.5	5,000
31	1-1/4" x 1" SRL centrifugal pump with guard and 1 hp motor and drive	1	600	2.4	1,440

Table 12 (4 of 4 pages)

Item No.	Description	Horse-power	Equipment Cost	Installation Factor	Installed Cost
32	10' dia x 7' thickener with mechanism and 2 hp motor and drive	0.5	$ 6,800	1.55	$ 10,540
33	1" Simplex diaphragm pump with 0.5 hp motor and drive	0.5	1,200	2.4	2,880
34	4' dia x 2' drum filter, with 1 hp motor and drive, vacuum pump, blower, filtrate receiver, moisture trap, filtrate pump, and motors and drives	3	9,200	1.60	14,720
35	1-1/4" x 1" SRL centrifugal pump with guard and 1 hp motor and drive	1	600	2.4	1,440
36	50-ton steel concentrate bin	-	6,900	2.0	13,800
		1151.5	$548,600		$1,163,440

PRELIMINARY OPERATING COST ESTIMATE FOR A 600 TPD FLOTATION PLANT

A summary of the preliminary operating costs is shown in Table 13.

Table 13

Flotation Plant Operating Cost Summary

Cost Category	Cost Per Year	Cost Per Ton of Ore
Direct costs	$550,506	$2.63
Indirect costs	107,094	0.51
Total	$657,600	$3.14

These costs are based on 210,000 tons of ore per year. They do not include home office administration, sales, research, depreciation, property taxes, insurance, royalties, or financing costs.

The details of this estimate are presented in the following sections.

Direct Costs

Raw Materials

The cost of ore mining is not included in this estimate.

Labor, operating

Labor costs are based on the plan of 4 men covering one job with each man working an average of 42 hours per week for 43 hours pay. Hours paid for per man-year would be:

$$\frac{43 \times 365}{7} = 2,242 \text{ hours/man-year}$$

Hourly and annual wage rates for mill personnel are approximately as follows:

	Per Hour	Per Man-Year
Shift Foremen	$4.31	$9,663
Skilled Operators	3.75	8,408
Semi-skilled Operators	3.63	8,138
Common Labor	3.13	7,017
Maintenance Men	4.13	9,259

Plant Section	Job Title	No. Men on Shift D	S	G	T	Cost Per Man-Year	Year
General	Shift foreman	1	1	1	4	$9,663	$38,652
Crushing	Crushing plant operator	1	0	0	1	8,138	8,138
Main Plant	Grinding & flotation oper.	1	1	1	4	8,408	33,632
	Grinding & flotation helper	1	1	1	4	7,017	28,068
	Total Labor, Operating	4	3	3	13	$8,345	$108,490

Supervision

Superintendent - $18,000 per year

Maintenance

Based on an estimated cost of about 4% of the capital cost per annum, divided about equally between materials and labor:

		Cost Per Year
Materials:	$2,040,000 x 0.02 =	$40,800
Labor:	$2,040,000 x 0.02 =	40,800
	Total Maintenance Cost	$81,600

Plant Supplies

		Cost Per Year
Mill liners: 0.29 x 210,000 x $0.30	=	$18,270
Grinding balls: 2.0 x 210,000 x $0.125	=	52,500
Total Grinding Media	=	$70,770

Flotation Reagents:

Reagent	Lb/Ton of Ore	Price/Lb	Cost/Ton
Quicklime	0.80	$0.025	$0.020
Aero Promoter 3477	0.30	0.530	0.159
Aerofloat 31	0.30	0.385	0.116
Aerofloat 208	0.30	0.370	0.111
Barrett No. 4	0.15	0.120	0.018
Minerec B	0.15	0.510	0.077
Pine oil	0.06	0.230	0.014
Separan NP-20	0.10	1.100	0.110
		Total	$0.625

210,000 x $0.625 = $131,250 per Year

Other Supplies:

For such items as gaskets, pump packing, lubricants, lubricating devices, charts and other recording instruments supplies, fuel for mobile equipment, sanitary supplies, and all other supplies distinguished from maintenance materials by their characteristic of being required on a routine basis while a plant is operating. Expenses incurred for such items may normally be approximated as an amount equivalent to 15% of annual maintenance costs.

$81,600 x 0.15 = $12,240 per Year

Summary of Plant Supplies:

Grinding Media	$70,770
Flotation Reagents	131,250
Other Supplies	12,240
Total Plant Supplies	$214,260

Royalties and Patents

No royalty or licensing fee would be required for this process.

Utilities

Electric Power

Based on 1 hp requiring 1 kw to allow for distribution and motor efficiency losses, and miscellaneous uses such as lighting. Cost has been assumed at $0.01 per kwhr.

1,151.5 x 24 x 350 x $0.01 = $96,726 per Year

Natural Gas

Based on an estimated cost of $0.08 per ton of ore milled, assuming a natural gas cost of about $0.40 per 1,000 cubic feet or 1,000,000 Btu.

210,000 x $0.08 = $16,800 per Year

Water

Of about 346 gpm of process water estimated to be required, about 55 gpm should be reclaimable, leaving about 291 gpm of makeup water to be furnished. Well water at a cost of $0.10 per 1,000 gallons has been assumed. Should it prove possible to recycle water from the tailings pond, the makeup water would be reduced to about 40 gpm and the cost per ton of ore by about $0.05.

Summary of Utilities

Electric Power	$96,726
Natural Gas	16,800
Water	14,630
Total Utilities	$128,156

Summary of Direct Costs

Item of Cost	Cost per Year	Cost per Ton of Ore (1)
Raw Material	(2)	(2)
Labor, Operating	$108,490	$0.52
Supervision	18,000	0.09
Maintenance	81,600	0.39
Plant Supplies	214,260	1.02
Royalties & Patents	(3)	(3)
Utilities	128,156	0.61
Total Direct Costs	$550,506	$2.63

(1) Based on 210,000 tons of ore per year
(2) Not included in this estimate
(3) Not required for this process

Indirect Costs

Payroll Overhead

For all company expense incurred through pensions, paid vacations, hospitalization and life insurance, sick leave and disability pay, social security, unemployment taxes, housing subsidies, and any other fringe benefits 35% has been used in this estimate.

Type of Labor	Cost per Year	No. of Men
Operating	$108,490	13
Supervision	18,000	1
Maintenance	42,520	5
Laboratory	20,400	2
Overhead	12,000	1
Total Payroll	$201,410	22

$201,410 x 0.35 = $70,494 per Year

Laboratory

Fire Assayer	$12,000
Sample Preparation Man	8,400
Chemicals & Supplies	3,000
Total Laboratory	$23,400

Plant Overhead

Accountant	$12,000
Stationery Supplies, telephone, office machine service	1,200
Total Plant Overhead	$13,200

Summary of Indirect Costs[1/]

Item of Cost	Cost Per Year	Cost Per Ton of Ore
Payroll Overhead	$70,494	$0.34
Laboratory	23,400	0.11
Plant Overhead	13,200	0.06
Total Indirect Costs	$107,094	$0.51

1/ The cost of shipping concentrate to the smelter has not been included here.

PRELIMINARY CAPITAL COST ESTIMATE FOR A 600 TPD CYANIDATION PLANT

The costs of a cyanidation plant using the same conditions and limitations previously outlined with the estimate for the flotation plant are presented in Table 14.

Table 14

Preliminary Capital Cost of a Cyanidation Plant
(600 Tons Per Day Ore Feed)

Direct Material and Labor Costs	Installation
Equipment cost + installation cost + installation materials = M + L (includes freight and sales tax)	$1,883,500
Include Equipment cost 963,600	~~(963,600)~~
Indirect Costs	
Construction overhead, 0.173 (M+L)	325,800
Engineering, 0.10 (M+L)	188,000
Site preparation, 7% of equipment cost	67,500
Buildings	150,000
Mobile equipment	50,000
Contractor's fee	90,000
Spare parts, 5% of equipment costs	48,200
Working capital	153,000
Total	$2,956,000
Contingency, 10%	296,000
	$3,252,000

Installation

Total less equip

The product from this plant would be a mixed silver and gold bullion.

Table 15 gives a description of the processing equipment items and their cost.

964,000 equip

Table 15 (1 of 3 pages)

Preliminary Equipment List for a 600 TPD Gold and Silver Cyanidation Plant

Item No.	Description	Horse-power	Equipment Cost	Installation Factor	Installed Cost
1	100-ton steel receiving bin	-	$ 9,000	2.0	$ 18,000
2	5'x12' apron feeder with 5 hp motor and drive.	5	20,000	1.65	33,000
3	3'x6' vibrating grizzly with 5 hp motor and drive	5	3,300	1.65	5,450
4	32"x40" jaw crusher with 150 hp motor and drive	150	52,700	2.0	105,400
5	24"x50' belt conveyor, enclosed with walkway and with 10 hp motor and drive	10	9,700	1.65	16,000
6	4-1/4' standard cone crusher with 150 hp motor and drive	150	61,000	2.0	122,000
7	30"x50" belt conveyor, enclosed with walkway and with 15 hp motor and drive	15	11,100	1.65	18,320
8	6'x14' double deck vibrating screen with 10 hp motor and drive	10	9,700	1.65	16,000
9	5' shorthead crusher with 200 hp motor and drive	200	73,000	1.95	139,900
10	18"x50' belt conveyor enclosed with walkway and with 5 hp motor and drive	5	7,500	1.65	12,370

Table 15 (2 of 3 pages)

Item No.	Description	Horse-power	Equipment Cost	Installation Factor	Installed Cost
10A	750-ton steel surge bin	-	$31,000	2.0	$62,000
11	36"x10' ore feeder with 2 hp variable speed motor and drive	2	4,000	1.65	6,600
12	8'x6' ball mill with 250 hp motor and drive, switchgear, and 19 tons balls	250	93,000	2.5	231,000
13	8"x6" SRL centrifugal pump with guard and 30 hp motor and drive	30	2,600	2.4	6,240
14	Four 12" hydraulic cyclones		5,700	2.0	11,400
15	5"x5" SRL centrifugal pump with guard and 30 hp motor and drive	20	1,600	2.4	3,840
16	Five 300,000 gallon steel tanks	-	242,000	2.0	484,000
17	5000 cu ft/min centrifugal turbo air blower at 27 psi back pressure with 800 hp motor and drive	800	61,000	2.5	152,000
18	5"x5" SRL centrifugal pump with 20 hp motor, drive, and guard	20	1,600	2.4	3,840
19	65' dia thickener with rake mechanism, 3 hp motor and drive	3	42,000	1.55	65,100
20	2-1/2"x2" SRL centrifugal pump with guard and 7.5 hp motor and drive	7.5	900	2.4	2,160
21	65' dia thickener with rake mechanism and 3 hp motor and drive	3	42,000	1.55	65,100
22	2-1/2"x2" SRL centrifugal pump with guard and 7.5 hp motor and drive	7.5	900	2.4	2,160

Table 15 (3 of 3 pages)

Item No.	Description	Horse-power	Equipment Cost	Installation Factor	Installed Cost
23	65' dia thickener with rake mechanism and 3 hp motor and drive	3	$42,000	1.55	$65,100
24	2-1/2"x2" SRL centrifugal pump with guard and 7.5 hp motor and drive	7.5	900	2.4	2,160
25	65' dia thickener with rake mechanism and 3 hp motor and drive	3	42,000	1.55	65,100
26	2-1/2"x2" SRL centrifugal pump with guard and 7.5 hp motor and drive	7.5	900	2.4	2,160
27	65' dia thickener with rake mechanism and 3 hp motor and drive	3	42,000	1.55	65,100
28	2-1/2"x2" SRL centrifugal pump with guard and 7.5 hp motor and drive	7.5	900	2.4	2,160
29 30	Cyanide precipitation system with crucible furnace	30	48,000	2.0 (est)	96,000
31	5"x5" SRL centrifugal pump with guard and 20 hp motor and drive	20	1,600	2.4	3,840
	Total	1,774.5	$963,600		$1,883,500

PRELIMINARY OPERATING COSTS FOR A 600 TPD CYANIDATION PLANT

A summary of the preliminary operating costs is shown in Table 16.

Table 16

Cyanidation Plant Operating Cost Summary

Cost Category	Cost Per Year	Cost Per Ton of Ore
Direct Costs	$754,192	$3.59
Indirect Costs	118,771	0.57
Total	$872,963	$4.16

As in the case of the operating cost estimate for the flotation plant, this estimate is based on 210,000 tons of ore per year and does not include home office administration, sales, research, depreciation, property taxes, insurance, royalties, or financing costs.

The details of this estimate follow.

Direct Costs

Raw Materials

The cost of ore mining is not included in this estimate.

Labor, Operating

Labor costs are based on the plan of 4 men covering one job with each man working an average of 42 hours per week for 43 hours pay. Hours paid per man-year would be:

$$\frac{43 \times 365}{7} = 2,242 \text{ hrs/man-year}$$

Hourly and annual wage rates in the area under consideration are approximately as follows:

	Per Hour	Per Man-Year
Shift Foreman	$4.31	$9,663
Skilled Operators	3.75	8,408
Semi-skilled Operators	3.63	8,138
Common Labor	3.13	7,017
Maintenance	4.13	9,259

Plant Section	Job Title	No. Men on Shift D	S	G	T	Cost Per Man-Year	Year
General	Shift Foreman	1	1	1	4	$9,663	$38,652
Crushing	Operator	1			1	8,138	8,138
Grinding & Leaching	Operator	1	1	1	4	8,408	33,632
CCD&Ppt	Attendant	1	1	1	4	8,138	32,552
		4	3	3	13	$8,690	$112,974

Supervision

Superintendent - $18,000 per Year

Maintenance

Based on an estimated cost of 4% of the capital cost per annum, divided about equally between materials and labor.

		Cost Per Year
Materials	$3,252,000 x 0.02 =	$65,000
Labor	$3,252,000 x 0.02 =	65,000
Total Maintenance Cost	=	$130,000

Plant Supplies

		Cost Per Year
Mill Liners	: 210,000TPY x 0.12 lb/T x $0.30/lb =	$7,560
Grinding Balls	: 210,000TPY x 0.8 lb/T x $0.125/lb =	$21,000
		$28,560

Reagents for Cyanidation

Reagent	Total Lb/Ton of Ore	Price $/Lb	Total Cost $/Ton of Ore
NaCN	3.80	0.220	0.836
CaO (lime)	12.00	0.025	0.300
Separan NP-20	0.10	1.100	0.110
Zinc Dust	0.25	0.27	0.068
			1.314
	Cost Per Year at 210,000 Tons Per Year		$275,940

Crucible Reagents

Reagent	Total Lb/Ton of Ore	Price $/Lb	Total Cost $/Ton of Ore
Borax	0.049	0.051	0.0024
$NaHCO_3$	0.024	0.390	0.0093
Silica Sand	0.024	0.014	0.0003
			0.0120
	Cost Per Year at 210,000 Tons Per Year		$2,520

Other Supplies

For such item as gaskets, pump packing, lubricants, lubricating devices, charts and other recording instrument supplies, fuel for mobile equipment, sanitary supplies, and all other supplies distinguished from maintenance materials by their characteristic of being required on a routine basis while a plant is operating. Expense incurred for such items may normally be approximated as amount equal to 15% of the annual maintenance costs.

$130,000 x 0.15 = $19,500 per Year

Summary of Plant Supplies:

Grinding Media	$28,560
Cyanidation Reagents	$275,940
Crucible Reagents	$ 2,520
Other Supplies	$19,500
Total Per Year	$326,520

Royalties and Patents

No royalty or licensing fee would be required for this operation.

Utilities

Electric Power

Based on 1 hp requiring 1 kw to allow for distribution and motor efficiency losses, and miscellaneous uses such as lighting. Cost has been assumed at $0.01 per kwhr.

1724.5 x 24 x 350 x $0.01 = $144,858 per Year

Natural Gas

Based on an estimated cost of $0.08 per ton of ore milled, assuming a natural gas cost of about $0.40 per 1000 cubic feet or 1,000,000 Btu.

210,000 x $0.08 = $16,800 per Year

Water

Of about 551 gpm of process water estimated to be required, about 451 gpm should be reclaimable, leaving about 100 gpm of make-up water to be furnished. Well water at a cost of $0.10 per 1000 gallons has been assumed.

$$100 \text{ gpm} \times 1440 \times 350 \times \frac{\$0.10}{1000} = \$5040 \text{ per Year}$$

Summary of Utilities:

Electric Power	$144,858
Natural Gas	16,800
Water	5,040
Total	$166,698 per Year

Summary of Direct Costs

Item of Cost	Cost Per Year	Cost Per Ton of Ore 1/
Raw Material	(2)	(2)
Labor, Operating	$112,974	$0.54
Supervision	$ 18,000	$0.09
Maintenance	$130,000	$0.62
Plant Supplies	$326,520	$1.55
Royalties & Patents	(3)	(3)
Utilities	$166,698	$0.79
Total Direct Costs	$754,192	$3.59

1/ Based on 210,000 tons ore per year
2/ Not included in this estimate
3/ Not required for this process

Indirect Costs

Payroll Overhead

For all company expense incurred through pensions, paid vacations, hospitalization and life insurance, sick leave and disability pay, social security, unemployment taxes, housing subsidies, and any other fringe benefits, 35% has been used in this estimate.

Type of Labor	Cost per Year	No. of Men
Operating	$112,974	13
Supervision	18,000	1
Maintenance-Labor	71,400	8
Laboratory	20,400	2
Overhead	12,000	1
Total Payroll	$234,774	25

$234,774 x 0.35 = $82,171 per Year

Laboratory

Fire Assayer	$12,000
Sample Preparation Man	8,400
Chemicals & Supplies	3,000
Total Laboratory	$23,400

Plant Overhead

Accountant	$12,000
Stationery supplies, telephone, office machine service	1,200
Total Plant Overhead	$13,200

Summary of Indirect Costs

	Cost Per	
Item of Cost	Year	Ton of Ore
Payroll Overhead	$ 82,171	0.39
Laboratory	$ 23,400	0.11
Plant Overhead	$ 13,200	0.07
Total Indirect Costs	$118,771	0.57

APPENDIX A

Details of Preparation of Various Composites for Laboratory Tests

Table A-1 (1 of 2 pages)

Details of Preparation of Drill Hole Composite for Laboratory Tests, Composite A

(Drill Hole No. 1 and 2: HRI 3808 and 3846)

Sample No.	Cut	Footage Interval	Ag, oz/ton	Footage x Assay
HRI-3808				
13	1/2	3.5	3.82	13.37
14	1/2	1.5	3.15	4.72
15	1/2	2.0	6.67	13.34
16	1/2	2.0	16.04	32.08
17	1/2	2.5	3.39	8.47
18	1/2	2.5	6.67	16.67
19	1/2	2.0	4.21	8.42
20	1/2	5.5	2.60	14.30
24	1/2	1.0	14.64	14.64
25	1/2	4.0	2.54	10.16
26	1/2	2.0	4.12	8.24
27	1/2	2.0	4.28	8.56
30	1/2	2.0	0.25	0.50
34	1/2	2.0	11.86	23.72
35	1/2	2.5	0.48	1.20
36	1/2	1.0	3.74	3.74
40	1/2	1.0	38.44	38.44
41	1/2	5.0	6.10	30.50
42	1/2	5.0	6.98	34.90
43	1/2	1.0	12.68	12.68
47	1/2	1.5	3.85	5.77
48	1/2	4.0	36.72	146.88
49	1/2	1.5	2.28	3.42
50	1/2	2.5	4.36	10.90
51	1/2	2.5	2.86	7.15
54	1/2	2.5	2.88	7.20
55	1/2	1.0	115.75	115.75
56	1/2	2.5	2.88	7.20
62	1/2	2.0	4.64	9.28

Table A-1 (2 of 2 pages)

Sample No.	Cut	Footage Interval	Ag, oz/ton	Footage x Assay
HRI-3846				
2	1/2	1.0	15.90	15.90
3	1/2	2.0	3.89	7.78
4	1/2	1.8	36.82	66.28
11	1/2	5.0	3.60	18.00
12	1/2	3.0	6.24	18.72
13	1/2	3.5	3.32	11.62
27	1/2	1.5	4.85	7.28
29	1/2	1.0	8.83	8.83
30	1/2	1.0	3.94	3.94
32	1/2	3.5	3.93	10.54
44	1/2	1.0	4.15	4.15
45	1/2	1.5	6.10	9.15
46	1/2	2.5	6.64	16.60
48	1/2	1.5	4.33	6.50
49	1/2	1.0	2.39	2.39
50	1/2	1.5	3.47	3.47
65	1/2	2.5	3.21	8.02
66	1/2	2.5	6.84	17.10
67	1/2	1.0	3.32	3.32
71	1/2	1.0	2.39	2.39
72	1/2	1.0	9.85	9.85
73	1/2	1.0	4.01	4.01
82	1/2	1.0	19.75	19.75
		112.3		887.79

$$\frac{887.79}{112.3} = 7.91$$

Table A-2 (1 of 2 pages)

Details of Preparation of Drill Hole Composite for Laboratory Tests, Composite B
(Drill Hole No. 3: HRI 3869)

Sample No.	Cut	Footage Interval	Ag, oz/ton	Footage x Assay
HRI-3869				
58	1/2	1.0	0.39	0.39
59	1/2	1.0	0.88	0.88
60	1/2	1.0	0.53	0.53
61	1/2	1.0	0.21	0.21
62	1/2	1.0	0.36	0.36
63	1/2	3.0	0.14	0.42
64	1/2	3.5	1.47	5.14
65	1/2	1.0	0.72	0.72
66	1/2	3.5	0.43	1.50
67	1/2	1.0	3.30	3.30
68	1/2	3.5	17.05	59.68
69	1/2	1.0	3.50	3.50
70	1/2	2.5	2.51	6.28
71	1/2	1.0	1.21	1.21
72	1/2	1.5	2.55	3.83
73	1/16	0.28	41.32	11.57
74	1/16	0.13	73.01	9.49
75	1/16	0.19	89.26	16.90
76	1/16	0.063	484.72	29.08
77	1/16	0.063	234.63	14.78
78	1/16	0.063	47.81	3.01
79	1/2	1.0	20.41	20.41
80	1/2	2.0	2.76	5.52
81	1/2	2.0	8.74	17.48
82	1/2	1.0	5.19	5.19
83	1/2	1.5	1.78	2.67
84	1/2	1.5	3.48	5.22
85	1/2	2.0	2.54	5.08
86	1/2	2.5	19.39	48.48
87	1/2	2.0	20.43	40.86

Table A-2 (2 of 2 pages)

Sample No.	Cut	Footage Interval	Ag, oz/ton	Footage x Assay
HRI-3869				
88	1/2	1.0	10.43	10.43
89	1/2	5.0	10.15	50.75
90	1/2	4.0	13.15	52.60
91	1/2	5.5	6.32	34.76
92	1/2	1.5	2.26	3.39
93	1/2	2.0	4.06	8.12
94	1/2	1.0	1.83	1.83
95	1/2	1.0	1.71	1.71
96	1/2	3.0	2.05	6.15
97	1/2	1.5	0.93	1.40
98	1/2	1.0	1.05	1.05
99	1/2	2.0	1.99	3.98
100	1/2	1.0	0.83	0.83
101	1/2	1.0	1.04	1.04
102	1/2	3.5	1.04	3.64
103	1/2	2.0	0.60	1.20
		78.79		506.57

$$\frac{506.57}{78.79} = 6.43$$

Table A-3 (1 of 4 pages)

Details of Preparation of Drill Hole Composite for Laboratory Tests, Composite C
(Composite of Drill Hole No. 1, 2 and 3)
HRI-3808, 3846, 3869

Sample No.	Cut	Footage Interval	Ag, oz/ton	Footage x Assay
HRI-3808				
13	1/2	3.5	3.82	13.37
14	1/2	1.5	3.15	4.72
15	1/2	2.0	6.67	13.34
16	1/2	2.0	16.04	32.08
17	1/2	2.5	3.39	8.47
18	1/2	2.5	6.67	16.67
19	1/2	2.0	4.21	8.42
20	1/2	5.5	2.60	14.30
21	1/2	2.0	1.36	2.72
22	1/2	3.5	2.61	9.13
23	1/2	3.5	1.09	3.81
24	1/2	1.0	14.64	14.64
25	1/2	4.0	2.54	10.16
26	1/2	2.0	4.12	8.24
27	1/2	2.0	4.28	8.56
28	1/2	2.0	1.07	2.14
29	1/2	5.0	0.75	3.75
30	1/2	2.0	0.25	0.50
34	1/2	2.0	11.86	23.72
35	1/2	2.5	0.48	1.20
36	1/2	1.0	3.74	3.74
40	1/2	1.0	38.44	38.44
41	1/2	5.0	6.10	30.50
42	1/2	5.0	6.98	34.90
43	1/2	1.0	12.68	12.68
44	1/2	5.0	1.32	6.60
47	1/2	1.5	3.85	5.77
48	1/2	4.0	36.72	146.88
49	1/2	1.5	2.28	3.42
50	1/2	2.5	4.36	10.90

Table A-3

Sample No.	Cut	Footage Interval	Ag, oz/ton	Footage x Assay
51	1/2	2.5	2.86	7.15
52	1/2	2.5	1.89	4.73
54	1/2	2.5	2.88	7.20
55	1/2	1.0	115.75	115.75
56	1/2	2.5	2.88	7.20
57	1/2	2.5	1.69	4.23
62	1/2	2.0	4.64	9.28
HRI-3846				
2	1/2	1.0	15.90	15.90
3	1/2	2.0	3.89	7.78
4	1/2	1.8	36.82	66.28
11	1/2	5.0	3.60	18.00
12	1/2	3.0	6.24	18.72
13	1/2	3.5	3.32	11.62
27	1/2	1.5	4.85	7.28
29	1/2	1.0	8.83	8.83
30	1/2	1.0	3.94	3.94
32	1/2	3.5	3.93	3.93
33	1/2	5.0	1.01	5.50
34	1/2	1.0	3.44	3.44
44	1/2	1.0	4.15	4.15
45	1/2	1.5	6.10	9.15
46	1/2	2.5	6.64	16.60
48	1/2	1.5	4.33	6.50
49	1/2	1.0	2.39	2.39
50	1/2	1.5	3.47	3.47
65	1/2	2.5	3.21	8.02
66	1/2	2.5	6.84	17.10
67	1/2	1.0	3.32	3.32
71	1/2	1.0	2.39	2.39
72	1/2	1.0	9.85	9.85
73	1/2	1.0	4.01	4.01
81	1/2	4.5	0.59	2.66
82	1/2	1.0	19.75	19.75
		152.30		960.40

Table A-3 (3 of 4 pages)

Sample No.	Cut	Footage Interval	Ag, oz/ton	Footage x Assay
HRI-3869				
58	1/2	1.0	0.39	0.39
59	1/2	1.0	0.88	0.88
60	1/2	1.0	0.53	0.53
61	1/2	1.0	0.21	0.21
62	1/2	1.0	0.36	0.36
63	1/2	3.0	0.14	0.42
64	1/2	3.5	1.47	5.14
65	1/2	1.0	0.72	0.72
66	1/2	3.5	0.43	1.50
67	1/2	1.0	3.30	3.30
68	1/2	3.5	17.05	59.68
69	1/2	1.0	3.50	3.50
70	1/2	2.5	2.51	6.28
71	1/2	1.0	1.21	1.21
72	1/2	1.5	2.55	3.83
73	1/16	0.28	41.32	11.57
74	1/16	0.13	73.01	9.49
75	1/16	0.19	89.26	16.90
76	1/16	0.063	484.72	29.08
77	1/16	0.063	234.63	14.78
78	1/16	0.063	47.81	3.01
79	1/2	1.0	20.41	20.41
80	1/2	2.0	2.76	5.52
81	1/2	2.0	8.74	17.48
82	1/2	1.0	5.19	5.19
83	1/2	1.5	1.78	2.67
84	1/2	1.5	3.48	5.22
85	1/2	2.0	2.54	5.08
86	1/2	2.5	19.39	48.48
87	1/2	2.0	20.43	40.86
88	1/2	1.0	10.15	50.75
89	1/2	5.0	10.15	50.75
90	1/2	4.0	13.15	52.60
91	1/2	5.5	6.32	34.76
92	1/2	1.5	2.26	3.39

Table A-3 (4 of 4 pages)

Sample No.	Cut	Footage Interval	Ag, oz/ton	Footage x Assay
93	1/2	2.0	4.06	8.12
94	1/2	1.0	1.83	1.83
95	1/2	1.0	1.71	1.71
96	1/2	3.0	2.05	6.15
97	1/2	1.5	0.93	1.40
98	1/2	1.0	1.05	1.05
99	1/2	2.0	1.99	3.98
100	1/2	1.0	0.83	0.83
101	1/2	1.0	1.04	1.04
102	1/2	3.5	1.04	3.64
103	1/2	2.0	0.60	1.20
		231.09		1,467.0

$$\frac{1,467.0}{231.09} = 6.35$$

APPENDIX B

Details of Laboratory Flotation Tests

Grade-Recovery Curve of Gold and Silver
from Flotation of Composite C

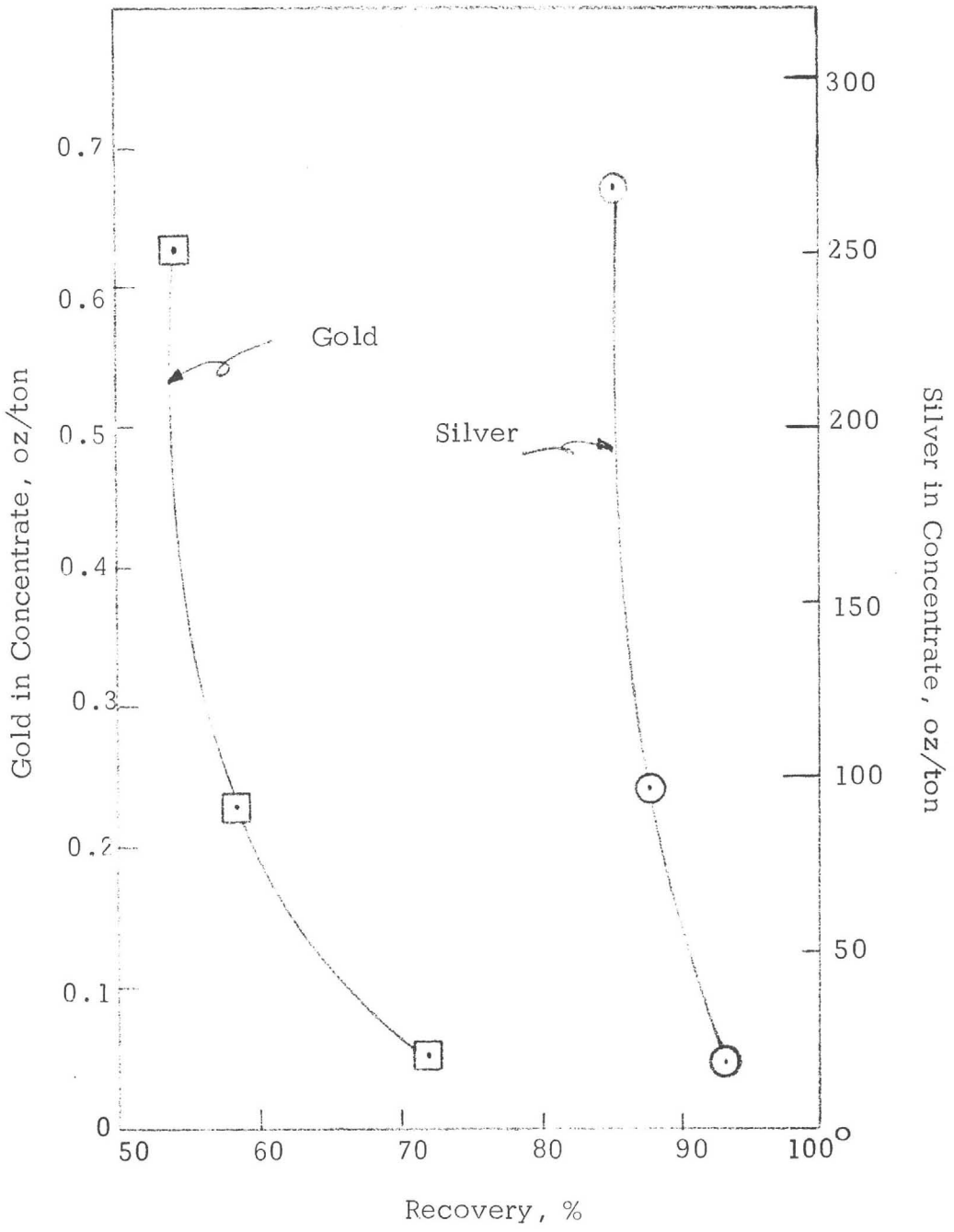

Figure B-1

hri

Table B-1

FLOTATION TEST NO. F-1 PROJ. NO. 979

ORE Composite A, (HRI-3846, 3808) 50 g, -6 M DATE 7-16-71

TEST CONDITIONS

OPERATION	TEST CONDITIONS				REAGENTS-lbs/TON						
	TIME MIN	SOLIDS %	PH	TEMP °C	Minerec B	Barrett No. 4	Pine Oil	CaO			
Grind	30	50	7.2	30	0.05	0.05	0.03	0.40			
Rougher flotation	5	33	7.2	30							
Condition	2	33	7.2	30	0.008	0.008	0.01				
Rougher flotation	2	33	7.2	30							

COMMENTS: Minus 100-mesh grind

OBJECTIVE: Observing susceptibility of silver and gold flotation using same reagents as RF-2 reported by METCON.

B-2

TEST RESULTS

TEST PRODUCTS	WEIGHT %	Assay, %						DISTRIBUTION - PERCENT					
		Au oz/ton	Ag oz/ton							Au	Ag		
Heads													
Rougher concentrate	15.2	0.16	42.5							41.4	82.7		
Rougher	84.8	0.04	1.6							58.6	17.3		
	100.0	0.058	7.82							100.0	100.0		

Table B-2

FLOTATION TEST NO. F-2 PROJ. NO. 979

ORE Composite A, (HRI-3846, 3808) 500 g, -6 M DATE 7-16-71

TEST CONDITIONS

OPERATION	TEST CONDITIONS				REAGENTS-lbs/TON						
	TIME MIN	SOLIDS %	PH	TEMP °C	Minerec B	Barrett No. 4	Pine Oil	CaO	3477	208	Aerofloat 31
Grind	30	50	7.1	30	0.05	0.05	0.03	0.4			
First rougher flotation	5	33	7.1	30							
Condition	2	33	7.1	30			0.03		0.05	0.05	0.05
Second rougher flotation	5	30	7.1	30							
Condition	2	30	7.1	30			0.03		0.05	0.05	0.05
Third rougher flotation	5	30	7.1	30							
Condition	2	27	7.1	30			0.03		0.05	0.05	0.05
Fourth rougher flotation	5	27	7.1	30							

COMMENTS: Minus 100-mesh grind

OBJECTIVE: Stage addition of additional three reagents (Viz. 3477, 208 and AF 31) to observe if any improvement of silver recovery as compared to Test RF-2 of METCON.

TEST RESULTS

TEST PRODUCTS	WEIGHT %	Assay, %						DISTRIBUTION - PERCENT					
		Au oz/ton	Ag oz/ton							Au	Ag		
Head		0.03	7.76										
First rougher concentrate	6.2	0.28	90.5							32.8	76.7		
Second rougher concentrate	8.4	0.16	7.6							25.3	8.7		
Third rougher concentrate	7.2	0.08	5.1							10.9	5.0		
Fourth rougher concentrate	3.7	0.04	3.0							2.9	1.6		
Rougher tail	74.5	0.02	0.79							28.1	8.0		
	100.0	0.053	7.32							100.0	100.0		
Calculated head	100.0	0.05	7.32										
Calculated rougher conc	25.5	0.15	26.38							71.9	92.0		
Calc. comb (1st, 2nd) rougher	14.6	0.21	42.80							58.1	85.4		
Calc comb (1st, 2nd, 3rd) rougher	21.8	0.17	30.3							69.0	90.4		

hri

Table B-3

FLOTATION TEST NO. F-3 PROJ. NO. 979

ORE Composite A (HRI-3846,3808) 500 g, -6 M DATE 7-16-71

TEST CONDITIONS

OPERATION	TEST CONDITIONS				REAGENTS-lbs/TON						
	TIME MIN	SOLIDS %	PH	TEMP °C	Minerec B	Barrett No. 4	Pine Oil	CaO	3477	208	Aerofloat 31
Grind	30	50	7.1	30	0.05	0.05	0.03	0.4	0.15	0.15	0.15
Condition	2	33	7.1	30							
Rougher flotation	20	≈30	7.1	30							
Condition	2	≈15	7.1	30			0.03		0.05	0.05	0.05
First cleaner flotation	7	≈15	7.1	30							

COMMENTS: Same as Test F-2 except all reagents added at once to ball mill and floated for 20 minutes (rougher flotation) The rougher flotation cleaned once with reagents as shown above. Minus 100-mesh grind.

OBJECTIVE: Addition of all reagents at one stage to ball mill to observe if any improvement of silver recovery as compared to stage addition in Test F-2.

TEST RESULTS

TEST PRODUCTS	WEIGHT %	Assay, %		DISTRIBUTION - PERCENT	
		Au oz/ton	Ag oz/ton	Au	Ag
Head		0.03	7.76		
First cleaner concentrate	3.0	0.64	230.7	45.6	87.2
First cleaner tail	17.5	0.04	2.8	16.6	6.2
Rougher tail	79.5	0.02	0.66	37.8	6.6
	100.0	0.042	7.94	100.0	100.0
Calculated head	100.0	0.042	7.94		
Calculated rougher conc	21.5	0.122	34.47	62.2	93.4

Table B-4

FLOTATION TEST NO. F-4 PROJ. NO. 979

ORE Composite A, (HRI-3846, 3808) 1500 g, -6 M DATE 7-22-71

TEST CONDITIONS

OPERATION	TEST CONDITIONS				REAGENTS-lbs/TON						
	TIME MIN	SOLIDS %	PH	TEMP °C	Minerec B	Barrett No. 4	Pine Oil	CaO	3477	208	Aerofloat 31
Grind	30	50	7.4	70	0.05	0.05	0.03	0.4	0.15	0.15	0.15
Rougher flotation	20	30	7.4	70							
Condition	2	20	7.3	70	0.05	0.05			0.05	0.05	0.05
First cleaner flotation	10	20	7.3	70							
Condition	2	15	7.3	70		0.05			0.05	0.05	0.05
Second cleaner flotation	8	15	7.3	70							
Condition	2	15	7.3	70							
Third cleaner flotation	5	15									0.05

COMMENTS: Minus 100-mesh grind.

OBJECTIVE: To observe the effect of successive cleaning on the grade and recovery of silver and gold concentrate.

TEST RESULTS

TEST PRODUCTS	WEIGHT %	Assay, %						DISTRIBUTION - PERCENT					
		Au oz/ton	Ag oz/ton							Au	Ag		
Heads			7.78										
Third cleaner concentrate	0.74	2.72	882.09							45.4	81.4		
Third cleaner tail	0.56	0.40	57.40							4.5	4.0		
Second cleaner tail	5.31	0.06	6.41							6.8	4.2		
First cleaner tail	19.47	0.03	1.60							11.4	3.9		
Rougher tail	73.92	0.02	0.71							31.9	6.5		
	100.00	0.044	8.02							100.0	100.0		
Calculated heads													
Calc second cleaner conc	1.30	1.69	526.9							50.0	85.4		
Calc first cleaner conc	6.61	0.38	108.8							56.7	89.6		
Calc rougher concentrate	26.08	0.12	28.8							68.1	93.5		

Table B-5

FLOTATION TEST NO. F-5
ORE Composite B (Hole No. 3), minus 6-mesh

PROJ. NO. 979
DATE 8-3-71

TEST CONDITIONS

OPERATION	TEST CONDITIONS				REAGENTS-lbs/TON						
	TIME MIN	SOLIDS %	PH	TEMP °F	Minerec B	Barrett No. 4	Pine Oil	CaO	3477	208	Aerofloat 31
Grind	30	50	7.2	70	0.05	0.05	0.03	0.8	0.15	0.15	0.15
Rougher flotation	20	30	7.2	70							
Condition	2	20	7.3	70	0.05	0.05			0.05	0.05	0.05
First cleaner flotation	10	20	7.3	70							
Condition	2	15	7.2	70		0.05			0.05	0.05	0.05
Second cleaner flotation	8	15	7.1	70							
Condition	2	10	7.1	70							0.05
Third cleaner flotation	5	10	7.1	70							

COMMENTS: Flotation on the composite of Hole 3 alone. For this ore sample, note the variation in distribution of gold in products as compared to Test F-6. Grind minus 100-mesh.

OBJECTIVE: To observe the effect of successive cleaning on the grade and recovery of silver and gold to concentrates.

TEST RESULTS

TEST PRODUCTS	WEIGHT %	Assay, %						DISTRIBUTION – PERCENT					
		Au oz/ton	Ag oz/ton							Au	Ag		
Heads		0.02	6.42										
Third cleaner concentrate	1.08	0.72	485.44							36.4	80.6		
Third cleaner tail	0.47	0.08	19.36							18.2	1.4		
Second cleaner tail	4.72	0.03	3.81							4.5	2.8		
First cleaner tail	22.31	0.01	1.15							9.1	4.0		
Rougher tail	71.42	0.01	1.02							31.8	11.2		
Calculated heads	100.00	0.022	6.50							100.0	100.0		
Calc second cleaner conc	1.55	0.77	343.9							54.6	82.0		
Calc first cleaner conc	6.27	0.21	87.9							59.1	84.8		
Calc rougher concentrate	28.58	0.052	20.2							68.2	88.8		

hri

Table B-6

FLOTATION TEST NO. F-6 PROJ. NO. 979

ORE Composite C (Hole 1, 2, and 3) -6 mesh DATE 8-5-71

TEST CONDITIONS

OPERATION	TEST CONDITIONS				REAGENTS-lbs/TON						
	TIME MIN	SOLIDS %	PH	TEMP °F	Minerec B	Barrett No. 4	Pine Oil	CaO	3477	208	Aerofloat 31
Grind	30	50	7.3	70	0.05	0.05	0.03	0.6	0.15	0.15	0.15
Rougher flotation	20	30	7.2	70							
Condition	2	20	7.2	70	0.05	0.05			0.05	0.05	0.05
First cleaner flotation	10	20	7.2	70							
Condition	2	15	7.2	70		0.05			0.05	0.05	0.05
Second cleaner flotation	8	15	7.2	70							
Condition	2	10	7.2	70							0.05
Third cleaner flotation	5	10	7.2	70							

COMMENTS: Flotation on the overall composite of Hole 1, 2, and 3. Grind minus 100-mesh.

OBJECTIVE: To observe the effect of successive cleaning on the grade and recovery of silver and gold to concentrates.

TEST RESULTS

TEST PRODUCTS	WEIGHT %	Assay, %						DISTRIBUTION – PERCENT					
		Au oz/ton	Ag oz/ton							Au	Ag		
Heads		0.04	6.36										
Third cleaner concentrate	1.20	0.92	441.80							50.0	82.0		
Third cleaner tail	0.85	0.16	24.32							4.1	3.3		
Second cleaner tail	3.93	0.03	4.28							4.1	2.6		
First cleaner tail	26.30	0.01	1.32							12.5	5.4		
Rougher tail	67.72	0.01	0.64							29.3	6.7		
Calculated head	100.00	0.024	6.46							100.0	100.0		
Calc second cleaner conc	2.05	0.63	268.8							54.1	85.3		
Calc first cleaner conc	5.98	0.23	96.7							58.2	87.9		
Calc rougher concentrate	32.28	0.053	19.0							71.7	93.3		

APPENDIX C

Details of Laboratory Cyanide Leach Tests

Table C-1

Summary of Results of Agitation Cyanide Leach
(Under Intense Aereation Conditions)

Ore	Mesh Size	Leach Time Hours	Description	% Extraction		Leach Residue Assay oz/ton		Cyanide Consumption lb/ton	CaO lb/ton
				Ag	Au	Ag	Au		
Composite A	48	24	Cyanide added after grind	83.4					12.0
	48	48	Cyanide added after grind	88.3					12.0
	48	72	Cyanide added after grind	89.9	50.0	0.83	0.01	2.4	12.0
	48	24	Ground with cyanide	76.3					12.0
	48	48	Ground with cyanide	75.5					12.0
	48	72	Ground with cyanide	92.2	50.0	0.63	0.01	3.8	12.0
	100	24	Cyanide added after grind	84.3					12.0
	100	48	Cyanide added after grind	94.0					12.0
	100	72	Cyanide added after grind	95.0	50.0	0.41	0.01	3.2	12.0
Composite B	48	48	Cyanide added after grind	89.6	50.0	0.71	0.01	3.6	12.0
Composite C	48	72	Cyanide added after grind	96.0	75.0	0.26	<0.005	3.6	12.0
	100	48	Cyanide added after grind	93.0	75.0	0.60	<0.005	3.8	12.0
	100	72	Cyanide added after grind	95.7	75.0	0.27	<0.005	3.8	12.0

Table C-2

Comparison of Cyanidation Procedures on Silver Extraction
(Composite A)

Grind	Pre-leach Treatment	Ag Extraction, %		
		24 Hours	48 Hours	72 Hours
48 Mesh	Solution decanted after grinding	73.8	76.0	89.7
	Grinding solution proceeded to leach	83.4	88.3	89.9
	Ground in cyanide solution (pebble mill)	76.3	75.5	92.2
100 Mesh	Solution decanted after grinding	78.4	76.0	94.7
	Grinding solution proceeded to leach	84.3	94.0	94.7
	Ground in cyanide solution (pebble mill)	76.3	76.8	95.0

NOTE: 1. Grinding accomplished at 50% solids

2. Cyanide leaches conducted at 25% solids

LABORATORY PROCEDURES FOR CYANIDE LEACH

Materials for all cyanide leaches were ground for requisite amount of time with 12.0 pounds of CaO which gave an initial pH of 11.0 to all pulps. The leach was carried out at 25% solids in 0.1% NaCN solution in a beaker under intense aeration condition while the pulp was mechanically agitated with stirrer. The constant cyanide concentration was maintained all throughout the test by assaying CN concentration of solution and adding requisite amount of cyanide when necessary.

The cyanide consumption and total alkalinity was checked every twelve hours and reagent was added to maintain initital concentration.

At the end of each leach, the pulp was filtered and washed. The wash consisted of three bed thicknesses of pH 11.0, 0.1%. NaCN solution and three separate pulp bed thicknesses of demineralized water.

APPENDIX D

Details of Salt Roast-Acid Brine Leach of Composite A Ore

SALT ROAST-ACID BRINE LEACH OF COMPOSITE A ORE

PROCEDURE

Two salt roasts were carried out in a one hundred gram rotary glass kiln at both 400°C and 450°C. The feed to the roasts was minus 48-mesh composite A ore with a 3.0% NaCl reagent blended into the ore. Approximately 200 cc per minute of dry compressed air was passed through the kiln during the roasts. Roasting time was thirty minutes. Loss in weight was determined by weighing the loaded kiln both before the roast and after cooling down. The weight loss was 2.13% at 400°C and 1.16% at 450°C.

Both roast products were then leached at 5% solids in a saturated NaCl solution. The pH was maintained at approximately 1.5 with sulfuric acid and the temperature of the leach was maintained at 50°C. Total leach time was four hours. Emf was observed and pH adjusted approximately at 20 minute intervals. Acid consumption was about 52 pounds per ton for both leaches. Final emf readings were around minus 350 millivolts.

At the end of leaching, each pulp was filtered and washed with a 1.5 pH saturated NaCl solution at 50°C. The wash consisted of five individual washes of approximately one bed thickness of filtered pulp.

APPENDIX E

Material Balances for Cyanidation and Flotation Flowsheet at 600 Tons Per Day of Ore Feed

Table E-1

Materials Balance for 600 T.P.D. Gold-Silver Cyanidation Plant

Stream No.	Description	Tons per Hour			Specific Gravity		Volumetric Displacement in Gallons per Minute			Pulp Conditions		Remarks
		Solids	Liquid	Total	Solids	Liquid	Solids	Liquid	Total	Undissolved % Solids	g/l	
1	Feed ore	105.00	-	105.00	2.7	-	-	-	-	100.0	-	Ore assumed dry; based on day shift only in crushing plant
2	Screen feed	157.50	-	157.50	2.7	-	-	-	-	100.0	-	Assume 50% circulating load
3	Circulating load	52.50	-	52.50	2.7	-	-	-	-	100.0	-	Assume 50% circulating load
4	New mill feed	25.00	-	25.00	2.7	-	-	-	-	100.0	-	Based on 168 hours per week
5	Ball mill feed pulp	87.50	87.50	175.00	2.7	1.00	129.45	349.50	478.95	50.0	1,460	
6	Circulating load	62.50	62.50	125.00	2.7	1.00	92.46	249.64	342.10	50.0	1,460	Based on 250% circulating load
7	Ball mill dilution water	-	25.00	25.00	-	1.00	-	99.86	99.86	0.0	1,000	Based on 50% solids
8	Cyclone dilution water	-	50.50	50.50	-	1.00	-	201.71	201.71	0.0	1,000	
9	Ball mill discharge pulp	87.50	87.50	175.00	2.7	1.00	129.45	349.50	478.95	50.0	1,460	
10	Cyclone feed	87.50	138.00	225.50	2.7	1.00	129.45	551.21	680.66	38.8	1,323	
11	Cyclone overflow	25.00	75.50	100.50	2.7	1.00	36.98	301.57	338.55	24.9	1,186	
12	Thickener No. 1 feed	25.00	138.00	163.00	2.7	1.00	36.98	551.21	588.19	15.33	1,107	Leached pulp plus advance wash solution
13	Thickener No. 2 overflow	-	62.50	62.50	-	1.00	-	249.64	249.64	0.0	1,000	
14	Thickener No. 1 underflow	25.00	25.00	50.00	2.7	1.00	36.98	99.86	136.84	50.0	1,460	Assume 50% solids in all thickener underflows.
15	Thickener No. 3 overflow	-	62.50	62.50	-	1.00	-	249.64	249.64	0.0	1,000	
16	Thickener No. 2 feed	25.00	87.50	112.50	2.7	1.00	36.98	349.50	386.48	22.2	1,163	
17	Thickener No. 2 underflow	25.00	25.00	50.00	2.7	1.00	36.98	99.86	136.84	50.0	1,460	
18	Thickener No. 3 feed	25.00	87.50	112.50	2.7	1.00	36.98	349.50	386.48	22.2	1,163	
19	Thickener No. 4 overflow	-	62.50	62.50	-	1.00	-	249.64	249.64	0.0	1,000	
20	Thickener No. 3 underflow	25.00	25.00	50.00	2.7	1.00	36.98	99.86	136.84	50.0	1,460	
21	Thickener No. 4 feed	25.00	87.50	112.50	2.7	1.00	36.98	349.50	386.48	22.2	1,163	
22	Thickener No. 4 underflow	25.00	25.00	50.00	2.7	1.00	36.98	99.86	136.84	50.0	1,460	
23	Wash water	-	62.50	62.50	-	1.00	-	249.64	249.64	0.0	1,000	
24	Thickener No. 5 underflow	25.00	25.00	50.00	2.7	1.00	36.98	99.86	136.84	50.0	1,460	
25	Thickener No. 5 overflow	-	62.50	62.50	-	1.00	-	249.64	249.64	0.0	1,000	
26	Pregnant liquor (Thickener No. 1 overflow)	-	113.00	113.00	-	1.00	-	451.35	451.35	0.0	1,000	
27	Zinc dust	6.25 lb	-	6.25 lb	-	-	-	-	-	100.0	-	Zn dust addition at 0.6 oz/oz Ag precipitated
28	Zinc dust precipitate	170.5 oz	25.6 oz	196.1 oz	-	1.00	-	-	-	90.0		Assume 90% Au and Ag, 10% total Zn (dry basis), 15% moisture
29	Slag	3.34 lb	-	3.34 lb	-	-	-	-	-	100.0		Flux per 100 lb precipitate = 10 lb borax, 5 lb $NaHCO_3$, 5 lb silica sand assume all zinc goes to slag
30	Au-Ag bullion	153.5 oz	-	153.5 oz	-	-	-	-	-	100.0		Assume only Au and Ag in bullion

Table E-2

Material Balance for 600 T.P.D. Gold-Silver Flotation Plant

Stream No.	Description	Tons Per Hour			Specific Gravity		Volumetric Displacement in Gallons Per Minute			Pulp Conditions		Remarks
		Solids	Liquid	Total	Solids	Liquid	Solids	Liquid	Total	Undissolved % Solids	g/l	
1	Feed ore	105.00	-	105.00	2.7	-	-	-	-	100.0	-	Ore assumed dry, based on day shift only in crushing plant
2	Screen feed	157.50	-	157.50	2.7	-	-	-	-	100.0	-	Assume 50% circulating load
3	Circulating load	52.50	-	52.50	2.7	-	-	-	-	100.0	-	Assume 50% circulating load
4	New mill feed	25.00	-	25.00	2.7	-	-	-	-	100.0	-	Based on 168 hours per week
5	Ball mill feed pulp	87.50	87.50	175.00	2.7	1.00	129.45	349.50	478.95	50.0	1,460	
6	Circulating load	62.50	62.50	125.00	2.7	1.00	92.46	249.64	342.10	50.0	1,460	Based on 250% circulating load
7	Ball mill dilution water	-	25.00	25.00	-	1.00	-	99.86	99.86	0.0	1,000	Based on 50% solids
8	Cyclone dilution water	-	50.50	50.50	-	1.00	-	201.71	201.71	0.0	1,000	
9	Ball mill discharge pulp	87.50	87.50	175.00	2.7	1.00	129.45	349.50	478.95	50.0	1,460	Actually the specific gravity of the solid products will vary somewhat, but because of limited time available, the 2.7 was used throughout
10	Cyclone feed	87.50	138.00	225.50	2.7	1.00	129.45	551.21	680.66	38.8	1,323	
11	Cyclone overflow	25.00	75.50	100.50	2.7	1.00	36.98	301.57	338.55	24.9	1,186	
12	First cleaner tails thickener underflow	2.33	2.33	4.66	2.7	1.00	3.44	9.31	12.75	50.0	1,460	
13	Rougher flotation feed	27.33	77.83	105.16	2.7	1.00	40.43	310.88	351.31	26.0	1,196	
14	Rougher tailing	24.55	72.67	97.22	2.7	1.00	36.32	290.27	326.59	25.3	1,189	
15	Rougher concentrate	2.78	5.16	7.94	2.7	1.00	4.11	20.61	24.72	35.0	1,283	
16	Second cleaner tailing	0.13	2.41	2.54	2.7	1.00	0.19	9.63	9.82	5.1	1,033	
17	Feed to first cleaner pump	2.91	7.57	10.48	2.7	1.00	4.30	30.24	34.54	27.8	1,212	
18	First cleaner dilution water	-	8.92	8.92	2.7	1.00	-	35.63	35.63	0.0	1,000	
19	Feed to first cleaner flotation	2.91	16.49	19.40	2.7	1.00	4.30	65.87	70.17	15.0	1,104	
20	First cleaner tailing	2.33	15.14	17.47	2.7	1.00	3.44	60.48	63.92	13.3	1,092	
21	First cleaner concentrate	0.58	1.35	1.93	2.7	1.00	0.86	5.39	6.25	30.0	1,234	
22	Third cleaner tailing	0.05	1.78	1.83	2.7	1.00	0.07	7.11	7.18	2.7	1,018	
23	Second cleaner dilution water	-	0.44	0.44	-	1.00	-	1.76	1.76	0.0	1,000	
24	Second cleaner feed pulp	0.63	3.57	4.20	2.7	1.00	0.93	14.26	15.19	15.0	1,104	
25	Second cleaner concentrate	0.50	1.16	1.66	2.7	1.00	0.74	4.63	5.37	30.0	1,234	
26	Third cleaner dilution water	-	1.67	1.67	-	1.00	-	6.67	6.67	0.0	1,000	
27	Third cleaner feed pulp	0.50	2.83	3.33	2.7	1.00	0.74	11.30	12.04	15.0	1,104	
28	Third cleaner concentrate	0.45	1.05	1.50	2.7	1.00	0.67	4.19	4.86	30.0	1,234	
29	Concentrate thickener overflow	-	0.60	0.60	-	1.00	-	2.39	2.39	0.0	1,000	
30	Concentrate thickener underflow	0.45	0.45	0.90	2.7	1.00	0.67	1.80	2.47	50.0	1,460	
31	Filtered concentrate	0.45	0.08	0.53	2.7	1.00	0.67	0.32	0.99	85.0	2,152	
32	Filtrate	-	0.37	0.37	-	1.00	-	1.48	1.48	0.0	1,000	
33	First cleaner tails thickener overflow	-	12.81	12.81	-	1.00	-	51.17	51.17	0.0	1,000	