CONTACT INFORMATION
Mining Records Curator
Arizona Geological Survey
416 W. Congress St., Suite 100
Tucson, Arizona 85701
520-770-3500
http://www.azgs.az.gov
inquiries@azgs.az.gov

The following file is part of the

Richard Mieritz Mining Collection

ACCESS STATEMENT

These digitized collections are accessible for purposes of education and research. We have indicated what we know about copyright and rights of privacy, publicity, or trademark. Due to the nature of archival collections, we are not always able to identify this information. We are eager to hear from any rights owners, so that we may obtain accurate information. Upon request, we will remove material from public view while we address a rights issue.

CONSTRAINTS STATEMENT

The Arizona Geological Survey does not claim to control all rights for all materials in its collection. These rights include, but are not limited to: copyright, privacy rights, and cultural protection rights. The User hereby assumes all responsibility for obtaining any rights to use the material in excess of "fair use."

The Survey makes no intellectual property claims to the products created by individual authors in the manuscript collections, except when the author deeded those rights to the Survey or when those authors were employed by the State of Arizona and created intellectual products as a function of their official duties. The Survey does maintain property rights to the physical and digital representations of the works.

QUALITY STATEMENT

The Arizona Geological Survey is not responsible for the accuracy of the records, information, or opinions that may be contained in the files. The Survey collects, catalogs, and archives data on mineral properties regardless of its views of the veracity or accuracy of those data.

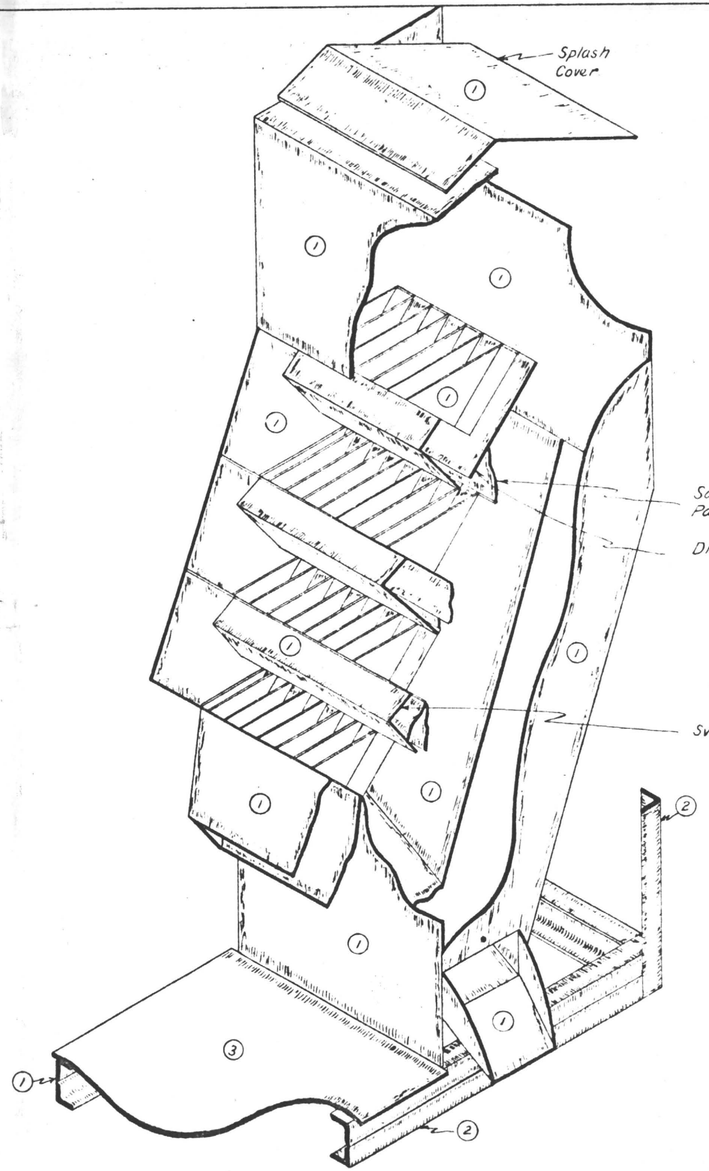

NOTE

Material used in construction of splitter.

1. 16 gauge black sheet iron for splitter housing, tiers, baffles, discharge lips, sample and reject discharges.
2. $1\frac{1}{2}$" equal leg x $\frac{3}{16}$" angle irons for splitter frame and reinforcements as shown.
3. $\frac{1}{8}$" Diamond floor plate.

Welded construction used throughout except for joining of sample and reject dividers of tiers which were solder sweated.

Hinges used for splash cover and baffles are $1\frac{1}{2}$" butts welded in place.

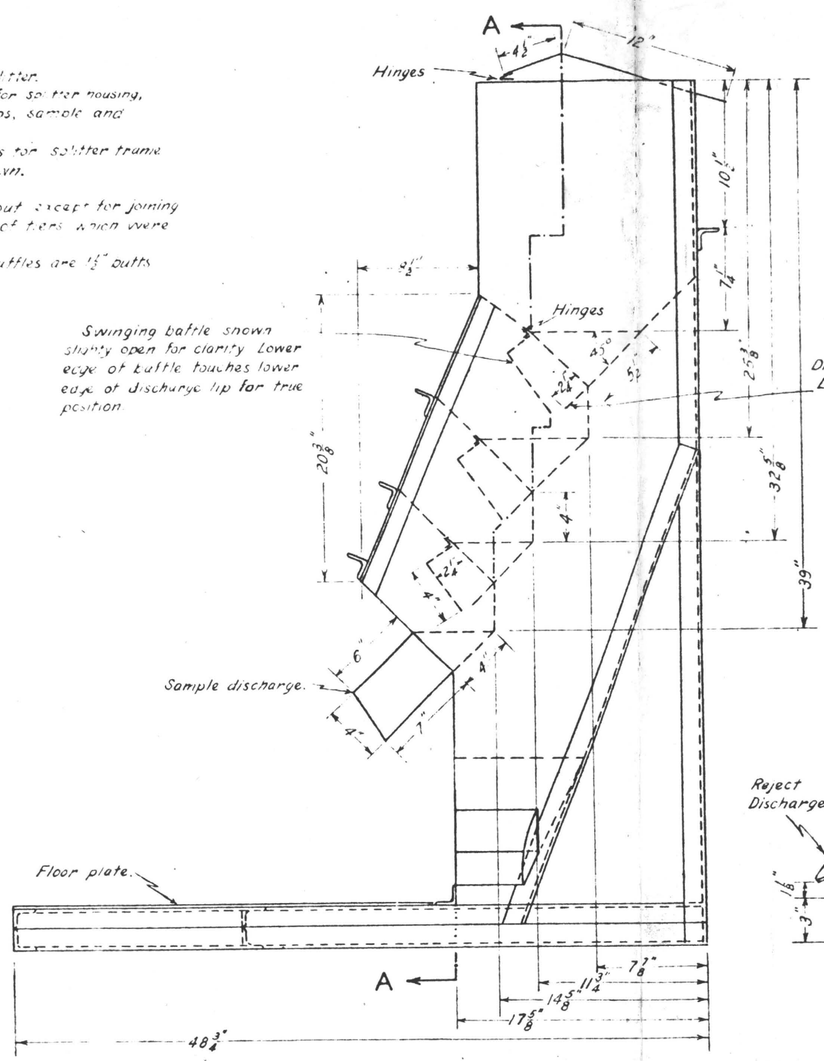

SIDE ELEVATION

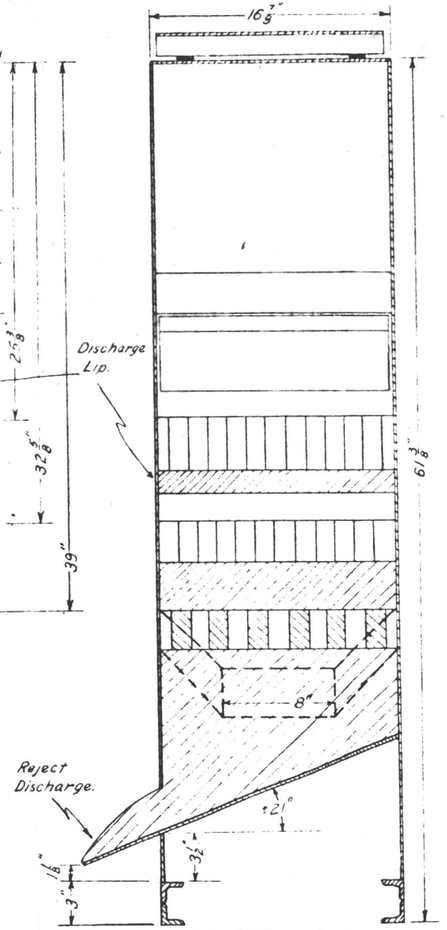

SECTION A-A

DESIGN OF

CHURN DRILL SLUDGE SPLITTER

American Smelting and Refining Company

Scale 1 ½" = 1' April, 1950

DESIGNED BY J. H. COURTRIGHT AND R. E. MIERITZ

DRAWN BY R. E. MIERITZ

File No. S-214-2A

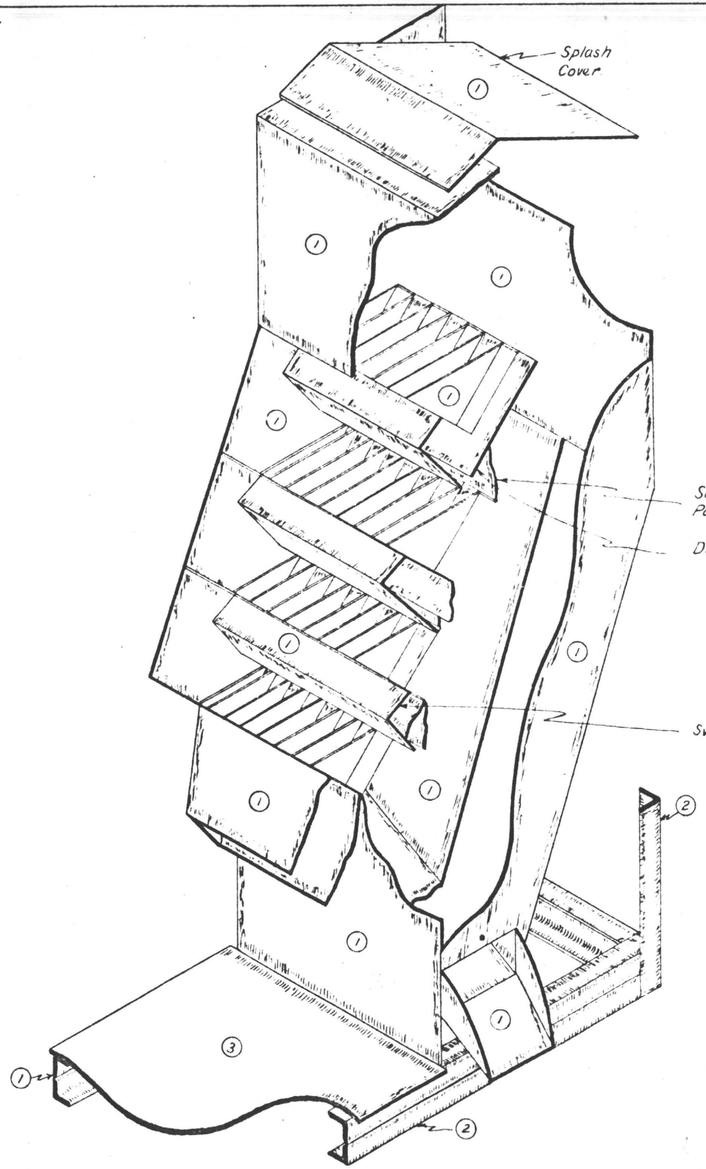

NOTE

Material used in construction of splitter.

1. 16 gauge black sheet iron for splitter housing, tiers, baffles, discharge lips, sample and reject discharges.
2. $1\frac{1}{2}$" equal leg x $\frac{3}{16}$" angle irons for splitter frame and reinforcements as shown.
3. $\frac{1}{8}$" Diamond floor plate.

Welded construction used throughout except for joining of sample and reject dividers of tiers which were solder sweated.

Hinges used for splash cover and baffles are $1\frac{1}{2}$" butts welded in place

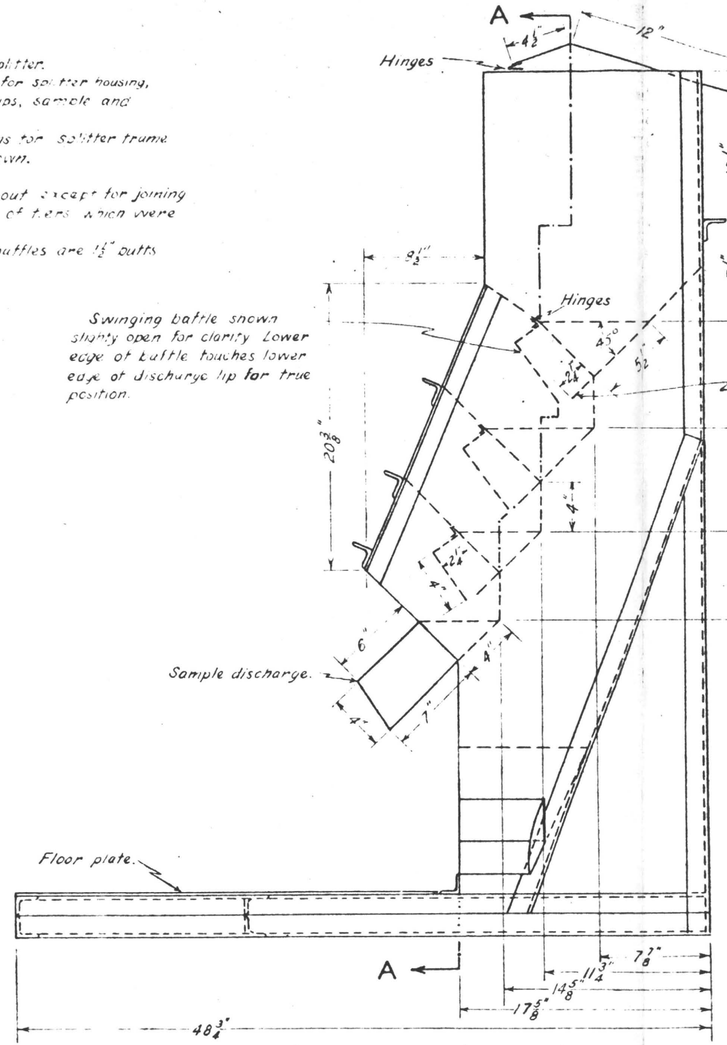

SIDE ELEVATION

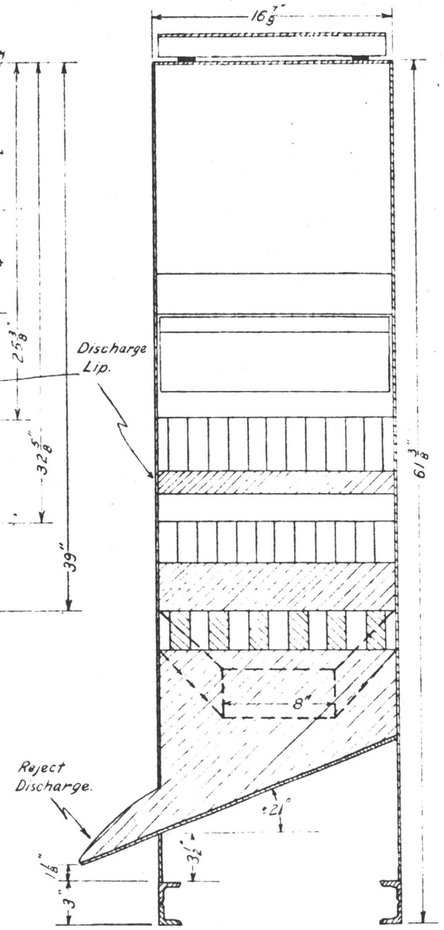

SECTION A-A

DESIGN OF

CHURN DRILL SLUDGE SPLITTER

American Smelting and Refining Company

Scale $1\frac{1}{2}$" = 1' April, 1950

DESIGNED BY J. H. COURTRIGHT AND R. E. MIERITZ
DRAWN BY R. E. MIERITZ

File No. S-214-2A

COPY

American Smelting and Refining Company
Tucson, Arizona

May 5, 1950

A SUPPLEMENT TO MR. J. H. COURTRIGHT'S
CHURN DRILLING AND SAMPLING REPORT
OF FEBRUARY 3, 1949, SILVERBELL, ARIZONA

RESULTS OF TESTS CONDUCTED ON RE-DESIGNED WET SLUDGE SPLITTER

By
R.E.Mieritz

INTRODUCTION:

Reference is to last sentence in paragraph two, page 6, and to the "addendum" on page 10 of the above mentioned report, wherein it was stated that "A new splitter under construction is designed to provide a more accurate split, and that separate description of the new splitter will be provided for the files".

This supplement contains a description of the new design and a discussion of results obtained from its use. The new design showed considerable improvement over the old, producing a sample that was 97% accurate in respect to weight.

This paper should be attached to the above mentioned report.

ORIGINAL WET SPLITTER:

While drilling the Oxide Copper deposit, a typical Jones-riffle 4-tier type splitter (purchased from Magma Copper, Tiger, Arizona) was used to obtain the desired churn drill sample (approximately 12 lbs. dry weight) for laboratory requirements. This equipment was patterned after a splitter device which is adequately described in Peale's Mining Engineer's Handbook, Third Edition, Volume 1, Section 10 - "Prospecting, Development and Exploitation of Mineral Deposits," pages 44 to 47.

Dimensions of sample and reject slots for the four tiers of the original splitter are tabulated from uppermost to lowest unit as follows:

1 - 12 openings @ 1-3/8" x 5-1/2"

2 - 12 openings @ 1-3/8" x 4-1/4"

3 - 18 openings @ 15/16" x 3"

4 - 18 openings @ 15/16" x 3"

Other structural features are similar to those described in the above reference.

INACCURACY OF ORIGINAL SPLITTER:

Inaccuracy of the splitter in respect to weight is apparent in the tabulation on page 6 of the aforementioned report. The average ratio, in percent, of the actual weight of split over the calculated weight of split (Col. 7 over Col. 6) for the fifteen tests is 131.5%, or an indicated oversize sample of 31.5%. Individual ratios varied from a low of 100.9% to a maximum of 192.6%, with a majority of the tests around 127%.

Sludge discharged from a tier sample slot tends to slide down the front plate which is inclined at 51°. Such construction allows but a 6° to 8° angle of reflection for the material as it comes into contact with the succeeding reject slots, and the small angle of reflection creates a "surging" action which tends to cause a portion of the reject sludge to "boil" over into the sample slots of the same tier. This condition is largely responsible for the existing inaccuracy and has been almost entirely eliminated in the new design.

Tabulation on page 6 of early report indicates a homogeneous mixture prevails inasmuch as average variation in copper content of split and reject was 0.06%, and the combined average difference was only 0.02% Cu. The wet split as received was, therefore, accepted as a representative portion of the entire sample in respect to copper content.

PRESENT WET SPLITTER:

Splitter currently used at the drill rig is a Jones-riffle type modified to some extent. Four changes were made to help improve efficiency of splitter, and are tabulated as follows:

(1) Same width sample and reject slots (1-3/8") for all four tiers.

(2) A 64° overall slope for the units.

(3) Addition of a discharge lip to provide a "fall" of material to succeeding tier.

(4) Addition of a movable baffle between units.

The same width sample and reject slot openings were maintained in all tiers for easy construction and to accomplish a simple staggering of each suffessive tier, such that material passing through a tier sample slot would be equally split by sample and reject slots of succeeding tier.

A steeper overall slope was accomplished by moving lower three tiers horizontally toward rear of splitter; that is, movement of the tiers was such that the back vertex of the triangular shape is immediately below the lower apex of the preceding tier. (See attached print - Design of Churn Drill Sample Splitter).

A small 2-1/4"-wide lip, across full width of tier, was added as a continuation of the sample slots to direct discharged sample material toward center of succeeding tier, permit material to "fall" against reject slots at a greater angle of incidence, and reduce "surging" or "boiling" to a minimum.

A swinging baffle was attached by two hinges to front under side of tiers on one splitter after a series of tests had been taken on the splitter

incorporating only the first three improvements. This improvement acts as a restriction to reduce "surging" of material, and as a wier to equally distribute the same sludge depth across full width of tiers, such that each sample and reject slot of succeeding tier receives equal portions of the discharged sludge.

RESULTS OF TESTS:

A series of thirty tests were made on the new splitter, sixteen of which were taken on splitter incorporating only the first three improvements, and remaining fourteen were taken on splitter incorporating all four improvements. In each test the sample and reject sludge were saved, dried and weighed. In some instances the reject was assayed as a check against the sample to determine whether any appreciable hydraulic classification had occurred.

A tabulation of the thirty tests is given below. Table I shows tabulation of tests made on splitter incorporating the first three improvements, whereas Table II is a tabulation of tests made on splitter incorporating all four improvements. All weights are of dry material.

Table I

New Splitter (3 Improvements)

Hole 1	Depth 2	Size 3	A Split Frac. 4	B Combined Wt.of Reject and Sample 5	AB Product (Calculated) Wt. of Split 6	Actual Wt. of Split 7	Theoret. Wt.of Split based on Diam. of hole 8	Ratio Act.Wt. of split Over Calculated Wt. of Split 9	Per Cent Cu. Sample 10	Per Cent Cu. Reject 11	Per Cent Cu. Difference 12
129E	280	6"	1/16	206.1	12.88	9.00	11.5	69.9			
133E	345	6"	1/8	110.0	13.76	9.9	23.0	71.8	0.37	0.19	0.18
135E	230	6"	1/8	142.7	17.8	13.3	23.0	74.3	0.10	0.02	0.08
126E	310	6"	1/16	409.0	25.55	19.50	11.5	76.3			
131E	285	6"	1/16	199.7	12.5	9.69	11.5	78.6	0.29	0.25	0.04
144E	380	6"	1/16	222.3	13.9	11.0	11.5	79.2	0.34	0.34	0.00
142E	235	6"	1/16	207.0	12.9	11.0	11.5	85.0	0.30	0.31	0.01
123E	340	6"	1/16	186.6	11.66	10.3	11.5	88.3			
141E	260	6"	1/16	307.3	19.2	17.3	11.5	89.8	0.34	0.35	0.01
140E	525	6"	1/16	194.5	12.2	11.0	11.5	90.0	0.20	0.22	0.02
129E	325	6"	1/16	195.2	12.20	11.00	11.5	90.1			
132E	340	6"	1/16	173.6	10.9	9.69	11.5	90.4	0.29	0.29	0.00
135*	230	8"	1/16	322.5	20.0	18.3	17.6	91.2			
135*	160	10"	1/32	469.3	14.7	13.5	13.6	92.1			
135*	265	8"	1/16	349.5	21.8	20.5	17.6	93.9			
126E	300	6"	1/16	203.8	12.72	12.00	11.5	94.3			
						Average.....		84.7	0.278	0.246	0.042

*Hole 135 is churn drill hole on Oxide Deposit. All other holes on El Tiro Deposit.

Comparing column 6 (weight of sample calculated by the split fraction) and column 7 (actual weight of split) it is apparent that the new splitter tends to produce an undersized sample. Column 9 (ratio of column 7 over column 6, in percent) indicates that column 7 varies from 6% to 30% lower than column 6. Although the new splitter tends to produce an undersized sample, more consistent results were obtained as compared to the erratic and wide-varying results of fifteen tests made on the old splitter. Average efficiency of the sixteen tests is 84.7%.

Table II
New Splitter
4 Improvements - (Baffles)

Hole 1	Depth 2	Size 3	A Split Fract. 4	B Combined Wt.of Reject and Sample 5	AB Product (Calculated) Wt.of Split 6	Actual Wt.of Split 7	Theoret. Wt. of Split based on Diam. of Hole 8	Ratio Act.Wt of split over calculated Wt.of Split 9	Per Cent Cu Sample 10	Per Cent Cu Reject 11	Per Cent Cu Difference 12
121E	265	6"	1/16	231.0	14.4	12.5	11.5	~~86.8~~			
145E	310	6"	1/16	201.5	12.6	11.00	11.5	87.3	0.43	0.48	0.05
146E	195	8"	1/16	290.1	18.2	16.2	17.6	89.0	0.52	0.54	0.02
145E	345	6"	1/16	197.44	12.34	11.19	11.5	90.7	0.24	0.22	0.02
136*	235	6"	1/16	242.5	15.2	14.0	11.5	92.4			
136*	225	6"	1/16	260.3	15.3	14.5	11.5	94.8			
123E	295	6"	1/16	237.5	14.8	14.3	11.5	96.0			
147E	240	6"	1/16	230.8	14.4	14.3	11.5	99.2	0.24	0.29	0.05
149E	285	8"	1/16	690.0	43.1	43.0	17.6	99.7	0.27	0.29	0.02
143E	350	6"	1/16	215.0	13.4	13.5	11.5	100.4	0.48	0.47	0.01
122E	475	5"	1/8	124.0	15.5	16.0	12.3	103.2			
121E	280	6"	1/16	207.6	13.0	13.5	11.5	103.8			
136*	195	6"	1/16	115.8	7.2	7.8	11.5	106.9			
122E	380	6"	1/16	196.5	12.3	13.5	11.5	109.8			
					Average			97.6%	0.363	0.382	0.03

* Hole 136 is churn drill hole on Oxide Deposit. All other holes on El Tiro Deposit.

Column 9 (previously explained) of Table 2 indicated that column 7 varies from 10% higher to 14% lower than column 6, and that an average efficiency of 97.6% was obtained, which further indicates that this splitter incorporating all four design changes more nearly approaches a true split. Sludge density might account for the oversize and undersize samples in that the baffle might fail to properly distribute a thicker sludge across the width of the tier, thus permitting more sludge to enter either the sample slots or reject slots.

In columns 10 and 11 of both tables the copper content of the split (sample) and the reject are respectively listed. Average difference for Table I is 0.042%Cu, and that of Table II is 0.03%. Combined average difference for Table I is 0.032% Cu, and that for Table II is 0.019% Cu. Differences are within allowable assay limits and results compare favorably tests made on old splitter. Results further substantiate Mr.Courtright's conclusion that the wet split is an acceptable representative of the entire sample in respect to copper content.

The following table compares average results of the three splitters: (1) the old; (2) the new splitter with three design changes, and (3) the new splitter with four design changes.

Splitter	Number of Tests	Ratio (actual Wt. of split over Calculated Wt. of split)	Percent Copper		
			Sample	Reject	Average Difference
1	15	131.5%	0.98	1.00	0.06
2	16	84.7%	0.278	0.246	0.042
3	14	97.6%	0.363	0.382	0.030

CONCLUSIONS:

In conclusion it is pointed out that although the new design showed no change in accuracy in respect to the copper content of the sample, the greater weight accuracy is an important feature. In churn drilling, occasionally soft areas are encountered which results in appreciable overbreak or sloughing in the hole. The accuracy of the assay in these instances is open to more question than where the hole is of correct size. In securing a sample that has a weight corresponding to the fraction of the entire sample which it represents, the amount of overbreak or sloughing in the hole may be determined by nothing more than the dry weight of the split sample.

The light weight construction of this splitter permits flexible handling and moving by one sampler as compared to the heavier construction of the original splitter.

R. E. MIERITZ

Copied at Tucson, Oct. 29, 1951

R.E. Mieritz

INTRODUCTION

Early in 1948 the Company undertook drilling a series of churn drill holes on the Oxide property, a porphyry copper deposit located at Silver Bell, Arizona. The principal purpose of this test work was to check the grade and continuity of the ore body as defined by churn drilling in the year 1909. General geological work and diamond drilling at El Tiro were included in the project; however, this report concerns only the chrun drilling and sampling, and is designed to provide for those interested a description of the methods used and a summary of the results obtained to date.

Those comprising the staff on the combined project are: R,E.Mieritz, J.V.DESVaux, J.C.Playter and the writer.

GENERAL FEATURES OF THE DEPOSIT

Location and Geology

The Oxide deposit, a disseminated sulphide copper occurrence situated in the southern portion of the Silver Bell Range at 2900 feet altitude, owes its commercial grade entirely to processes of supergene enrichment. It compares favorably in grade to other deposits in the Southwest of the same type and origin, but is relatively small in size. Horizontal dimensions of the ore body are approximately 1200 feet by 2000 feet; average thickness 125 feet. Oxidation and leaching extends to an average depth of 100 feet. The present ground water level stands at an elevation of 2500 feet, or about 400 feet beneath the surface.

The chief ore mineral, chalcocite, associated with pyrite and minor chalcopyrite, occurs as narrow veins, stringers and discrete grains in a moderate to strongly altered group of rocks which includes monzonite, dacite, porphyry, alaskite and a series of valcanic flows and tuffs. The mineralized intrusive rocks occupy a major northwest "break", marked by Paleozoic limestone on the north and Cretaceous shales and volcanics on the south. El Tiro, a deposit similar to the Oxide, is situated on the same structure, three miles to the northwest.

The northern one-third of the deposit (Copper Girl Hill) is characterized by numerous moderate to steep-dipping mineralized faults in silicified igneous rocks containing inclusions of metamorphosed sediments. A larger proportion of the chalcocite occurs as narrow high grade veins and the distribution of ore is generally more irregular than in the southern two-thirds of the deposit, where a more uniform blanket of sulphide enrichment exists.

Early Drilling

Around 1901 a total of 71 churn drill holes averaging 275 feet in depth were completed in and near the deposit by the Oxide Copper Company. These holes, eight inches or less in diameter, were drilled without casing, except where excessive caving of the walls occurred. Data on "Churn Drilling at Silver Bell" from Peele's Handbook is listed in the appendix of this report.

CHURN DRILLING

Equipment and Supply

The present drilling program was started in April, 1948, and by the end of December thirty holes averaging 356 feet, a total of 10,700 feet, were completed. Two Bucyrus 24-L, semi-mounted Diesel powered churn drill rigs are operated two 8-hour shifts each per day by the contractor, R.H.Wininger. The drilling crew consists of one driller and one helper for each of the four shifts, one arc welder and one foreman, a total of ten men. Equipment includes two 3-ton service trucks with steel beds, "A" frame and power winch, one 500-gallon water tank truck, one pickup truck, two portable electric light generators, one portable arc welder, drilling tools and steel casing. Water for drilling and sampling purposes is obtained by the contractor from the camp storage tank, one and one-half miles southeast of the Oxide deposit.

Drill bits used include the standard paddle type, the star, the spiral paddle and the spiral star. The spiral and the star types allow less side motion in the shank and thus tend to drill a straighter hole than the standard paddle bit in ground of non-uniform hardness. Bit gauge and cutting edge are restored by electric welding.

Drill rig locations (level areas measuring 24 feet by 50 feet) and service roads are constructed by the Company. The work is done on a rental basis for fully manned equipment, including one RD-8 caterpillar, one 230-cu ft. portable compressor and two jack hammers. Blasting powder was included as a separate charge. At the present time drilling and blasting are done on contract at the rate of $1.75 total cost per cubic yard of bedrock removed.

Operation

Holes are collared and drilled 12-1/2 inches in diameter through the leached capping into the sulphide ore zone, a distance of around 100 feet; 10-inch (ID) casing is installed and the drilling continued for 30 feet with a 10-inch bit. At this point a 35-foot liner (section of casing that does not reach the surface) is lowered and the drilling continued with an 8-inch bit. Subsequently this process is repeated with 7-inch and 5-inch pairs of bits and liners. If the bottom of the ore zone is not reached in the 5-inch hole, one or more liners are pulled and the hole straight reamed to the bottom. In such instances a liner of sufficient length to protect the open section of hole is lowered and the drilling resumed, using the 30-foot interval as before. Holes are drilled without casing for a distance of from 50 to 100 feet below the lower limit of the chalcocite zone, in the lean primary mineralization.

After the first 12 holes were completed the liner interval was increased to 35 feet, making a total of 105 feet for the series of three liners. As the 10-inch casing is usually placed 10 or 15 feet below the top of the ore, the 5-inch bit often reaches through the ore, eliminating the necessity of reaming.

In the drilling on Copper Girl Hill hard silicious "ribs" were frequently encountered. These often deflected the bit; in such cases, blasting was required to straighten the hole.

A company engineer controls such phases of the work as location, size and depth of the hole, casing, reaming and sampling. The depth of the hole reported by the driller is checked at 200-foot intervals with a steel tape.

SAMPLING PROCEDURE

Bailing

A dart valve bailer is used to remove the sludge from the hole at 5-foot intervals. The driller is required to make not less than four passes and to continue in any case until less than three gallons is discharged from the bailer.

Splitting

Sludge, discharged from the bailer into a metal lined dump box, is conveyed by launder to a 4-tier Jones type splitter. The objective in wet splitting is to obtain a representative portion which will average around 12 pounds, dry; however, due to wide variation in the gravity of the sludge, the weight of the dry sample varies considerably. Normally, the sample from a 12-1/2-inch hole is split seven times; from a 5-inch hole, three times. Seven splits produce a sample representing 1/128 of the original; three splits, 1/8 of the original.

Sampler's Duties

The sampler, employed by the Company, collects each sample in a 5-gallon milk can and attaches a tag bearing the hole number and the sample depth. His duties also include: cleaning and leveling the splitter and launder, panning a portion of the reject for field examination by the engineer in charge, and keeping a complete record of the drilling operation and sampling on a daily shift report form, a copy of which is included in the appendix of this report.

SAMPLE TREATMENT

Drying

The wet samples, varying from two to four gallons, are dried on four steam heated cast iron tables, 34 inches square, in the sample room at the camp. Steam is generated by a 5 h.p. fully automatic Butane-fired boiler, operated at 22 lbs. maximum pressure. The temperature of the sludge varies from 212 degrees F. when wet to a maximum of 240 degrees F. when dry.

As the sample dries on the plate, the cake is crushed by means of a metal hand-operated roller. About four samples per hour can be handled on the four tables.

The dry sample is divided into four parts by a Jones type splitter. Two parts are stored in 1-quart fruit jars for future reference; one part is pulverized for assay, and the remaining part is used for washing and concentrating the sludge board sample.

Assaying

A pulp sample, weighing five or six ounces, is sent to the Umpire Laboratory in El paso for electrolytic determination of total copper; one duplicate is sent to Jacobs' laboratory in Tucson for non-sulphide copper determination and for an ore-run composite which includes total and nonsulphide copper, gold, silver, molybdenum, iron, sulphur and insoluble. The Jacobs laboratory employs the permanganate method in determining total copper, and the sulphurous acid method in determining non-sulphide copper.

Sludge Boards

A one-pound portion of the dry sludge sample is washed free of slime. The wet sands are weighed, an allowance made for moisture, and the loss in weight recorded as approximate slime percentage. A small portion of the clean rock fragments, and the panned concentrate 1-inch wide and 2-1/2 inches long in the groove of the pan are dried and later glued to a pine board, 50-inches long, 3-1/2 inches wide and 1/2 inch thick. Each sample, representing five feet of churn drill hole, is applied as a 1/2-inch band to the board. Sample depths and assays are inked on the margin next to the concentrate.

Records

The composite log, compiled from (1) the daily shift report; (2) the geologic log; (3) the assay log, and (4) the survey data, represents a condensation of useful information pertaining to the hole. The data is drafted on a letter-sized tracing sheet which provides as many duplicates as desired. Sample copies of the composite log, geologic log and the daily shift report are attached to this report.

The sludge board constitutes a miniature column of rock material and concentrate representative of the hole. It serves as convenient reference during progress of the hole and as a permanent, visual record of the ore minerals, gangue minerals, and rocks encountered. Since the ratio of concentration is approximately the same in each sample, a rough quantitative appraisal by eye, of the copper in the concentrate band on the sludge board, is possible.

The geologic log is prepared by sight and microscopic examination of the samples. A binocular microscope is used to identify small amounts of the various sulphide and oxide copper minerals. The petrographic microscopic is used principally to identify diagnostic heavy minerals in the panned concentrates. The most useful of these heavy minerals is zircon, which occurs in nearly all igneous rocks as small euhedral crystals, and in certain sedimentary rocks as small rounded detrital grains. Thus far, this type of investigation has aided in determining silicified limestone to be the formation that is chiefly responsible for the irregular form of the chalcocite ore body along the northern fringe. The limestone contains a minor amount of primary copper as chalcopyrite, but due to its dense siliceous nature, was impermeable to supergene enrichment.

An occasional sulphide concentrate is sent to the University of Arizona for briquetting. Polished surfaces examined microscopically under reflected light determined the chief copper mineral to be

supergene chalcocite which occurs essentially as a replacement of chalcopyrite and pyrite.

Labor

Three men are employed in processing around thirty samples per day, including fifteen diamond drill samples. An effort is made to secure young engineers, either student or graduate, for field and laboratory work.

ACCURACY OF SAMPLES

Bailing

The dart valve of bailer normally leaves 12 to 18 inches of sludge in the hole. To determine the effect of this remnant on the succeeding sample, a series of tests were conducted as follows:

After all of the sludge obtainable with the dart valve type had been removed from the hole, the remaining sludge was recovered by sand pump (suction bailer), a comparatively slow and tedious means. The remnant was dried, weighed and assayed, and the results compared to those obtained from dart valve bailer sample.

No.of tests	Av.dry wt. of total dart valve Sample	Av.dry wt. of total Sand pump Sample	Assay Dart Valve Sample	Assay sand pump Sample
18	317.0 lbs	9.0 lbs	0.93% Cu	0.96% Cu

The foregoing results indicate that no appreciable concentration of copper occurred in the remnant through hydraulic classification, and that the weight of the remnant was not sufficiently great to materially affect the succeeding sample, had it been allowed to remain in the hole. It is concluded that in the sampling of "low grade" copper ores the dart bottomed bailer is an acceptable tool for recovering the sample. However, adequate supervision must be provided to insure that all sludge possible is removed from the hole with any type of bailer: a common tendency among drillers is to avoid bailing the hole clean so that a higher gravity liquid will be available for the start of the next run. The rate of advance is comparatively slow until the water added at the start of the run thickens with mud from the drilling. The mud tends to carry the cuttings away from the face of the bit and this permits more efficient drilling and more rapid progress.

Wet Splitting

To obtain a comparison between the sample from the splitter and the rejects, in a number of cases the entire reject was dried, weighed and assayed. A tabulation of these tests is given below. All weights are of dry material.

Hole 1	Depth 2	Size 3	A Split Fraction 4	B Combined Wt. of Reject and Sample 5	Product of AB (Calculated Wt. of split 6	Actual Wt. of Split 7	Theoretical Weight of Split based on Diam. of hole 8	Per Cent Cu Split 9	Per Cent Cu Reject 10	Per Cent Cu Difference 11
				WEIGHT IN POUNDS						
123	115	12-7/8"	1/32	745.25	23.29	23.50	22.56	1.23	1.41	.18
	120	12-7/8"	1/16	712.81	44.55	57.06	45.12	1.24	1.29	.05
	125	10"	1/16	623.25	38.95	50.75	27.25	1.17	1.19	.02
119	145	6-1/2"	1/16	151.37	9.46	13.6	11.50	0.87	0.94	.07
	165	6-1/2"	1/16	208.62	13.04	21.12	11.50	1.13	1.06	.07
109	240	6-1/2"	1/16	208.62	13.04	25.12	11.50	0.92	0.95	.03
	250	6-1/2"	1/8	132.62	16.58	21.12	23.00	1.03	1.05	.02
	260	6-1/2"	1/8	167.62	20.95	26.62	23.00	0.78	0.78	.00
	300	6-1/2"	1/8	141.62	17.70	22.12	23.00	0.80	0.78	.02
	270	4-3/4"	1/8	128.62	16.08	18.62	12.25	1.33	1.20	.13
	280	4-3.4"	1/8	97.37	12.17	13.88	12.25	0.84	0.86	.02
	290	4-2/3"	1/8	111.88	13.99	15.88	12.25	0.85	0.90	.05
107	285	4-2/4"	1/16	88.81	5.55	8.06	6.12	0.19	0.14	.05
106	220	4-3/4"	1/16	100.56	6.29	8.32	6.12	1.26	1.41	.15
105	250	4-3/4"	1/8	110.81	13.85	15.81	12.25	1.04	1.01	.03
					Average			0.98	1.00	.06

In the above table the inaccuracy of the splitter in respect to weight is apparent in the two columns (6 and 7) showing a comparison between the weight of the sample calculated by the split fraction and the actual weight of the split. The latter is 10% to 90% higher than the former in most cases. The tendency to produce an oversize sample appears to be due to the splitter design which allows the sludge to strike the backs of the reject slots at right angles, causing a portion of the reject to boil over into the sample slots. A new splitter under construction is designed to correct this condition.

The presence of overbreaking or caving in the sample is noted by comparing column 8, theoretical weight based on diameter of the hole, to column 6; for instance, in hole No. 123 at 125 feet, the split fraction (calculated from the rejects) weighed 38.95 pounds; 1/16 of the theoretical weight of a 5-foot column of rock 10-inches in diameter (2.6 gravity) is 27.25 pounds, a 43% indicated dilution. Most of the above samples are, however, within a reasonable range of the theoretical weight.

In columns 9 and 10 of the copper contents of the split and the reject are listed. The average variation is .06% Cu; the combined average difference, .02% Cu. Allowing for a margin of error in securing and assaying a pulp from the rather large volume of sludge reject, the results indicate that the wet split is an acceptable representative of the entire sample in respect to copper content.

Drying

The process previously described, wherein the sample is dried at a maximum of 240 degrees F., eliminates to a large extent possible oxidation of the sulphides and loss of water of crystallization in the clays, incurred in open fire drying.

It is here of interest to note that tests conducted on duplicate samples by Magma and Inspiration Copper at San Manuel showed that the average total Cu assay for 150 feet of hole was 1.24% for the steam-dried portion and 1.33% for the fire-dried portion. This 7% increase in total copper content was probably due mainly to the driving off of the water of crystallization contained in the clays by the excessive heat of the open fire method. The steam-dried portion assayed an average of .30% non-sulphide, and the fire-dried .32%, a 6% increase which might have been due either to the oxidation of sulphides or to loss of water of crystallization. In both of the foregoing tests the average difference was a true reflection of the trend present in the series of 30 samples assayed; that is, the higher average for the fire-dried series was not due to the effect of a few erratic assays.

Assaying

Duplicate samples from the first twelve holes were assayed for total copper by Jacobs in Tucson (permanganate method) and by the Umpire Laboratory, El Paso (electrolytic method). The average difference in each hole is noted in the following list:

CDH No.	No. of Samples	Average difference per 5-foot sample % Cu	
		Tucson	El Paso
101	55	0.0	.017
102	75	.014	.0
103	45	.0	.013
104	28	.0	.016
105	89	.0	.001
106	59	.0	.019
107	75	.0	.049
108	58	.0	.041
109	75	.0	.079
110	80	.0	.068
111	86	.0	.072
112	61	.0	.042
Average	796	.0	.035
"	101 to 106 incl.	.0	.005
"	107 to 112 incl.	.0	.059

It is to be noted in the above comparison that the El Paso results were persistently higher, with the exception of hole No. 102; also a sharp increase in the difference occurred in the results from the last

six of the twelve holes. The average of .035 on the "high side" for El Paso agrees rather closely with a comparison of Tucson composites (ore runs) for twenty-seven holes, and the corresponding averages of individual samples assayed at El Paso, as follows:

Jacobs, Tucson - average of 27 composites.....	1.043% Cu
Umpire Lab. El Paso - average of individual samples in the 27 composites	1.080% Cu
Difference	.037% Cu

No independent checks were made on the non-sulphide copper determinations by Jacobs. These, at the start, were made by dilute sulphuric acid leach; later the sulphurous acid method was adopted. A check of previous determinations showed that the sulphuric method produced persistently higher results than the sulphurous method. This was apparently due to the dissolution of all or part of the finely divided chalcocite during the sulphuric acid leach.

Effects of Casing

In general practice, when there is cause to suspect the accuracy of churn drill samples, underreaming is used to permit the casing to follow the drill bit and protect the sample from contamination. Kennecott Copper Corporation employed this method extensively at Chino and Bingham Canyon. Usually the hole is underreamed in 20-foot sections corresponding to the common length of casing joints, however, it is impractical to extend the reaming process to the bottom of the hole, due to the fact that the underreaming bit cannot advance when the hole below it fills up with cuttings. To remove these cuttings and continue the underreaming the tools must be changed (twice), the hole redrilled, and the sludge bailed out -- a process involving considerable time and excessive cost per foot of advance. Thus, in practice, the casing lags at least ten feet behind the drilling, failing at any time to protect the walls of the hole around the shoulders of the bit where the surging action of the sludge is at a maximum. In view of this, and other undesirable features, such as the higher cost per foot compared to the short liner method, underreaming was not employed in the Oxide drilling.

The system of casing described under drilling "Operation" was designed as a means of gauging the accuracy of the churn drill sample, by providing for analysis, a large number of samples drilled under specified lengths of open hole. Every sixth sample, drilled immediately after a liner is run, is completely protected from possible contamination from the salls of the hole above; the preceding sample is exposed to 25 feet of uncased hole.

A comparison of these two samples by copper assay provides a means of measuring in an approximate manner the amount of salting in terms of copper content. If the ground is susceptible to salting, i.e., an appreciable percentage of the ore minerals occur as relatively soft, friable veins or pockets in the host rock, the sample taken below the liner will show a drop in assay value equal to the amount of "extraneous" copper introduced into the unprotected sample taken just before the liner is run. Due to the lack of uniformity in copper content, any one pair of samples is of little significance; however, over 100 pairs have been

pairs have been obtained and persistent trends are discernible in the two areas previously described as showing some difference in copper occurrence, i.e., concentration of copper in veins is more prevalent in Copper Girl Hill than in the area to the south.

In the 21 holes drilled in the area south of Copper Girl Hill, comprising two-thirds of the Oxide Deposit, 82 pairs of samples were obtained for comparison; in 41 pairs the "before casing" samples ran higher than the "after casing" samples, with an average difference of .21% Cu; in the remaining 41 pairs the "before casing" ran lower than the "after casing" samples with an average of .15% Cu difference. The distribution of "highs" and "lows" was in exact balance; however, the 82 "after casing" samples contained an average of .03% less copper than the "before" samples. Since the series of tests in each hole was started in around 1.00% Cu and discontinued in around 0.4% Cu material, 90 to 105 feet below, the arithmetical average drop in grade would be .03% Cu per 5-foot sample. This is precisely the amount of drop in the "before" and "after" comparisons; therefore, the results balance and no salting is indicated.

The foregoing conclusion is supported by comparisons between old and new drilling results in the same area. The average of three section lines of old holes compared very closely to two intervening parallel sections of new holes as follows (refer to 400 scale plan):

	Average thickness of ore	Average Grade
Old holes (19) on Sections C-C, D-D and F-F	129.0 ft.	1.144% Cu
New holes (12) on Sections B-B and H-H	124.6 ft.	1.213% Cu

On Copper Girl Hill, comprising the northern one-third of the Oxide area, salting was evidenced in the "before and after" casing comparisons. In 47 pairs of samples, 18 showed an increase in copper content after casing, and 29 showed a decrease. After deducting .03% Cu for the normal drop in each sample, an average of .043% Cu remained as the percentage of copper to be deducted from each sample to compensate for the indicated salting. It is not considered that this factor is necessarily close to a true average due to the small number of samples on which it is based; however, a definite tendency toward salting is evident in the new drilling in this particular area.

A comparison with old drilling further confirms the trend on Copper Girl Hill, with an average difference of 35% in grade as follows:

<u>Old Holes (drilled without casing)</u>

Nos. 47, 43, 41
62, 58, 54 - 808' ore - 1331.5 grade ft = 1.65% Cu. av. grade.

<u>New Holes (with casing)</u>

Nos. 107, 109, 110
119, 121, 122 - 725' ore - 781.4 grade ft = 1.08% Cu.Av.grade.

A total of 11 holes were drilled on two section lines on Copper Girl Hill; five of these, however, were in waste or submarginal material and were not included.

While the foregoing comparison is based on a comparatively small number of holes, the indicated reduction factor of 35% agrees rather closely with conclusions reached by Kruttschnitt in weighing the 130 level Copper Girl drift raise and cross-cut samples representing 2130 ft., against the grade of old churn drill holes in the same area. The 130 level samples averaged 34% lower than an average of the churn drill samples.

Samples from a series of five raises, driven on old churn drill holes by the Oxide Copper Company, averaged 6% lower than the corresponding churn drill samples. However, the trend was not uniform: two of the 20-ft raises ran higher than the drill samples, two lower, and one was equal.

The apparent inaccuracy of the samples from the early drilling on Copper Girl Hill may be attributed principally to the prevalence of copper-bearing veins in the area, combined with open hole drilling; frequent blasting in the siliceous zones may have been a contributing factor.

Summarising, the data obtained from recent drilling does not represent sufficiently thorough sampling to arrive at a precise reduction factor for old drilling, due principally to the excess irregularity of the chalcocite occurrence. However, the presence of some salting in the old drill samples is the logical conclusion. It is recommended that for the purpose of calculating ore reserves, (1) all of the old churn drill results over 1.2% Cu in the vicinity of Copper Girl Hill, north of Section H-H, be reduced 35% in grade, and (2) all of old drill results south of Section H-H, and all recent drill results in both areas be accepted at face value. The application of the reduction factor need not be uniform; higher assays may be reduced by a greater amount. However, the net effect should be an overall reduction in grade of at least 25%. This is believed to be, taking all factors into consideration, a sufficiently conservative basis on which to establish the average grade within the known deposit. To firmly establish a tonnage figure and limits of minable ore, a few additional drill holes are required around the margins of the deposit.

In applying the short interval liner system of casing to deposits of greater thickness than 150 feet, considerable straight reaming, installing and removing of liners would be entailed. To determine the susceptibility of the ground to salting, every third or fourth hole might be cased on short intervals and the rest drilled open.

J. H. COURTRIGHT

Addendum:

Since the foregoing was written, the sludge splitter designed to provide a more accurate split in respect to weight (page 6) was completed and tested. In five different sludge runs the split sample varied from 89% to 94% of the correct weight, or an averag of 92%, which represents a considerable improvement over the design formerly used. A separate description of the new splitter, which differs from the old mainly in having a steeper pitch to the series of Jones-type units, will be provided for the files.

TABULATION OF CHURN DRILL DATA AND COSTS
Silver Bell, 1948

Operational

Number of Holes Drilled		30.
Average depth		356.0 ft.
Total footage		10700.0 "
Total No. 8-hr shifts		757.0 "
Average advance per shift		14.1 "
" " " " 1st 5000 ft		11.7 "
" " " " 2nd 5000 ft		16.6 "
Water consumption per shift		300.0 gallons
Drilling	(61.0%)	3694.1 hours
Moving	(7.6%)	460.3 "
Reaming	(7.5%)	454.2 "
Running casing and liners	(9.2%)	557.2 "
Delays, repairs, fishing, etc	(14.7%)	890.2 "

Costs:

Contract drilling	$ 7.00 per ft.drld.
Casing - $ .20 per ft., running or pulling Liners - .50 " " " " " Reaming- 7.00 " " " " "	1.28 " " "
Service roads and locations	1.05 " " "
Sampling and sample processing	1.01 " " "
Assaying	.72 " " "
Engineering, geology and supervision	.80 " " "
Camp operation and maintenance	1.05 " " "
T o t a l	$12.89 " " "

Note: Camp construction and preparation for drilling not included in above items.

Appendix

CHURN DRILLING AT SILVER BELL, ARIZONA
(Peele's Handbook, 1918)

Operation

Number of holes drilled	62
Total feet	14256
Total drill days	579
Average depth of holes, ft	229.9
Average footage per day	24.61
Average footage per ton of coal	22.97
Gallons water per day (including steam boiler)	2200
Hours consumed drilling (62.5%)	9071
" " delays, moving, repairs, etc. (37.5%)	4825

Costs:

Labor on drills	$ 1.25 per ft.
Supplies	.17
Pipe Line	.09
Repairs	.07
Fuel	.35
Renewals	.12
Roads	.47
Total	$ 2.52

Note: The above data was probably obtained from drilling at El Tiro
Average footage "per day" refers to two 12-hour shifts, or 24.61 feet in 24 hours.

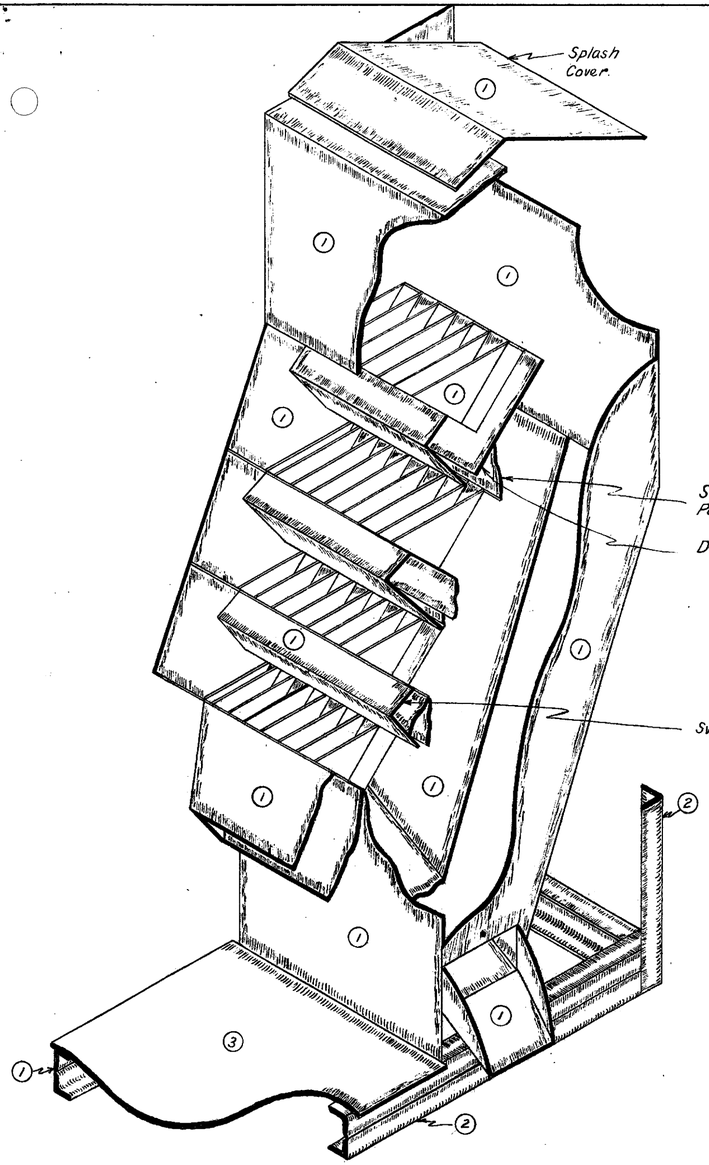

NOTE

Material used in construction of splitter.

1. 16 gauge black sheet iron for splitter housing, tiers, baffles, discharge lips, sample and reject discharges.
2. $1\frac{1}{2}$" equal leg x $\frac{3}{16}$" angle irons for splitter frame and reinforcements as shown.
3. $\frac{1}{8}$" Diamond floor plate.

Welded construction used throughout except for joining of sample and reject dividers of tiers which were solder sweated.

Hinges used for splash cover and baffles are $1\frac{1}{2}$" butts welded in place.

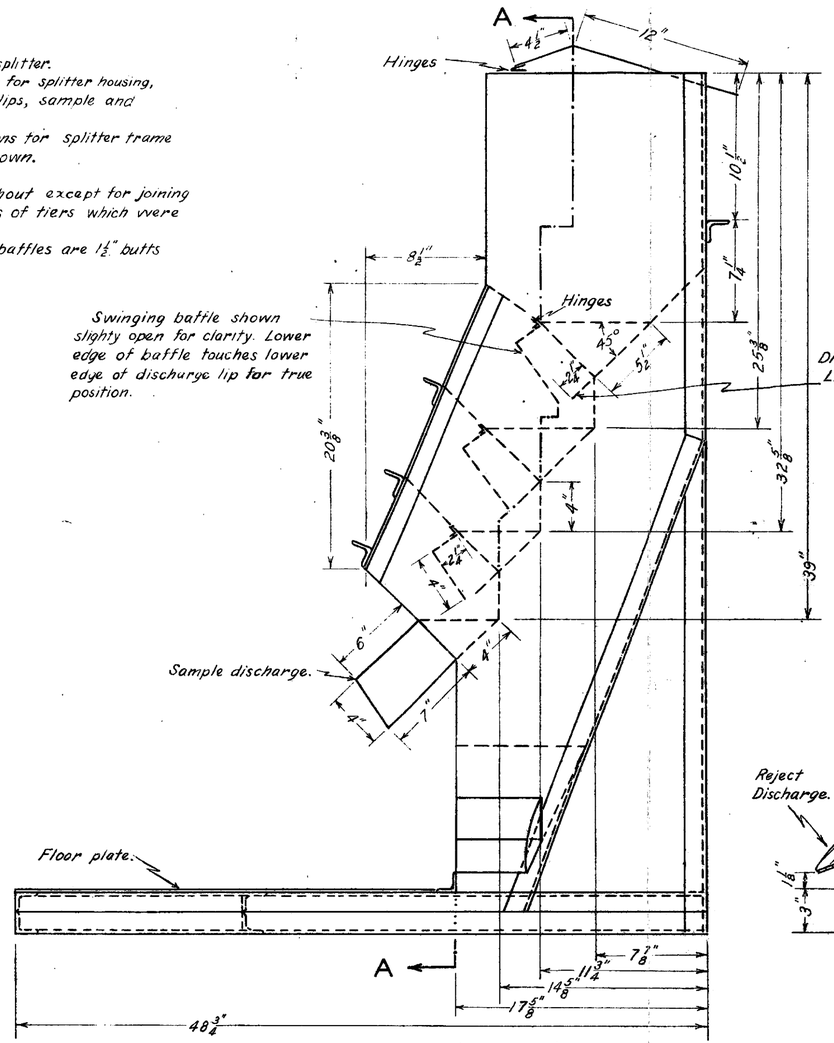

SIDE ELEVATION

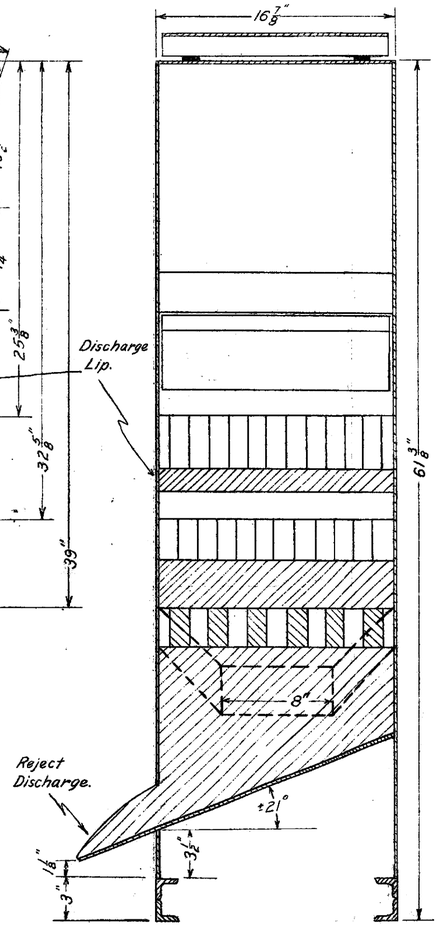

SECTION A-A

DESIGN OF CHURN DRILL SLUDGE SPLITTER

American Smelting and Refining Company

Scale $1\frac{1}{2}$" = 1' April, 1950

DESIGNED BY J. H. COURTRIGHT AND R. E. MIERITZ
DRAWN BY R. E. MIERITZ

File No. S-214-2A