CONTACT INFORMATION
Mining Records Curator
Arizona Geological Survey
1520 West Adams St.
Phoenix, AZ 85007
602-771-1601
http://www.azgs.az.gov
inquiries@azgs.az.gov

The following file is part of the

Arizona Department of Mines and Mineral Resources Mining Collection

ACCESS STATEMENT

These digitized collections are accessible for purposes of education and research. We have indicated what we know about copyright and rights of privacy, publicity, or trademark. Due to the nature of archival collections, we are not always able to identify this information. We are eager to hear from any rights owners, so that we may obtain accurate information. Upon request, we will remove material from public view while we address a rights issue.

CONSTRAINTS STATEMENT

The Arizona Geological Survey does not claim to control all rights for all materials in its collection. These rights include, but are not limited to: copyright, privacy rights, and cultural protection rights. The User hereby assumes all responsibility for obtaining any rights to use the material in excess of "fair use."

The Survey makes no intellectual property claims to the products created by individual authors in the manuscript collections, except when the author deeded those rights to the Survey or when those authors were employed by the State of Arizona and created intellectual products as a function of their official duties. The Survey does maintain property rights to the physical and digital representations of the works.

QUALITY STATEMENT

The Arizona Geological Survey is not responsible for the accuracy of the records, information, or opinions that may be contained in the files. The Survey collects, catalogs, and archives data on mineral properties regardless of its views of the veracity or accuracy of those data.

Copy No. 4

THE SUPERIOR OIL CO.
MAR 24 1971
MINERALS DIVISION - TUCSON

NEWMONT EXPLORATION LTD.

VOLUME II
CAPITAL AND OPERATING COST ESTIMATES

VEKOL HILLS PROJECT
ARIZONA

P-J File No. 4832-01

March 15, 1971

PARSONS-JURDEN CORPORATION

A WHOLLY OWNED SUBSIDIARY OF THE RALPH M. PARSONS COMPANY

ENGINEERS-CONSTRUCTORS

NEW YORK

SECTION 1

CLIENT'S REFERENCE DATA

CLIENT'S REFERENCE DATA

The following documents were received from Newmont Exploration Ltd. and were used as a basis for Parsons-Jurden's study:

1. Report of Hellyer and Nabbs dated September 14, 1970, entitled "Pilot Plant Investigations on a Composite Ore Sample from the Vekol Hills Deposit, Casa Grande, Grande, Arizona". This report is accompanied by a memorandum from Hellyer and Nabbs to All Members of the Vekol Hills Committee, dated September 22, 1970, and a memorandum from Nabbs to Tangel, dated September 25, 1970.

2. Estimate prepared by D. M. Shaw, dated April 1, 1970, entitled "N.E.L. Job 52 - Vekol Hills, 20,000 T.P.D. Concentrator".

3. The following Vekol Hills pit plans at a scale of 1" = 200':

725 Median	975 Median	1225 Median	1475 Median
775	1025	1275	1525
825	1075	1325	1575
875	1125	1375	1625
925	1175	1425	1675

4. Vekol Hills geologic plan and the following geologic sections:

E-W	Sec. 2S	N-S	Sec. 6E
E-W	2N	N-S	14E
E-W	6N	N-S	18E
E-W	10N	N-S	2W
N-S	10E	N-S	6W
N-S	2E	N-S	10W

5. Metallurgical Testing of Samples from Vekol Hills Deposit, Casa Grande, Arizona (Progress Reports Nos. 1 thru 4). File No. 240-01, W. C. Hellyer and S. W. Nabbs, Newmont Exploration Limited, Metallurgical Department, Danbury, Connecticut. Dated respectively January 24, March 18, May 25 and July 27, 1970.

6. Feasibility Report, Mining Section, Vekol Hills Project, Newmont Mining Corporation, W. K. Pincock, P.E., dated December 13, 1970.

7. General Arrangement Plan, 1400 Level, Vekol Hills Project, Newmont Exploration Ltd. (Geological, assay and ore reserve plan of the underground drifting and surface drill holes values at the 1400 bench). Scale: 1 inch to 50 feet, dated July, 1970.

8. Geological Sections (An incomplete set showing drill hole data, rock types and ore types on east-west and north-south section.) Scale: 1 inch to 100 feet (poor quality photo reduced reproductions of 1 inch to 50 foot scale sections), not dated.

9. Bedrock Geological Plan (showing topography and drill hole locations). Scale: 1 inch to 500 feet, not dated.

10. Lease Boundary Plan (showing topography and drill hole locations). Scale: 1 inch to 500 feet, not dated.

11. Strip Logs (graphic plots of drill hole assays and geological data for 16 holes). Scale: 1 inch to 50 feet, respective dates.

12. Bench Plans (computer plotter out-put plans for each bench elevation showing bench limits, drill hole locations, and drill hole grades). Scale: 1 inch to 200 feet, dated November 19, 1970.

13. Pit Composite Plans for the pre-production period through to the end of 10th Year Mining. Scale: 1 inch to 200 feet, W. K. Pincock, dated November 27, 1970.

14. Assay Data Sheets (for drill holes within the pit limits). These show assay values for the sample interval and assay values for total copper, molybdenum, silver and gold, respective dates.

15. Letter, Certification Study, Vekol Hills Project (a description of rotary drill hole sampling practices), Newmont Exploration Limited, R. B. Fulton to K. I. Mackenzie, dated February 23, 1971.

16. Memorandum, Parsons-Jurden Study on Vekol Hills (concerning tonnage factors), Newmont Exploration Limited, W. C. Hellyer to R. B. Fulton, dated February 17, 1971.

17. Drill Hole Logs, Sheets R-7, DR-7A, R-9, DR-9A, R-201, DR-201A, Vekol Hills Project, Newmont Exploration Limited, respective dates.

18. Drill Hole Data, Sheets R-7, R-9 and R-201, Vekol Hills Project, Newmont Exploration Limited.

19. Memo (results of the computer check of manually calculated reserves), Vekol Hills Project, Newmont Mining Corporation, J. R. Denny to W. K. Pincock, dated October 9, 1970, with attachment.

20. Memo (results of the computer check of manually calculated reserves), Vekol Hills Project, Newmont Mining Corporation, J. R. Denny to W. K. Pincock, dated December 8, 1970, with attachment.

21. General Arrangement Plan, 1400 Level (same map base as Item 7 with the results of horizontal underground drilling added).

22. Revised Estimate prepared by D. M. Shaw, dated November 1, 1970, including revised estimate backup sheet.

23. The following Drawings:

Dwg. No.	52-1-R-4	Flow Sheet
" "	52-3-R-1	General Layout
" "	52-4-R-0	Utilities
" "	52-4-R-1	Plant Layouts
" "	52-5-R-1	Primary Crusher
" "	52-6-R-1	Secondary Crusher
" "	52-7-R-0	Mill Building - Plan
" "	52-8-R-1	Mill Building - Section
" "	52-9-R-1	13.8 KV and 4.16 KV - One Line
General Area Plan		

24. Letter - E. B. Berger, Papago Tribal Utility Authority to R. Fulton, dated August 25, 1970 with attached proposal.

25. Memo - J. McGue, Papago Tribal Utility Authority to Hecla and Newmont, dated October 6, 1970, describing Electric System Facilities.

26. Draft dated January 19, 1971, titled "Wholesale Power Supply Agreement Papago Tribe".

27. Draft dated January 29, 1971, titled "Construction Agreement".

28. Draft dated February 1, 1971, titled "Operating and Maintenance Agreement".

29. Draft dated January 29, 1971, titled "Guarantees".

30. Undated draft titled "Estimated Power Consumption Vekol Hills".

31. Memorandum, Preliminary Studies of Non-Sulfide Copper Occurrences at Vekol Hills, Arizona, Newmont Exploration Limited, J. W. Ahlrichs to W. C. Hellyer, dated August 24, 1970.

32. Addendum to Table IV, Mineralogical Analyses of Rock Types, Progress Report No. 4 under Item 5 listed above.

33. Geological Section 200E (representative of the sections on which ore reserve measurements were made). Scale: 1 inch to 50 feet.

34. Bench Plan of the 1425 median elevation showing ore blocks per February 1970 reserve calculation. Scale: 1 inch to 200 feet.

35. Bench Plan of the 1425 median elevation showing revisions to ore blocks made during May 1970 ore reserve review.

36. Ore reserve data compilation sheets.

37. Geologic logs for holes on Section 200E.

38. Megascopic Mineralogy of the Vekol Hills Orebody, Arizona, Newmont Exploration Limited, V. V. Vellet, September 23, 1966.

39. Geology and Ore Deposits of the Jackrabit Area, Pinal County, Arizona Graduate College, The University of Arizona, D. F. Hammer, dated 1961.

40. Stratagraphic Relations of the Troy Quartzite (Younger Precambrian) and the Cambrian Formations in Southeastern Arizona, Southern Arizona Guidebook III, Arizona Geol. Soc., M. H. Krieger, dated 1968.

41. List of Holes within the pit perimeter showing the holes and footages surveyed by Tro-Pari.

42. Plan of drill holes to accompany Item 41 above.

43. Laboratory methods used at the San Manuel assay office for determining total copper, oxide copper and molybdenum in samples from Newmont Exploration Limited, Vekol Hills Project, undated.

44. Computer printout sheets relating down-the-hole distances of drill holes to the proposed bench elevations for Newmont Exploration Limited, Vekol Hills Project, undated.

45. 1" - 500' Topo Map showing the pit outline and the waste dump areas.

46. Written quotes from vendors for all of the mining equipment.

47. A capital cost estimate of the mine shop and shop equipment.

48. A capital cost estimate for the mine pit power distribution.

49. Letter, W.K. Pincock to E.H. Tucker, Feb. 20, 1971, re mine auxilliary facilities and equipment replacement costs.

50. Letter, W.K. Pincock to R.B. Fulton, Feb. 20, 1971, re 1250 crusher installation and 7 day mining week.

SECTION 2

METHODS USED BY THE SAN MANUEL ASSAY OFFICE

FOR THE ANALYSIS OF SAMPLES FROM

VEKOL HILLS COPPER PROJECT

SHORT ACIDIC METHOD FOR DETERMINING COPPER

1. Product - for all copper concentrates, Mattes, Mix, and convertor slags use 0.5 gram sample.
   For cleaner tails, molybdenite concentrates and reverberatory slags use 1.0 grams per sample.
   For Mill heads and tails and mine samples use 2.5 gram sample.

2. (a) Reverberatory slags, converter slags, heads, tails and mine samples.

3. (a) Add 10 cc. hydrochloric acid and warm 1 minute on hot plate. Then add 10 cc nitric acid.

4. (a) Digest for 1 minute and then add 1 scoop of ammonium biflouride. Continue digestion for 1 more minute, and then add 10 cc sulphuric acid solution. Take to dense white fumes.

2. (b) All other products.

3. (b) Add 15 cc. nitric acid and heat until brown fumes are about dissipated. . Then add $\frac{1}{2}$ scoop of sodium chlorate.

4. (b) Continue digestion for 1 more minute then add 10 cc. of sulphuric acid solution. Take to dense white fumes.

5. Remove from hot plate and cool. Add about 50 cc. of water and boil until all salts are in solution.

6. Remove from hot plate and cool. Neutralize with ammonium hydroxide and add a slight excess. Add 10 cc. of acetic acid. Mix solution thoroughly by swirling.

7. Heat gently until boiling. Remove and wash down watch glassed with water. Add 1 scoop of ammonium bifluoride and swirl until ferric hydroxide color has disappeared. Cool.

8. Add potassium iodide and titirate with standard sodium thiosulphate using starch solution as an indicator. For all 0.5 gram samples titrate with strong thiosulphate solution and read percentage of copper direct. For 1 gram titrate with strong solution and divide reading by 2 for percentage of copper. For 2.5 gram samples using strong solution divide readings by 5. For 2.5 gram samples using weak solution divide reading by 10.

	Solutions
Sulphuric Acid	- 1 to 1
Starch	- 5 grams soluble starch per liter of water
Sodium Thiosulphate	- Tailings - 9.51 grams per liter of water. All other products - 19.02 grams per liter of water.

METHOD FOR DETERMINING OXIDE-COPPER IN HEADS & TAILINGS

1. Weigh out 2.5 gram sample into a 250 cc. beaker.
2. Add 10 cc. of sulphuric acid solution and agitate thoroughly to break up any lumps that might have formed.
3. Continue agitation about every 10 minutes for 1 hour.
4. Filter through Munktells 1F (or equivalent) into a 250 cc. beaker. Wash residue 4 times with hot water.
5. Place filtrate on hot plate and take to dense white fumes.
6. Continue as for step 5 on short iodide method for copper.

Solutions

Sulphuric Acid Solution	- A 20.0 percent solution
Sodium Thiosulphate Solution	- For titrating predominatly sulphide samples 9.51 grams of sodium thiosulphate per liter. For oxidized samples 19.02 grams sodium thiosulphate per liter.

ALPHA-BENZOIN-OXIME METHOD FOR DETERMINATION OF MOLYBDENUM

1. (a) Product - Mine Ore, Mill Heads, etc., containing less that 0.1% MoS_2 - Use 10 gram sample. Mill Tailings - Use 20 gram sample.

2. (a) Weigh sample into 400 cc. beaker. Add 25 cc. of nitric acid to 10 gram sample (40 cc. of nitric to 20 gram sample). Heat until brown nitrous oxide fumes are given off and then add 1 scoop of sodium chlorate to 10 gram sample (1½ scoops to 20 gram sample), and continue heating until residue is pasty. (Do not take to dryness.)

3. (a) Remove beaker from hot plate and cool. Add 10 cc. of sulphuric acid solution, boil until all salts are in solution.

4. (a) Filter through Munktells 1F filter paper or equivalent into a 250 cc. beaker. Wash 5 times with hot water.

1. (b) Product - 0.1 to 0.5% MoS_2 - Use 1.0 gram sample.
0.5 to 5.0% MoS_2 - Use 0.25 gram sample.
5.0 to 40% MoS_2 - Use 0.10 gram sample.

2. (b) Weigh out sample into 400 cc. beaker. Add 20 cc. nitric acid, and heat until no further brown fumes are given off. Add 1 scoop of sodium chlorate and heat for 5 minutes. Remove from hot plate and cool.

3. (b) Cautiously add 5 cc. of hydrochloric acid and take to dryness; however, do not bake. Cool and add 10 cc. of sulphuric acid solution. Take to dryness and continue heating until no further fumes are emitted.

4. (b) Cool and add 10 cc. of sulphuric acid solution and 50 cc. of water. Boil until all salts are in solution. Filter through Munktells 1F paper or equivalent into a 250 cc. beaker. Wash 5 times with hot water.

5. Cool with ice until filtrate is cold (about 40° F.). Add 10 cc. of alpha-benzoin-oxime solution. This solution should be added slowly with very thorough agitation. Filter immediately through Munktells 1F and wash 4 times with cold water. This filtration and washing should be completed in 10 minutes.

6. Transfer precipitate into original 250 cc. beaker, and add 25 cc. of ammonium carbonate solution. Bring solution just to boil and filter immediately through filter paper from (5) into 250 cc. beaker. Wash 4 times with hot water.

7. Acidify filtrate with sulphuric acid solution using methyl orange as an indicator. Cool solution to about 40° F. in ice, and then precipitate with 10 cc. of alpha-benzoine-oxime solution. Filter immediately as before and wash 7 times with cold water.

8. Place filter paper with precipitate in an annealing cup and ignite at 950° F. for 1 to 2 hours until ignition is complete. Cool and weigh as impure MoO_3.

9. At this point a blank is started. All subsequent steps are carried out on both the sample and the blank.

10. Transfer impure MoO_3 to 250 cc. beaker, and add 25cc. of ammonium carbonate solution. Bring to a boil and filter through Munktells 1F filter paper. Wash 5 times with hot water.

11. Place filter paper with precipitate in an annealing cup and ignite at 950° F. for 1 to 2 hours until ignition is complete. Cool and weigh residue.

12. First weighing (8) minus (second weighing minus weight of blank) equals weight of pure MoO_3. MoO_3 x 1.111 equals weight of MoS_2.

Solutions

Sulphuric acid solution	- 1 to 1 solution.
Alpha-benzoine-oxime solution	- This is a 2 percent solution in methanol.
Ammonium carbonate solution	- This is made up by adding 3 cubes of ammonium carbonate to a liter of 1 to 1 ammonium hydroxide solution.

PARSONS-JURDEN CORPORATION · 26 Broadway, New York 4, N. Y.

COMPUTATIONS

JOB NO. 4832 21 | SHEET NO. 1 OF 1

PLANT Vekol Hill Sample Plant | MADE BY K.M. DATE 8/2/71

SUBJECT Flow Diagram | CHECKED BY _____ DATE _____

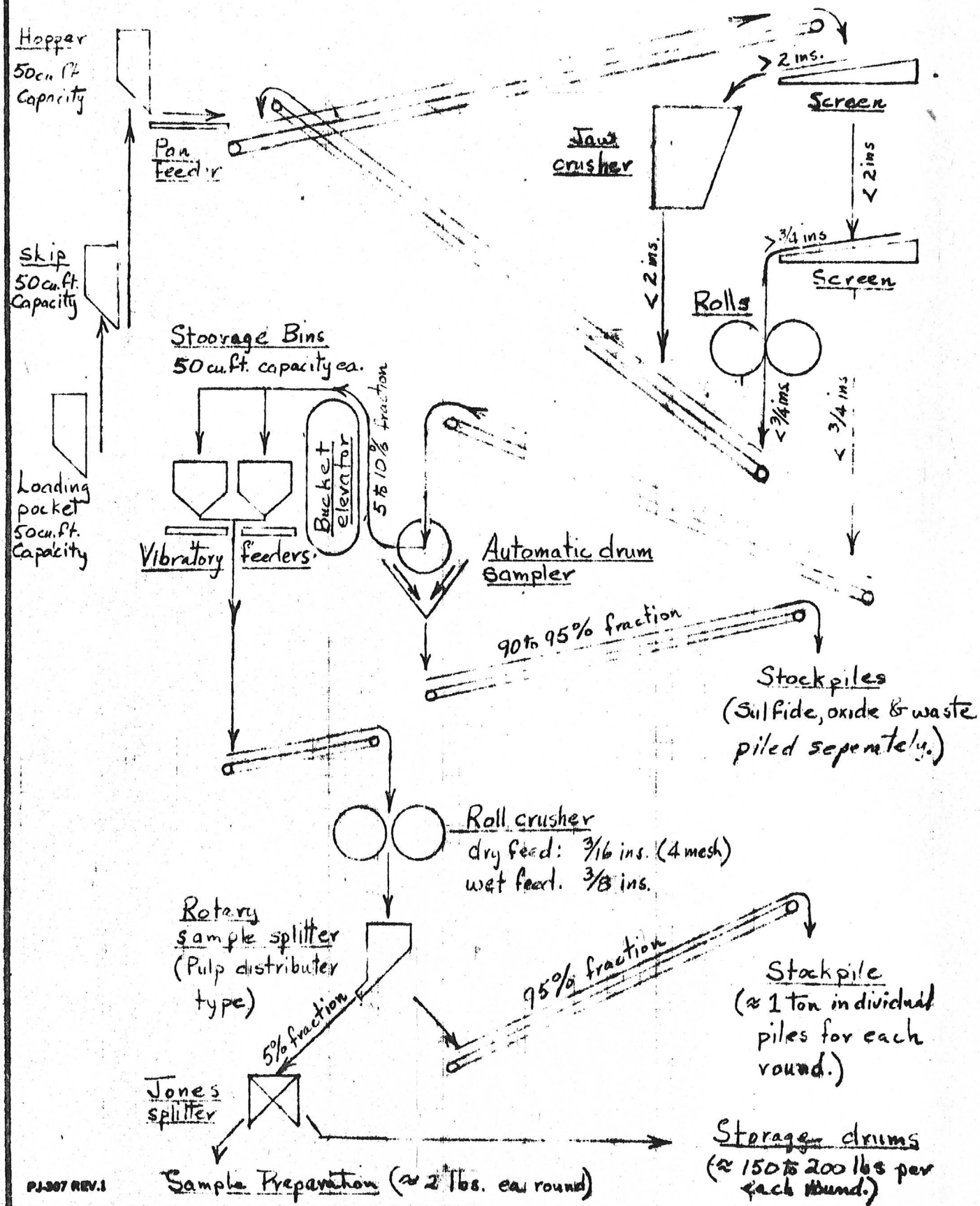

PJ-307 REV.1

SECTION 3

COMPUTATIONS
COPPER CONCENTRATOR
OPERATING COST ESTIMATE

PARSONS-JURDEN CORPORATION · 26 Broadway, New York 4, N. Y.

COMPUTATIONS

JOB NO. 4832-01 SHEET NO. 1 OF 14

PLANT VEKOL HILLS MADE BY GATES DATE 2/19/71

SUBJECT OPERATING COST ESTIMATE CHECKED BY _____ DATE _____

COPPER CONCENTRATOR

		COST/DST ORE MILLED 1972 $	COST/MO. 1972 $
OPERATING LABOR	(41 MEN)	0.0518	31,064
MAINTENANCE LABOR	(22 MEN)	0.0308	18,502
SUPERVISION	(12 MEN)	0.0230	13,817
ASSAYING	(6 MEN)	0.0069	4,162
WEAR IRON:			
CRUSHERS		0.0517	31020
BALL MILL LINERS		0.1163	69780
GRINDING BALLS		0.3224	193440
FLOTATION REAGENTS:		0.0920	55,200
MAINTENANCE SUPPLIES MATERIALS & REPLACEMENTS		0.0875	52500
ELECTRICAL ENERGY: 18.68 KWH/DST AT $0.00871/KWH		0.1627	97620
FUEL OIL		0.0048	2856
TOTAL DIRECT OPERATING COST FOR COPPER CONCENTRATOR		(0.9499) 0.950	569961

PARSONS-JURDEN CORPORATION - 26 Broadway, New York 4, N. Y.

COMPUTATIONS

JOB NO. 4832-01 SHEET NO. 2 OF 14

PLANT VEKOL HILLS MADE BY GATES DATE 2/18/71

SUBJECT OPERATING COST ESTIMATE CHECKED BY _____ DATE _____

TOTAL WORKING DAYS/MAN/YR = 52 x 5 = 260

LESS VACATION TIME: 10 DAYS
LESS SICKNESS & ABSENTEEISM: 10 " } 20

AVERAGE WORKING DAYS/YR/MAN = 240

ASSUMING THE ABOVE ARE PAID VACATIONS AND PAID TIME OFF FOR SICKNESS, THEN REPLACEMENT LABOR WOULD COST AN ADDITIONAL $\frac{20}{240}$, OR 8% OF THE BASIC LABOR COSTS.

IN THE FOLLOWING LABOR COST ESTIMATES, THIS V. & S. FACTOR OF 1.08 HAS BEEN APPLIED.

PARSONS-JURDEN CORPORATION · 26 Broadway, New York 4, N. Y.

COMPUTATIONS

JOB NO. 4832-01 SHEET NO. 3 OF 14

PLANT VEKOL HILLS MADE BY GATES DATE

SUBJECT OPERATING COST ESTIMATE CHECKED BY DATE

OPERATING LABOR

		No. of Men	Hourly Rate: $ 1970	1972	Cost/Day $
PRIMARY CRUSHING PLANT: (5 DAYS/WEEK - 2 SHIFTS/DAY)					
DAY SHIFT:	OPERATOR	1	3.44	4.16	33.28
	HELPER	1	3.18	3.85	30.80
2ND SHIFT:	OPERATOR (12¢ DIFF)	1	3.56	4.31	34.48
	HELPER (12¢ DIFF)	1	3.30	3.99	31.92
	TOTALS	4			130.48

VACATION & SICKNESS FACTOR = 1.08

COST/MONTH: 130.48 × 5 × 4.33 × 1.08 = $3051.

(" " WITHOUT FACTOR = $ 2825)

SECONDARY & TERTIARY CRUSHING: (7 DAYS/WK - 21 HRS/DAY)					
DAY SHIFT:	OPERATOR	1	3.44	4.16	33.28
	HELPER	1	3.18	3.85	30.80
2ND SHIFT:	OPERATOR (12¢ DIFF)	1	3.56	4.31	34.48
	HELPER (12¢ DIFF)	1	3.30	3.99	31.92
3RD SHIFT:	OPERATOR (16¢ DIFF)	1	3.60	4.36	34.88
	HELPER (16¢ DIFF)	1	3.34	4.04	32.32
SWING:	OPERATOR (8¢ AVG. DIFF.)	1	3.52	4.26	34.08
	HELPER (8¢ AVG. DIFF.)	1	3.26	3.94	31.52
	TOTALS	8			263.28

VAC & SICK. FACTOR: 1.08

COST/MONTH: 263.28 × 5 × 4.33 × 1.08 = $6156.

(" " WITHOUT FACTOR = $5700.)

PARSONS-JURDEN CORPORATION - 26 Broadway, New York 4, N. Y.

COMPUTATIONS

JOB NO. 4832-01 SHEET NO. 4 OF 14

PLANT VEKOL HILLS MADE BY GATES DATE

SUBJECT OPERATING COST ESTIMATE CHECKED BY DATE

OPERATING LABOR CONT'D.

	No. of MEN	Hourly Rate $ 1970	Hourly Rate $ 1972	Cost/Shift $
MILL CONTROL ROOM:				
DAY SHIFT: OPERATOR	1	3.54	4.28	34.24
2ND SHIFT: OPERATOR (12¢ DIFF)	1	3.66	4.43	35.44
3RD SHIFT OPERATOR (16¢ DIFF)	1	3.70	4.48	35.84
SWING: OPERATOR (8¢ AVG DIFF)	1	3.62	4.38	35.04
TOTALS	4			140.56

VAC. & SICK FACTOR 1.08

COST/MONTH: 140.56 × 5 × 4.33 × 1.08 = $3287.

(" " WITHOUT FACTOR = $3043.)

GRINDING FLOOR:				
DAY SHIFT: HELPER	1	3.18	3.85	30.80
2ND SHIFT: HELPER (12¢ DIFF)	1	3.30	3.99	31.92
3RD SHIFT: HELPER (16¢ DIFF)	1	3.34	4.04	32.32
SWING: HELPER (8¢ AVG. DIFF.	1	3.26	3.94	31.52
TOTALS	4			126.56

V. & S. FACTOR = 1.08

COST/MONTH: 126.56 × 5 × 4.33 × 1.08 = $2959.

(" " WITHOUT FACTOR = $2740.)

PARSONS-JURDEN CORPORATION · 26 Broadway, New York 4, N. Y.

COMPUTATIONS

JOB NO. 4832-01 | SHEET NO. 5 OF 14

PLANT VEKOL HILLS | MADE BY GATES | DATE 2/18/71

SUBJECT OPERATING COST ESTIMATE | CHECKED BY | DATE

OPERATING LABOR CONT'D.

FLOTATION FLOOR:	No. OF MEN	HOURLY RATE: $ 1970	HOURLY RATE: $ 1972	COST/SHIFT $
DAY SHIFT: HELPER	1	3.18	3.85	30.80
2ND SHIFT: HELPER (12¢ DIFF)	1	3.30	3.99	31.92
3RD SHIFT: HELPER (16¢ DIFF)	1	3.34	4.04	32.32
SWING SHIFT HELPER (8¢ AVG. DIFF)	1	3.26	3.94	31.52
TOTALS	4			126.56

V.$.S. FACTOR = 1.08

COST/MONTH: 126.56 × 5 × 4.33 × 1.08 = $ 2959

(" " WITHOUT FACTOR = $ 2740)

CONCENTRATE DEWATERING, DRYING, LOAD-OUT, & REAGENT HANDLING.

DAY SHIFT: OPERATOR	1	3.44	4.16	33.28
LOAD-OUT HELPER	1	3.18	3.85	30.80
2ND SHIFT: OPERATOR (12¢ DIFF)	1	3.56	4.31	34.48
LOAD-OUT HELPER (12¢ DIFF)	1	3.30	3.99	31.92
3RD SHIFT: OPERATOR (16¢ DIFF)	1	3.60	4.36	34.88
SWING: OPERATOR (8¢ AVG. DIFF)	1	3.52	4.26	34.08
TOTALS	6			199.44

V.$.S. FACTOR = 1.08

COST/MONTH: 199.44 × 5 × 4.33 × 1.08 = $ 4663.

(" " WITHOUT FACTOR = $ 4318.)

PARSONS-JURDEN CORPORATION - 26 Broadway, New York 4, N. Y.

COMPUTATIONS

JOB NO. 4832-01 | SHEET NO. 6 OF 14

PLANT VEKOL HILLS | MADE BY GATES DATE

SUBJECT OPERATING COST ESTIMATE | CHECKED BY DATE

OPERATING LABOR CONT'D.

	No of Men	Hourly Rate: $ 1970	1972	Cost/Shift $
TAILING DISPOSAL:				
DAY SHIFT: TAILING ATTENDANT	2	3.14	3.80	60.80
2ND SHIFT: TAILING ATTENDANT (12¢ DIFF)	1	3.26	3.94	31.52
3RD SHIFT: TAILING ATTENDANT (16¢ DIFF)	1	3.30	3.99	31.92
SWING: ATTENDANT (8¢ AVG DIFF)	1	3.22	3.90	31.20
TOTALS	5			155.44

V. & S. FACTOR = 1.08

COST/MONTH: 155.44 × 5 × 4.33 × 1.08 = $ 3634.

(" " WITHOUT FACTOR = $ 3365.

NOTE: TAILING DISPOSAL OP. COSTS BASED ON NEWMONT'S MAN-POWER:

COST/DAY FOR 3 MEN = $92.32

COST/MONTH (WITHOUT V.&S. FACTOR) = 92.32 × 5 × 4.33 = $1999.

LABORERS: TOTAL.	4	3.05	3.69	118.08

V.& S. FACTOR = 1.08

COST/MONTH = 118.08 × 5 × 4.33 × 1.08 = $ 2761.

(" " WITHOUT FACTOR = $ 2556.)

RELIEF OPERATORS: (8¢ AVG. DIFF)	2	3.52	4.26	68.16

V.&S. FACTOR = 1.08

COST/MONTH = 68.16 × 5 × 4.33 × 1.08 = $ 1594.

(" " WITHOUT FACTOR = $ 1476

PARSONS-JURDEN CORPORATION - 26 Broadway, New York 4, N. Y.

COMPUTATIONS

JOB NO. 4832-01 SHEET NO. 7 OF 14

PLANT VEKOL HILLS MADE BY GATES DATE

SUBJECT OPERATING COST ESTIMATES CHECKED BY DATE

MAINTENANCE LABOR COSTS

	No. of Men	Hourly Rate: $ 1970	Hourly Rate: $ 1972	Cost/Shift $
DAY SHIFT:				
MECHANICS JOURNEYMEN	1	3.92	4.74	37.92
CLASS I	1	3.79	4.59	36.72
CLASS II	1	3.66	4.43	35.44
CLASS III	1	3.44	4.16	33.28
WELDER JOURNEYMAN	1	3.66	4.43	35.44
ELECTRIC "	1	3.92	4.74	37.92
OILER MECHANIC CLASS III	1	3.44	4.16	33.28
HELPER	1	3.18	3.85	30.80
CARPENTER	1	3.92	4.74	37.92
RUBBER REPAIRMAN	1	3.92	4.74	37.92
				356.64
2ND SHIFT:				
MECHANIC - CLASS I (12 ¢ DIFF)	1	3.91	4.73	37.84
CLASS II " "	1	3.78	4.57	36.56
CLASS III " "	1	3.56	4.31	34.48
ELECTRIC - CLASS I " "	1	4.04	4.89	39.12
HELPER	1	3.30	3.99	31.92
				179.92
3RD SHIFT:				
MECHANIC - CLASS I (16 ¢ DIFF)	1	3.95	4.78	38.24
CLASS II (16 ¢ DIFF)	1	3.82	4.62	36.96
ELECTRIC - CLASS I (16 ¢ DIFF)	1	4.08	4.94	39.52
HELPER	1	3.34	4.04	32.32
				147.04
SWING:				
MECHANIC - CLASS I (8 ¢ AVG DIFF)	1	3.87	4.68	37.44
ELECTRIC - " " (8 ¢ AVG DIFF)	1	4.00	4.84	38.72
HELPER (8 ¢ AVG. DIFF)	1	3.26	3.94	31.52
				107.68
TOTALS	22			791.28

VAC & SICK. FACTOR = 1.08

COST/MONTH: 791.28 x 5 x 4.33 x 1.08 = $18502.

(" " WITHOUT FACTOR = $ 17131.)

PARSONS-JURDEN CORPORATION - 26 Broadway, New York 4, N. Y.

COMPUTATIONS

JOB NO. 4832 - 01 SHEET NO. 8 OF 14

PLANT VEKOL HILLS MADE BY GATES DATE 2/12/71

SUBJECT OPERATING COST ESTIMATES CHECKED BY _____ DATE _____

MAINTENANCE AND OPERATING SUPPLIES

PRIMARY CRUSHING PLANT:

WEAR IRON FOR 7'ϕ STANDARD CRUSHERS.
AUG. 1970 PRICES - F.O.B. MILWAUKEE

BOWL	7260 LBS WT.	@	$ 2725.
LOWER MANTLE	5500 " "		2100
UPPER MANTLE	1250 " "		612
TOTAL	14010 LBS.		$ 5437
EST. FREIGHT TO ARIZ. @ $2.50/100 LBS :			350
			$ 5787

$\frac{5787}{14010}$ = $0.413 / LB IN 1970

PRICE ESCALATED TO 1972 AT 4%/YR = $0.447 / LB.

EST. METAL WEAR / TON ORE (INCL. SCRAP) = 0.04 LBS

COST FOR WEAR IRON = $0.0179 / TON ORE CRUSHED.

SECONDARY & TERTIARY CRUSHING PLANT:

WEAR IRON FOR 7'ϕ SHORTHEADS.
AUG. 1970 PRICES - FOB MILWAUKEE

BOWL	6700 LBS. WT.	@	$ 2250.
MANTLE	5200 " "		2100
TOTAL	11900 LBS.		$ 4350
EST. FRT. TO ARIZ. @ $ 2.50/100 LBS :			298
			$ 4648

$\frac{4648}{11900}$ = $0.391 / LB. 1970

PRICE ESCALATED TO 1972 AT 4%/YR = $0.423/LB

EST. METAL WEAR (INCL. SCRAP) = 0.08 LBS.

COST FOR WEAR IRON = $0.0338 / TON ORE CRUSHED

PARSONS-JURDEN CORPORATION - 26 Broadway, New York 4, N. Y.

COMPUTATIONS

JOB NO. 4832-01 SHEET NO. 9 OF 14

PLANT VEKOL HILLS MADE BY GATES DATE 2/12/71

SUBJECT OPERATING COST ESTIMATES. CHECKED BY _____ DATE _____

MAINTENANCE & OPERATING SUPPLIES.

PRIMARY GRINDING:

GRINDING BALL CONSUMPTION:

ESTIMATED AT 0.20 LBS/KWH OF GRINDING ENERGY.
GRINDING ENERGY AT 11.2 KWH/DST.
BALL CONSUMPTION = 2.24 LBS STEEL/DST ORE.

PRICE: $2\frac{1}{2}$"ϕ FORGED BALLS (MOLY-COP) DELIVERED IN TUCSON AREA: \$0.1278/LB (1970)
1972 PRICE AT 4%/YR = \$0.138/LB.

2.24 x 0.138 = \$0.309/TON ORE MILLED
x 600 000 = \$185,400/MONTH (1972)

MILL LINER CONSUMPTION:

ESTIMATED AT 0.02 LBS/KWH OF GRINDING ENERGY.
GRINDING ENERGY AT 11.2 KWH/DST
LINER STEEL CONSUMPTION = 11.2 x 0.02 = 0.224 LBS/TON ORE.

CHROM-MOLY LINERS: \$0.326/LB. (1970)
COST OF STEEL AT 70% WEAR = $\frac{0.326}{.7}$ = \$0.466/LB

0.466 x 0.224 = \$0.104/TON ORE MILLED (1970)
AT 4%/Y. ESCAL = \$0.112/TON ORE IN 1972

COST/MONTH IN 1972
0.112 x 600 000 = \$67200.

TOTAL COST/MONTH OF BALLS & LINERS: \$252,600.

PARSONS-JURDEN CORPORATION · 26 Broadway, New York 4, N. Y.

COMPUTATIONS

JOB NO. 4832-01 SHEET NO. 10 OF 14

PLANT VEKOL HILLS MADE BY GATES DATE 2/18/71

SUBJECT OPERATING COST ESTIMATES CHECKED BY _____ DATE _____

MAINTENANCE & OPERATING SUPPLIES.

CONCENTRATE REGRIND MILL:

GRINDING BALL CONSUMPTION:

GRINDING ENERGY / TON CONCT. =

10'ø x 13' BALL MILL POWERED BY 600HP MOTOR

ASSUMING 85% TO GRIND = 510 HP OR 380 KW

CONCENTRATE FEED RATE = 1608 TONS SOLIDS/DAY

÷ 24 = 67 DST/HR.

NET ENERGY INPUT TO GRIND: $\frac{380}{67}$ = 5.68 KWH/DST

STEEL CONSUMPTION ESTIMATED AT 0.2 LBS/KWH.

0.2 x 5.68 = 1.136 LBS / TON CONCTS.

$\frac{1608}{20.000}$ x 1.136 = 0.091 LBS STEEL / TON ORE MILLED.

PRICE OF 1"ø FORGED BALLS (MOLY-COP) TUCSON AREA

$13.63 / CWT = $0.1363 / LB. 1970

AT 4%/YR ESCAL. = $0.1474 / LB 1972

COST / TON ORE MILLED = 0.091 x 0.1474 = $0.0134 / TON ORE

COST / MONTH IN 1972:

600 000 x 0.0134 = $8040.

MILL LINER CONSUMPTION:

ESTIMATED AT 0.02 LBS/KWH OF GRINDING ENERGY

GRINDING ENERGY = 5.68 KWH/DST

LINER STEEL CONSUMPTION = 0.02 x 5.68 = 0.114 LBS/DST RO. CONCTS

$\frac{1608}{20\,000}$ x 0.114 = 0.0092 LBS/DST ORE.

CHROME-MOLY LINERS: $0.326/LB (1970)

COST OF STEEL AT 70% WEAR = $\frac{0.326}{.7}$ = $0.466/LB.

0.466 x 0.0092 = $0.004 / DST ORE

AT 4%/YR ESCAL. = $0.0043 / TON ORE IN 1972

COST / MONTH IN 1972 = 600,000 x 0.0043 = $2580

PARSONS-JURDEN CORPORATION - 26 Broadway, New York 4, N. Y.

COMPUTATIONS

JOB NO. 4832-01 SHEET NO. 11 OF 14

PLANT VEKOL HILLS MADE BY GATES DATE 2/18/71

SUBJECT OPERATING COST ESTIMATES CHECKED BY _____ DATE _____

MAINTENANCE AND OPERATING SUPPLIES.

FLOTATION REAGENTS:

	LBS/TON CONSUMED	$ PRICE/LB AT PLANTSITE 1970	1972	COST/TON ORE: $
AEROPROMOTOR No. 3302.	0.009	0.67	0.725	0.0065
AEROPROMOTOR No. 3501.	0.03	0.535	0.579	0.0174
SUPERFLOC No. 55	0.01	1.00	1.082	0 0108
DOWFROTH No. 250	0.025	0.315	0.341	0 0085
PINE OIL	0.025	0.17	0.184	0.0046
LIME - UNSLAKED	4.00	0.01	0.011	0.0440
TOTAL (1972)				0.0918
				0.092

COST/MONTH IN 1972

0.092 × 600 000 = $55200.

PARSONS-JURDEN CORPORATION · 26 Broadway, New York 4, N. Y.

COMPUTATIONS

JOB NO. 4832-01 SHEET NO. 12 OF 14

PLANT VEKOL HILLS MADE BY GATES DATE 2/16/71

SUBJECT OPERATING COST ESTIMATES CHECKED BY _____ DATE _____

MAINTENANCE & OPERATING SUPPLIES.

ROTARY DRYER: FUEL CONSUMPTION & COST

FILTER CAKE TO DRYER AT 86% SOLIDS (14% MOISTURE)

$\frac{2000}{.86} - 2000 = \underline{325.6 \text{ LBS}}$ WATER/TON CONC'T.

PRODUCT FROM DRYER AT 93% SOLIDS (7% MOISTURE)

$\frac{2000}{.93} - 2000 = \underline{150.5 \text{ LBS}}$ WATER/TON CONC'T. PROD.

WATER TO BE EVAPORATED: 325.6 - 150.5 = 175.1 LBS/TON.

BTU'S REQ'D./LB WATER ASSUMING ABOUT 50% UTILIZATION OF HEAT = 2200 BTU.

BTU'S. REQ'D./TON CONC'T = 175.1 × 2200 = 385,220 BTU.

No. 6 FUEL OIL: APPROX. 142000 BTU/GAL.

GALS. FUEL OIL REQ'D./TON CONC'T.

$\frac{385\,220}{142000} = \underline{2.71 \text{ GAL.}}$

COST OF No. 6. FUEL OIL IN ARIZONA = 10¢/GAL.
APPLIES TO NEW CONTRACTS WHEN FUEL IS AVAILABLE.

COST/TON ORE 1970:

$\frac{2.71 \times 0.10 \times 326.6}{20\,000} = \$0.0044$/TON ORE

COST PER MONTH IN 1972 AT 4%/YR ESCAL.

$\$0.0044 \times 1.04 \times 1.04 \times 600\,000 = \underline{\$2856}$

PARSONS-JURDEN CORPORATION · 26 Broadway, New York 4, N. Y.

COMPUTATIONS

JOB NO. 4832-01 SHEET NO. 13 OF 14

PLANT VEKOL HILLS MADE BY GATES DATE 2/19/71

SUBJECT OPERATING COST ESTIMATES COPPER CONCENTRATOR CHECKED BY _____ DATE _____

MATERIALS AND SUPPLIES FOR PLANT MAINTENANCE.

DIRECT CAPITAL COST OF PLANT = $21,000,000.

ANNUAL COST OF MATERIALS AND SUPPLIES ARE ESTIMATED AT 3% OF DIRECT CAPITAL COST.

$$21,000,000 \times 0.03 = \$630,000.$$

$$\text{COST/MONTH} = \frac{630,000}{12} = \$52\,500.$$

COST/TON OF ORE MILLED =

$$\frac{52\,500}{600,000} = \$0.0875$$

PARSONS-JURDEN CORPORATION · 26 Broadway, New York 4, N. Y.

COMPUTATIONS

JOB NO. 4832-01 SHEET NO. 14 OF 14

PLANT VEKOL HILLS MADE BY GATES DATE 3/3/71

SUBJECT OPERATING COST ESTIMATE CHECKED BY _____ DATE _____

ELECTRICAL ENERGY CONSUMPTION.

ENERGY COST: $0.00871 PER KWH

COPPER CONCENTRATOR AREA	KWH/TON ORE	ENERGY COST $/TON	$/MONTH
COARSE CRUSHING AND INTERMEDIATE STORAGE — AREAS 10 & 20.	0.477	0.0042	2520
FINE CRUSHING - AREA 30	1.754	0.0153	9180
GRINDING AND FINE ORE STORAGE - AREAS 40 & 50.	12.408	0.1081	64860
FLOTATION - AREA 60	1.776	0.0154	9240
THICKENING, FILTERING, AND DRYING - AREA 70.	0.390	0.0034	2040
TAILING DISPOSAL — AREAS 80 & 110	0.674	0.0058	3480
FLOTATION REAGENTS - AREA 90	0.180	0.0016	960
WATER SYSTEM - AREA 120	0.854	0.0074	4440
ASSAY OFFICE - SHOPS AND MISCELLANEOUS	0.168	0.0015	900
TOTALS	18.681	0.1627	97620

COMPUTATIONS
POWER COSTS

THE RALPH M. PARSONS COMPANY

TITLE COST OF POWER AT NEWMONT SUB SHEET NO. 1 OF 2

JOB NO. 4832-01 DEPARTMENT ELEC. AUTHOR JER DATE 3-1-71

REV.	CHECKER	DATE	REV.	CHECKER	DATE	REV.	CHECKER	DATE

ANNUAL POWER COSTS

FIXED COSTS

A.P.S. FACILITIES CHARGE

$509,700 × 0.186 × $\frac{1.00}{1.0+2.25}$ $29,100

P.T.U.A. FACILITIES O.&M.

$850,000 × 0.015 12,750

P.T.U.A. INSURANCE

$11,000 × $\frac{1.00}{1.00+2.25}$ 3,380

DEMAND CHARGES

ANNUAL CHARGE = $2.915/MO. × 12 × LOSS 1.01 + $\frac{\text{OPER. EXP. } 100,000}{22,500\ (1.0+2.25)}$

= $36.70 PER YR PER KW

22,500 × $36.70 ..... $826,000

ENERGY CHARGES

1ST BLOCK

(3.00 BASE + 0.234 FUEL ADJ) × 1.0075 LOSS FACTOR

= 3.258 MILLS/KWH

12 × 250 × 22500 = 67,500,000 KWH

67,500,000 × $0.003258 220,000

2ND BLOCK

(2.40 BASE + 0.234 FUEL ADJ) × 1.0075 LOSS FACTOR

= 2.654 MILLS/KWH

150,000,000 − 67,500,000 = 82,500,000 KWH

82,500,000 × $0.002654 219,000

TOTAL - ANNUAL POWER COST $1,310,230

UNIT POWER COST

$\frac{\$1,310,230}{150,000,000}$ = $0.00871 ..... 8.71 MILLS/KWH

THE RALPH M. PARSONS COMPANY

TITLE COST OF POWER AT NEWMONT SUB SHEET NO. 2 OF 2

JOB NO. 4832 DEPARTMENT ELEC AUTHOR JRR DATE 3-1-71

REV.	CHECKER	DATE	REV.	CHECKER	DATE	REV.	CHECKER	DATE

CALCULATIONS ON SHEET 1 BASED ON THE FOLLOWING

PEAK LOAD AT NEWMONT	=	22,500 KW
ANNUAL CONSUMPTION	=	150,000,000 KWH
COST APPORTIONMENT NEWMONT TO HECLA		1.00 : 2.25
COST OF A.P.S. FACILITIES	=	$509,700
NEWMONT SHARE OF P.T.U.A. FACILITIES	=	$850,000
A.P.S. FACILITIES CHARGE	=	0.186 PER YR
OPERATING & MAINT COST OF P.T.U.A. FACIL.	=	0.015 PER YR
A.P.S. INCOME TAX	=	50.109 %
AD VALORUM TAX (A.P.S. FACILITIES	=	$4.55 PER KW
FUEL ADJUSTMENT	=	$0.000234 PER KWH
BASE DEMAND CHARGE A.P.S.	=	$2.915 PER KW
BASE ENERGY CHARGE P.T.U.A.		
1ST BLOCK 250HRS USE	=	3.0 MILLS PER KWH
2ND BLOCK -	=	2.4 MILLS PER KWH
PEAK LOAD LOSSES	=	1.0%
AV. ENERGY LOSSES	=	0.75%

PRINTED IN U.S.A.

COMPUTATIONS
MOLY PLANT
OPERATING COST ESTIMATE

PARSONS-JURDEN CORPORATION - 26 Broadway, New York 4, N. Y.

COMPUTATIONS

JOB NO. 4832-01 SHEET NO. 1 OF 7

PLANT YEKOL HILLS MOLY PLANT MADE BY R. BRISON DATE 2/23/71

SUBJECT OPERATING COST ESTIMATE CHECKED BY _____ DATE _____

MOLY PLANT SUMMARY

	1972 COST, $		
	PER MONTH	PER DST MOLY PLANT FEED	PER DST MILLED
OPERATING LABOR (14 MEN)	10,702	1.081	0.0178
MAINTENANCE LABOR (3 MEN)	2,357	0.238	0.0039
ASSAYING (2 MEN)	1,625	0.164	0.0027
SUPERVISION @ 25% OF ABOVE	3,671	0.371	0.0061
TOTAL LABOR & SUPERV.	18,355	1.854	0.0305
GRINDING BALLS & LINERS	831	0.084	0.0014
FLOTATION REAGENTS	18,263	1.845	0.0304
MAINTENANCE SUPPLIES	1,750	0.177	0.0029
ELECTRICAL ENERGY	1,793	0.181	0.0030
TOTAL	40,992	4.141	0.0682

PARSONS-JURDEN CORPORATION · 26 Broadway, New York 4, N. Y.

COMPUTATIONS

JOB NO. 4832-01 SHEET NO. 2 OF 7

PLANT VEKOL HILLS MOLY PLANT MADE BY R. BRISON DATE 2/23/71

SUBJECT OPERATING COST ESTIMATE CHECKED BY _____ DATE _____

OPERATING LABOR

	No. of Men	Hourly Rate, $ 1970	Hourly Rate, $ 1972	Cost/Shift $ 1972
OPERATORS				
DAY SHIFT	1	3.54	4.28	34.24
2ND SHIFT (12¢ DIFF)	1	3.66	4.43	35.44
3RD SHIFT (16¢ DIFF)	1	3.70	4.48	35.84
SWING (8¢ DIFF)	1	3.62	4.38	35.04
TOTALS	4			140.56

VAC. & SICK. FACTOR = 1.08 (SEE COPPER CONC. OP. COST EST.)

COST / MONTH = 140.56 X 5 X 4.33 X 1.08 = $3287

(" " WITHOUT 1.08 FACTOR = $3043)

OPERATOR HELPERS				
DAY SHIFT	1	3.18	3.85	30.80
2ND SHIFT (12¢ DIFF.)	1	3.30	3.99	31.92
3RD SHIFT (16¢ DIFF)	1	3.34	4.04	32.32
SWING (8¢ DIFF)	1	3.26	3.94	31.52
TOTALS	4			126.56

V. & S. FACTOR = 1.08

COST / MONTH = 126.56 X 5 X 4.33 X 1.08 = $2959

(" " WITHOUT 1.08 FACTOR = $2740)

PARSONS-JURDEN CORPORATION - 26 Broadway, New York 4, N. Y.

COMPUTATIONS

JOB NO. 4832-01 SHEET NO. 3 OF 7

PLANT VEKOL HILLS MOLY PLANT MADE BY R. BRISON DATE 2/23/71

SUBJECT OPERATING COST ESTIMATE CHECKED BY _____ DATE _____

OPERATING LABOR, CONT'D

	No. of Men	Hourly Rate, $ 1970	Hourly Rate, $ 1972	Cost/Shift $ 1972
REAGENT HANDLING				
DAY SHIFT: OPERATOR	1	3.44	4.16	33.28
DAY SHIFT: HELPER	2	3.18	3.85	61.60
DAY SHIFT: RELIEF OP./HELPER	1	3.31	4.01	32.08
TOTALS	4			126.96

V. & S. FACTOR = 1.08

COST/MONTH = 126.96 X 5 X 4.33 X 1.08 = $2969

(" " WITHOUT 1.08 FACTOR = $2749)

LABORERS				
TOTAL	1	3.05	3.69	29.52

V. & S. FACTOR = 1.08

COST/MONTH = 29.52 X 5 X 4.33 X 1.08 = $690

(" " WITHOUT 1.08 FACTOR = $639)

RELIEF OPERATORS				
TOTAL	1	3.52	4.26	34.08

V. & S. FACTOR = 1.08

COST/MONTH = 34.08 X 5 X 4.33 X 1.08 = $797

(" " WITHOUT 1.08 FACTOR = $738)

TOTAL OPERATING LABOR 14 MEN

COST/MONTH = $10,702

PARSONS-JURDEN CORPORATION - 26 Broadway, New York 4, N. Y.

COMPUTATIONS

JOB NO. 4832-01 SHEET NO. 4 OF 7

PLANT VEKOL HILLS MOLY PLANT MADE BY R. BRISON DATE 2/23/71

SUBJECT OPERATING COST ESTIMATE CHECKED BY _____ DATE _____

MAINTENANCE LABOR

	No. of MEN	Hourly Rate, $ 1970	Hourly Rate, $ 1972	Cost/Shift $ 1972
MECHANIC CLASS I	1	3.79	4.59	36.72
MECHANIC CLASS III	1	3.44	4.16	33.28
HELPER	1	3.18	3.85	30.80
TOTALS	3			100.80

NOTE: CONCENTRATOR AND MOLY PLANT WILL USE SAME MAINTENANCE CREW. ABOVE IS ESTIMATED ADDITION REQ'D TO CONC. MAINTENCE TO HANDLE MOLY PLANT.

V. & S. FACTOR = 1.08

COST/MONTH = 100.80 X 5 X 4.33 X 1.08 = $2357

(" " WITHOUT 1.08 FACTOR = $2182)

PARSONS-JURDEN CORPORATION · 26 Broadway, New York 4, N. Y.

COMPUTATIONS

JOB NO. 4832-01 SHEET NO. 5 OF 7

PLANT YEKOL HILLS MOLY PLANT MADE BY R. BRISON DATE 2/23/7

SUBJECT OPERATING COST ESTIMATE CHECKED BY _____ DATE _____

MAINTENANCE & OPERATING SUPPLIES

GRINDING BALL CONSUMPTION

ESTIMATED AT 0.20 LBS/KWH

GRINDING ENERGY = 40 X 0.746 = 29.8 KW

BALL CONSUMPTION = 29.8 X 0.2 X 24 X 30

= 4290 LBS./MONTH

ESTIMATED COST, 1972, = $0.147/LB

(1" MOLYCOP) (SEE COPPER CONC. EST. P. 9)

ESTIMATED COST/MONTH, 1972 = 4290 X 0.147

= $631

MILL LINER CONSUMPTION

ESTIMATE @ 0.1 X BALL CONSUMPTION

EST. COST/MONTH, 1972 = 4290 X 0.1 X $0.466

= $200

TOTAL COST/MONTH FOR BALLS & LINERS = $831

COST/TON OF COPPER CONC. FEED =

$831 ÷ 600,000 = $0.0014

PARSONS-JURDEN CORPORATION - 26 Broadway, New York 4, N. Y.

COMPUTATIONS

JOB NO. 4832-01 SHEET NO. 6 OF 7

PLANT VEKOL HILLS MOLY PLANT MADE BY R. BRISON DATE 2/23/71

SUBJECT OPERATING COST ESTIMATE CHECKED BY _____ DATE _____

MAINTENANCE & OPERATING SUPPLIES (CONT'D)

FLOTATION REAGENTS

	LBS./TON OF MOLY PLANT FEED	PRICE, $/LB AT PLANT SITE 1970	PRICE, $/LB AT PLANT SITE 1972	1972 COST/TON OF MOLY PLANT FEED, $
SODIUM CYANIDE	3.39	0.19	0.2052	0.6956
ZINC OXIDE	0.09	0.20	0.2160	0.0194
HYDROGEN PEROXIDE 50%	1.44	0.1664	0.1797	0.2588
SULPHURIC ACID	2.1	0.0189	0.0204	0.0428
SODIUM FERROCYANIDE	2.59	0.19	0.2052	0.5315
POTASSIUM FERRICYANIDE	0.31	0.5183	0.5598	0.1735
SODIUM HYDROXIDE	0.89	0.0712	0.0769	0.0684
LIQUID CHLORINE	0.79	0.0525	0.0567	0.0448
FUEL OIL	0.45	0.0205	0.0221	0.0099
TOTAL (1972)				1.8447

COST/TON COPPER CONCENTRATOR FEED (1972)

$$= 1.8447 \times \frac{330}{20,000} = \$0.0304$$

COST/MONTH (1972) = 1.8447 X 330 X 30 = $18,263

PARSONS-JURDEN CORPORATION · 26 Broadway, New York 4, N. Y.

COMPUTATIONS

JOB NO. 4832-01 SHEET NO. 7 OF 7

PLANT VEKOL HILLS MOLY PLANT MADE BY R. BRISON DATE 2/23/71

SUBJECT OPERATING COST ESTIMATE CHECKED BY _____ DATE _____

ELECTRICAL ENERGY

TOTAL MOTOR H.P. = 290 H.P.
ELEC. HEAT FOR DRYER = 70 KW

TOTAL ELEC. ENERGY REQ'D =
(290 X 0.746) + 70 = 286 KW
COST/MONTH (1972)
= 286 X 24 X 30 X $0.00871 = $1793

MATERIALS & SUPPLIES FOR PLANT MAINTENANCE

ESTIMATE AT 3% OF DIRECT CAPITAL COST

3/100 X $700,000 = $21,000/YR
= $1750/MO

COMPUTATIONS
COPPER CONCENTRATOR
BACK-UP DATA

PARSONS-JURDEN CORPORATION · 26 Broadway, New York 4, N. Y.

COMPUTATIONS

JOB NO. 4832-01 SHEET NO. 1 OF 9

PLANT KERR HILLS MADE BY RCG DATE 12/23/70

SUBJECT MET. BALANCE CHECKED BY ____ DATE ____

	WEIGHT DST/D	ASSAYS %Cu	ASSAYS %Mo	METAL CONTENT TONS/DAY Cu	METAL CONTENT TONS/DAY Mo	DISTRIBUTION %Cu	DISTRIBUTION %Mo
NEWMONT ESTIMATE							
HEADS	20,000.00	0.543	0.014	108.60	2.80	100.00	100.00
Cu-Mo CONC.	329.68	28.00	0.679	92.31	2.24	85.00	80.00
TAILS	19,670.32	0.083	0.0028	16.29	0.56	15.00	20.00
Mo CONC	3.11	0.85	54.0	0.03	1.68	0.02	60.00
Final Cu CONC	326.57	28.26	0.172	92.28	0.56	84.98	20.00
P-J ESTIMATE (FOR INFO. ONLY)							
HEADS	20,000.00	0.543	0.014	108.60	2.80	100.00	100.00
Cu-Mo CONC	329.68	28.00	0.637	92.31	2.10	85.00	75.00
TAILS	19,670.32	0.083	0.0036	16.29	0.70	15.00	25.00
Mo CONC	2.33	0.85	54.0	0.02	1.26	0.02	45.00
Final Cu CONC	327.35	28.19	0.257	92.29	0.84	84.98	30.00

PARSONS-JURDEN CORPORATION - 26 Broadway, New York 4, N. Y.

COMPUTATIONS

JOB NO. 4832-01 | SHEET NO. 2 OF 19

PLANT VEKOL HILLS | MADE BY GATES DATE

SUBJECT FLOWSHEET - MATERIAL BAL. | CHECKED BY DATE

ONE OF FOUR PARALLEL GRINDING CIRCUITS.

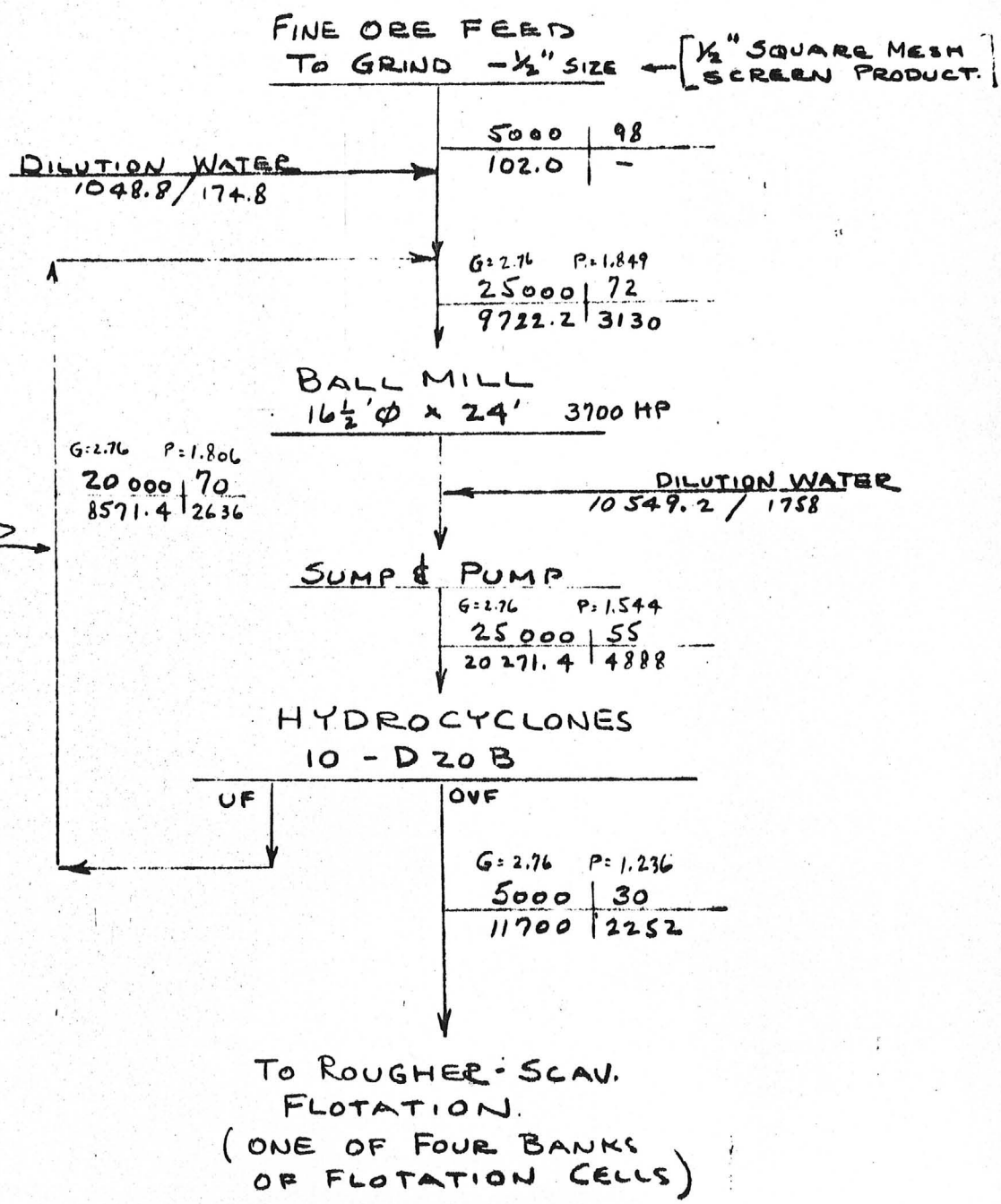

G = Sp. Gr. SOLIDS P = PULP DENSITY

SOLIDS DST/D	%WT SOLIDS IN PULP
WATER TONS/DAY	USGPM PULP FLOW RATE

DORR-OLIVER TEST WORK INDICATES ENERGY REQUIREMENTS TO GRIND - 11.2 KWH/DST ORE BASED UPON CONVENTIONAL ROD MILL-BALL MILL CIRCUIT. F = 80% -8800 μ (NOMINAL 100% - ½") *
P = 80% - 116 μ
W_i = 13.4

CORRECTION FACTORS & ENERGY REQUIREMENTS FOR LARGE BALL MILL - SINGLE STAGE PRIMARY GRIND.

CORRECTION FOR OVERSIZE FEED.

$$F_1 = \frac{R_r + (W_i - 7)\dfrac{F - F_o}{F_o}}{R_r}$$

$$R_r = \frac{8800}{116} = 75.8621 \; ; \quad F_o = 4000\sqrt{13/W_i} = 3939.8$$

$$F_1 = \frac{75.8621 + (13.4 - 7)\dfrac{8800 - 3939.8}{3939.8}}{75.8621} = \underline{1.104}$$

CORRECTION FACTOR FOR LARGE MILL DIAM.

MAX. EFFIC. AT 13' DIAM.

$$F_2 = (8/D)^{0.2} = (8/13)^{0.2} = \underline{0.9074}$$

TOTAL CORRECTION

$F_1 \times F_2 = 1.002$ NO CORRECTION REQ'D.

* NOTE: MILL FEED OF 80% MINUS 8800 μ IS BASED UPON ½" SQUARE MESH SCREENS. MILL SIZE AND POWER MUST BE INCREASED IF ½" SLOTTED SCREENS ARE USED.

PARSONS-JURDEN CORPORATION - 26 Broadway, New York 4, N. Y.

COMPUTATIONS

JOB NO. 4832-01 SHEET NO. 4 OF 19

PLANT VEKOL HILLS MADE BY GATES 1/8/71 DATE

SUBJECT PRIMARY BALL MILL SIZE CHECKED BY DATE

CALCULATION CHECK.

BALL MILL DIMENSIONS: 16'-6" ID SHELL x 24' LONG
ASSUME LINERS ARE 1½" THICK AFTER WEAR.

CAVITY DIMENSIONS: 16.25' ø x 24'.

DIAM. FACTOR: 189.0
WET OVERFLOW FACTOR AT 42% BALL LOAD = 5.08
CRITICAL SPEED FACTOR: (@ 68% C.S.) = 0.1583
LENGTH = 24.0

HP REQ'D. = 189 x 5.08 x 0.1583 x 24
= 3648 H.P. (3700 HP MOTOR)

IF 85% OF TOTAL POWER IS AVAIL. TO GRIND:
3700 x .85 = 3145 HP NET TO GRIND.

NET ENERGY CONSUMED TO GRIND FROM 8800μ to 116μ PARTICLE SIZE: 11.2 KWH/DST.

NET POWER TO GRIND: $\frac{11.2 \times 1.34 \times 5000}{24}$ = 3127 HP

PARSONS-JURDEN CORPORATION - 26 Broadway, New York 4, N. Y.

COMPUTATIONS

JOB NO. 4832-01 SHEET NO. 5 OF 19

PLANT VEKOL HILLS MADE BY GATES DATE 1/14/71

SUBJECT PRIMARY GRINDING CHECKED BY _____ DATE _____

MAXIMUM BALL SIZE:

$$M = \sqrt{\frac{F W_i}{200 \times C_S}} \sqrt{\frac{S}{\sqrt{D}}}$$

$F = 8800\ \mu$

$W_i = 11.2$

$C_S = 68$

$S = 2.8$

$D = 16.25$

$$M = \sqrt{\frac{8800 \times 11.2}{200 \times 68}} \sqrt{\frac{2.8}{\sqrt{16.25}}} = 2.46''$$ SAY $2\frac{1}{2}''\phi$ BALLS

WEIGHT OF BALL CHARGE: ONE MILL

MILL CAVITY DIAM: 16.25'
(RADIUS: 8.125')

MILL LOAD: 42%

LENGTH: 24'

WT. OF BALLS: ± 280 LBS/CU. FT.

VOL. = $1.31 \times 8.125^2 \times 24 = 2075$ CU FT.

TOTAL WT. = $2075 \times 280 = 581,000$ LBS FOR 42% BALL CHARGE

PARSONS-JURDEN CORPORATION - 26 Broadway, New York 4, N. Y.

COMPUTATIONS

JOB NO. 4832-01 | SHEET NO. 6 OF 19

PLANT VEKOL HILLS | MADE BY GATES DATE 1/4/71

SUBJECT FLOWSHEET - MATERIAL BAL. | CHECKED BY _____ DATE _____

ONE OF FOUR PARALLEL RGHR.-SCAV. FLOT. CIRCUITS

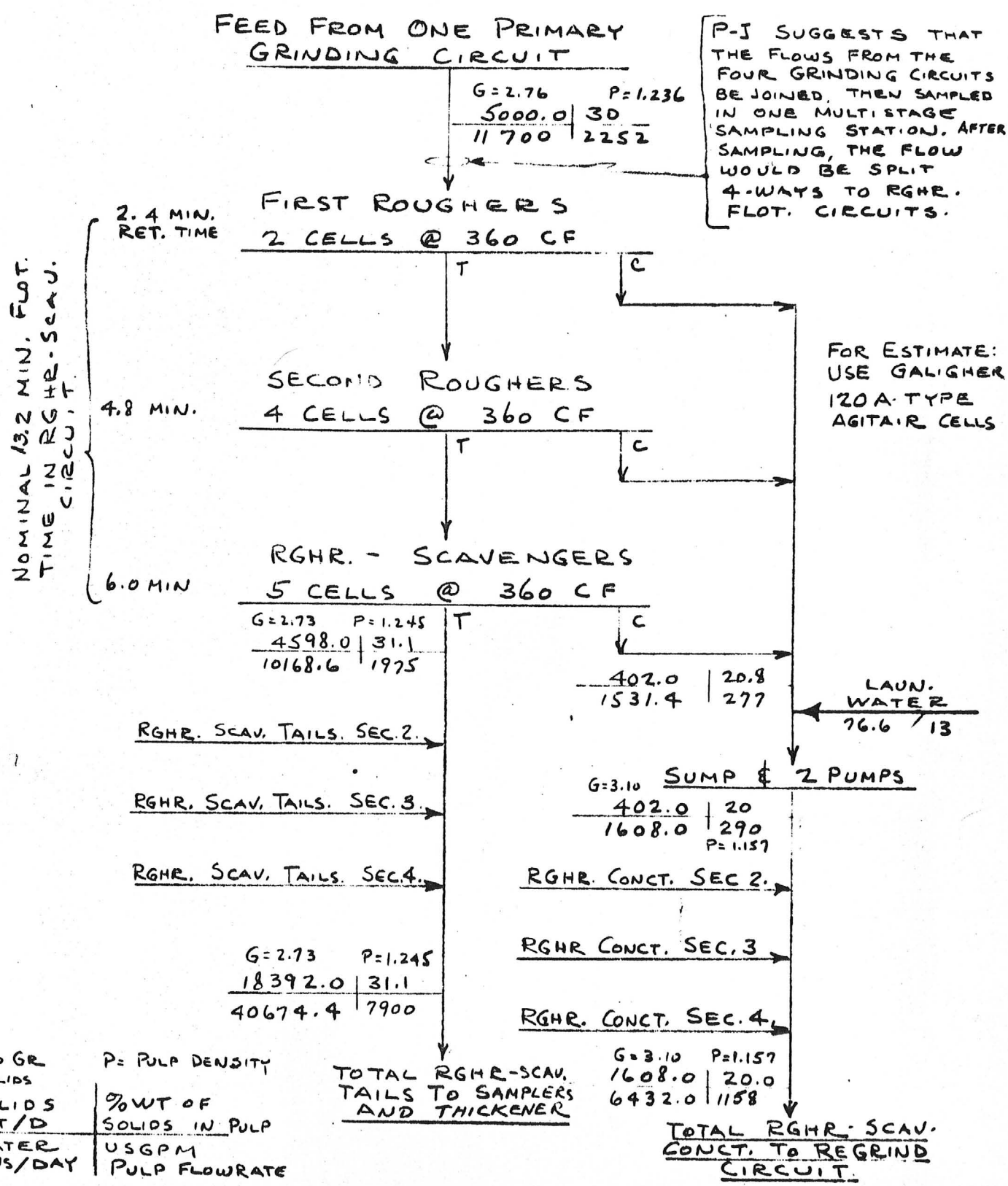

G = Sp Gr Solids | P = Pulp Density

Solids DST/D | % WT of Solids in Pulp

Water Tons/Day | USGPM Pulp Flowrate

PARSONS-JURDEN CORPORATION - 26 Broadway, New York 4, N. Y.

COMPUTATIONS

JOB NO. 4832-01 | SHEET NO. 7 OF 19

PLANT VEKOL HILLS | MADE BY GATES DATE 1/5/71

SUBJECT FLOWSHEET - MATERIAL BALANCE | CHECKED BY _____ DATE _____

REGRIND & CLEANER CIRCUITS TO PROCESS ROUGHER & SCAVENGER CONC'T.

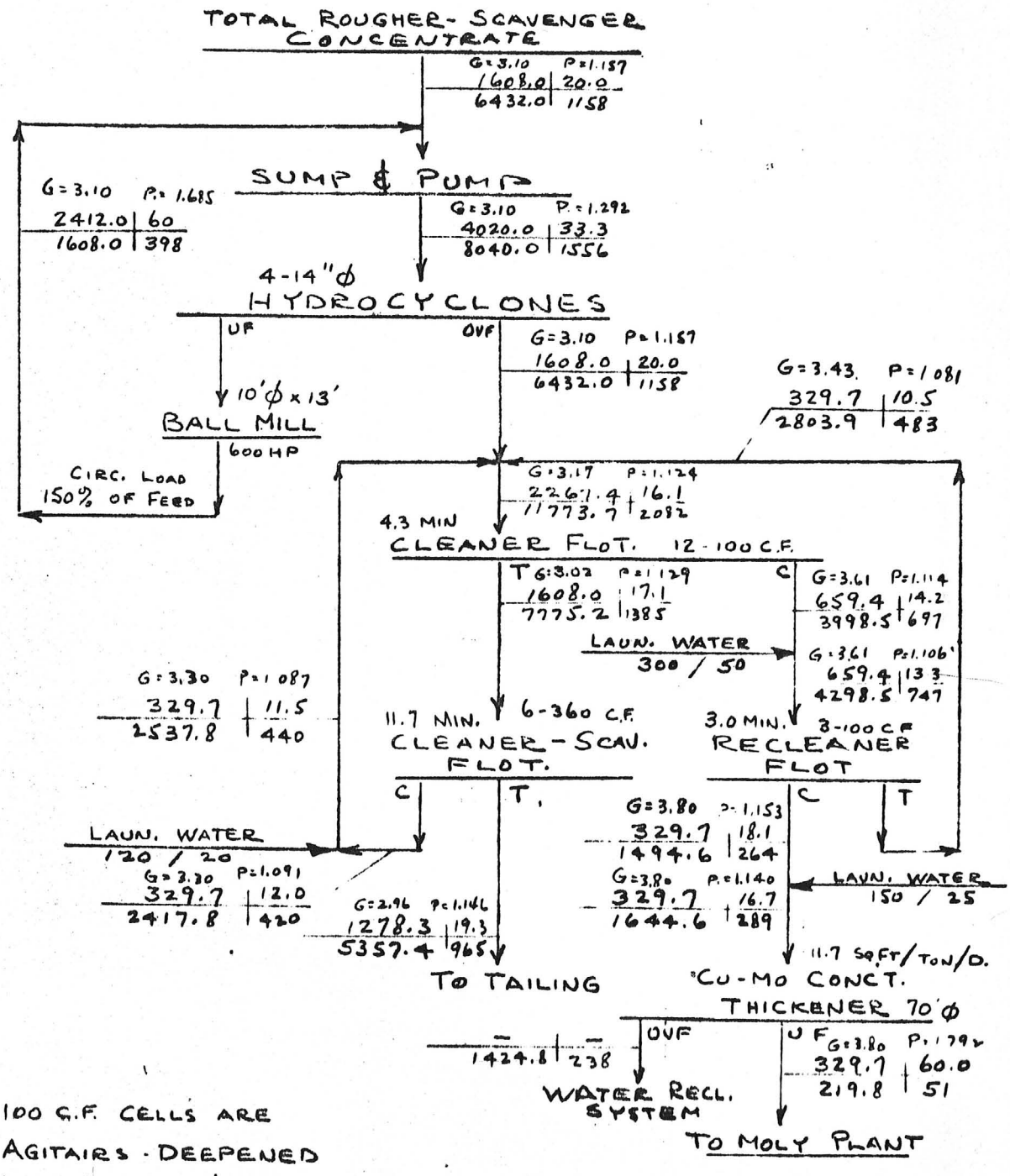

NOTE: 100 C.F. CELLS ARE No. 60 AGITAIRS - DEEPENED TO PROVIDE 100 C.F. VOLUME.

360 C.F. CELLS ARE AGITAIR, No. 120 A.

PARSONS-JURDEN CORPORATION - 26 Broadway, New York 4, N. Y.

COMPUTATIONS

JOB NO. 4832-01 SHEET NO. 8 OF 19

PLANT VEKOL HILLS MADE BY GATES DATE

SUBJECT RE GRIND MILL CHECKED BY DATE

COMPUTATIONS:

MILL DIMENSIONS: 10' I.D. SHELL x 13' LONG.

ASSUME: PARTLY WORN LINERS @ 1½"

CAVITY DIMENSIONS: 9'-9" x 13'

DIAM. FACTOR =	53.0
42% BALL LOAD	5.08
68% CRITICAL SPEED	0.1583
LENGTH	13.0

HP = 53 x 5.08 x 0.1583 x 13 = 554

ASSUME 600 HP DRIVE @ 85% NET PWR. TO GRIND = 510 HP x 0.746 = 380.5 KW.

FEED TO B.M. CLASS. CIRCUIT = 1608 TONS SOLIDS/D. ÷ 24 = 67 DST/HR

NET ENERGY INPUT TO GRIND:

$$\frac{380.5}{67} = \underline{\underline{5.68 \text{ KWH/DST}}}.$$

(FROM PLANT DESIGN DATA: PILOT PLANT REP'T pg 53 - 4.53 KWH/DST REQUIRED TO REDUCE SOLIDS FROM 55% MINUS 325M TO 90% MINUS 325M)

PARSONS-JURDEN CORPORATION - 26 Broadway, New York 4, N. Y.

COMPUTATIONS

JOB NO. 4832-01 SHEET NO. 9 OF 19

PLANT VEKOL HILLS MADE BY GATES DATE

SUBJECT COPPER CLEANER CIRCUITS CHECKED BY DATE

COMPUTATIONS:

CLEANER FLOTATION 12 - 100 CF CELLS

TOTAL CELL VOLUME = 1200 Cu. FT

FLOWRATE TO CLNR. CELLS = 2082 GPM

÷ 7.48 = 278.3 C.F.M

RETENTION TIME = $\frac{1200}{278.3}$ = 4.3 MIN.

CLEANER-SCAVENGER FLOT: 6 - 360 C.F. CELLS

TOTAL CELL VOLUME = 2160 C.F.

FLOWRATE TO SCAV. CELLS = 1385 GPM

÷ 7.48 = 185.2 CFM

RETENTION TIME = $\frac{2160}{185.2}$ = 11.7 MIN.

RECLEANER FLOTATION: 3 - 100 CF CELLS.

TOTAL CELL VOLUME = 300 CF

FLOWRATE TO RECLEANER FLOT. = 747 GPM

÷ 7.48 = 99.9 CFM

RETENTION TIME: $\frac{300}{99.9}$ = 3.0 MIN.

COPPER-MOLY CONCENTRATE TKR.

FEED RATE: 329.7 TONS SOLIDS/DAY

TKR. AREA: 35 x 35 x 3.14 = 3848 SQ. FT.

÷ 329.7 = 11.7 SQ. FT./TON SOLIDS/DAY.

PARSONS-JURDEN CORPORATION - 26 Broadway, New York 4, N. Y.

COMPUTATIONS

JOB NO. 4832-01 | SHEET NO. 10 OF 19

PLANT VEKOL HILLS | MADE BY GATES DATE 1/6/71

SUBJECT FLOWSHEET - MATERIAL BALANCE | CHECKED BY _____ DATE _____

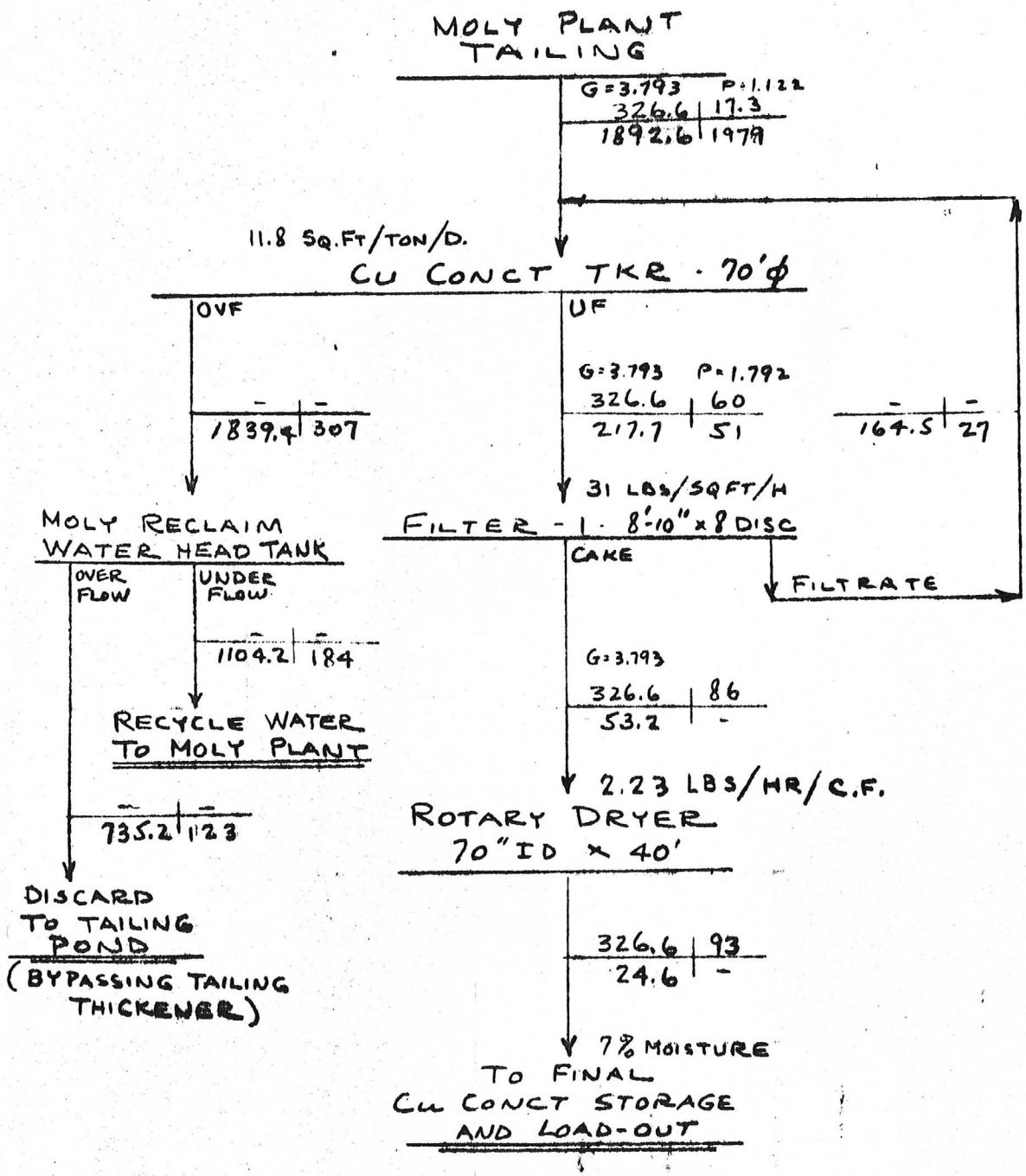

NOTE. A SMALLER FILTER, SAY 8'-10" x 6 DISC, OR UP TO 50 LBS/SQ.FT/HR COULD BE USED. ABOVE.

PARSONS-JURDEN CORPORATION · 26 Broadway, New York 4, N. Y.

COMPUTATIONS

JOB NO. 4832-01 SHEET NO. 11 OF 19

PLANT VEKOL HILLS MADE BY GATES DATE 1/6/71

SUBJECT COPPER CONC'T. DEWATERING & DRYING AND TAILING THICKENER. CHECKED BY _____ DATE _____

EQUIP. SIZE - CHECK CALCULATIONS.

COPPER CONCT. TKR. AT 70' DIAM.

FEED RATE: 326.6 TONS SOLIDS/D.

TKR. AREA: 35 x 35 x 3.14 = 3848 SQ.FT.

÷ 326.6 = 11.8 SQ.FT./TON/DAY

FILTER: ONE 8'-10" x 8 DISC.

110 SQ FT./DISC x 8 = 880 SQ. FT.

$\frac{326.6 \times 2000}{24}$ = 27,217 LBS SOLIDS/HR

÷ 880 = 31 LBS/SQ FT/HR.

ROTARY DRYER - 70" ID x 40'

WATER CONTENT OF FEED = 53.2 TONS/DAY

" " " PROD. = 24.6 " "

WATER TO BE EVAPORATED 28.6 TONS/DAY

x $\frac{2000}{24}$ = 2383 LBS/HR.

VOL. OF DRYER = $\left(\frac{35}{12}\right)^2 \times \pi \times 40$ = 1069 CU FT.

$\frac{2383}{1069}$ = 2.23 LBS/CU.FT./HR.

TAILING THICKENERS - 2 @ 350'ϕ

FEED RATE = 19670.3 TONS SOLIDS/DAY

TOTAL AREA OF 2 TKRS: $175^2 \times \pi \times 2$ = 192423 SQ FT.

÷ 19670.3 = 9.78 SQ. FT./TON/DAY

PARSONS-JURDEN CORPORATION - 26 Broadway, New York 4, N. Y.

COMPUTATIONS

JOB NO. 4832-01 SHEET NO. 12 OF 19

PLANT VEKOL HILLS MADE BY GATES DATE 1/7/71

SUBJECT FLOWSHEET - MATERIAL BALANCE CHECKED BY _____ DATE _____

TAILING DISPOSAL & MILL WATER RECLAIM.

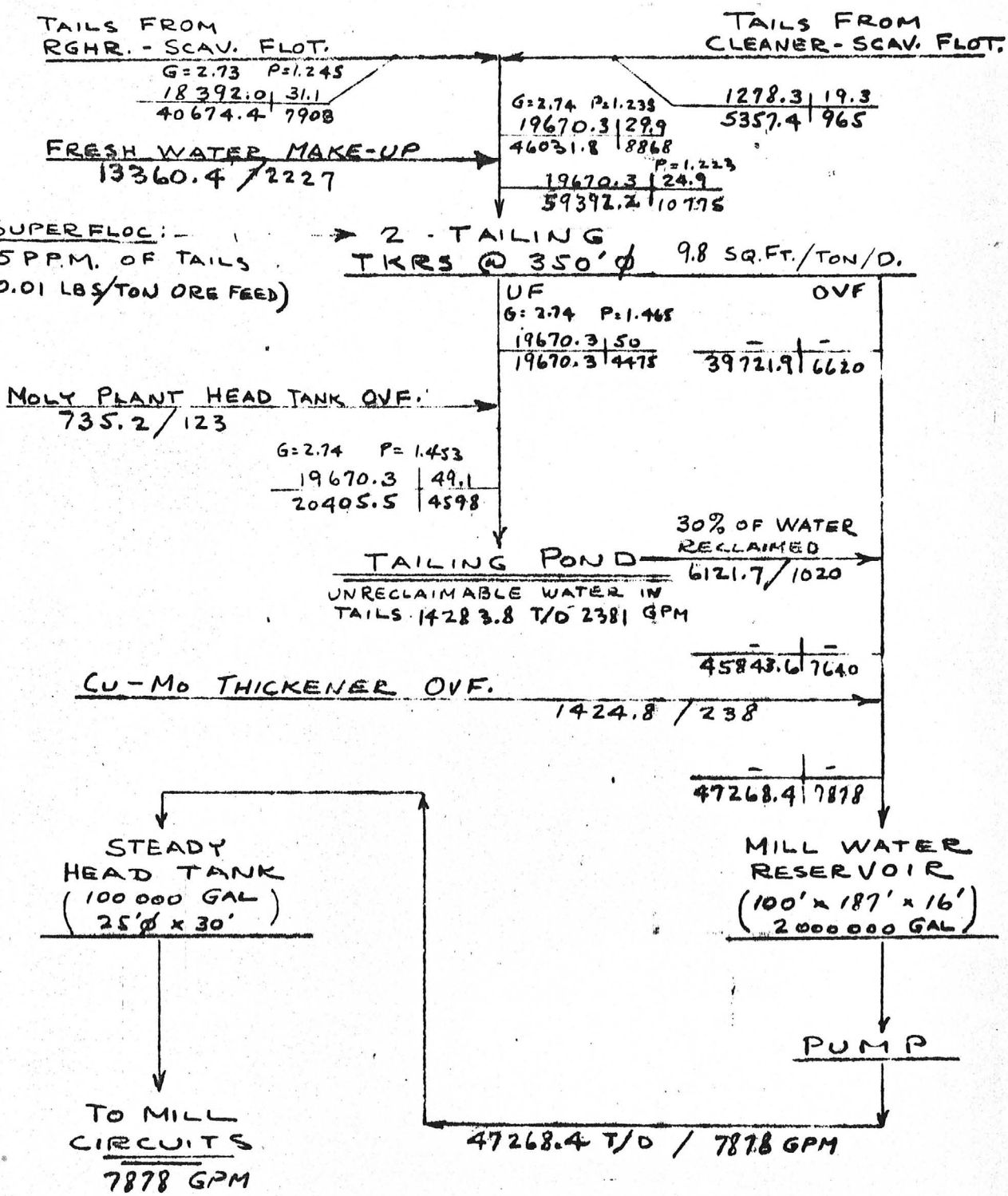

PARSONS-JURDEN CORPORATION · 26 Broadway, New York 4, N. Y.

COMPUTATIONS

JOB NO. 4832-01 SHEET NO. 13 OF 19

PLANT VEKOL HILLS MADE BY GATES DATE 2/1/71

SUBJECT PROCESS WATER BALANCE CHECKED BY _____ DATE _____

NET PROCESS WATER BALANCE FOR TOTAL PLANT.

	WATER IN T/D	WATER IN GPM	WATER OUT T/D	WATER OUT GPM
MOISTURE CONTENT OF ORE AT 2% H_2O	408.0			
FRESH WATER MAKE-UP:				
TO TAILING TKR: 13360.4 T/D				
TO MOLY PLANT: 569.3 "				
TOTAL	13929.7	2322		
COPPER CONC'T. FILTER CAKE			53.2	
MOLY CONC'T. DRYER			0.7	
UNRECLAIMABLE WATER IN TAILING POND INCL EVAPORATION.			14283.8	2381
	14337.7		14337.7	

NOTE:

PROCESS WATER DOES NOT INCLUDE SPILLAGE, COOLING WATER, IN PLANT EVAP., POTABLE WATER.

PARSONS-JURDEN CORPORATION - 26 Broadway, New York 4, N. Y.

COMPUTATIONS

JOB NO. 4832-01 SHEET NO. 14 OF 19

PLANT VEKOL HILLS MADE BY GATES DATE 1/7/71

SUBJECT PROCESS WATER DISTRIBUTION CHECKED BY _____ DATE _____

DISTRIBUTION OF PROCESS WATER SUPPLIED BY THE STEADY HEAD TANK FOR COPPER CIRCUITS.

	WATER FLOWRATE	
	TONS/DAY	GPM
DILUTION WATER AT BALL MILL FEED	4195.2	699
DILUTION AND PUMP SEAL WATER TO HYDROCYCLONE SUMPS & PUMPS	42196.8	7033
ROUGHER & SCAV. FLOT. CONC'T. LAUNDER & PUMP SEAL WATER	306.4	51
Cu CLEANER FLOT. LAUNDER WATER	300.0	50
Cu RE-CLEANER " " "	150.0	25
CLEANER-SCAV. " " "	120.0	20
TOTAL WATER TO STEADY HEAD TANK.	47268.4	7878

PARSONS-JURDEN CORPORATION · 26 Broadway, New York 4, N. Y.

COMPUTATIONS

JOB NO. 4832-01 SHEET NO. 15 OF 19

PLANT VEKOL HILLS MADE BY GATES DATE 1/8/71

SUBJECT LIME REAGENT PREPARATION CHECKED BY _____ DATE _____

FLOWSHEET & MATERIAL BALANCE

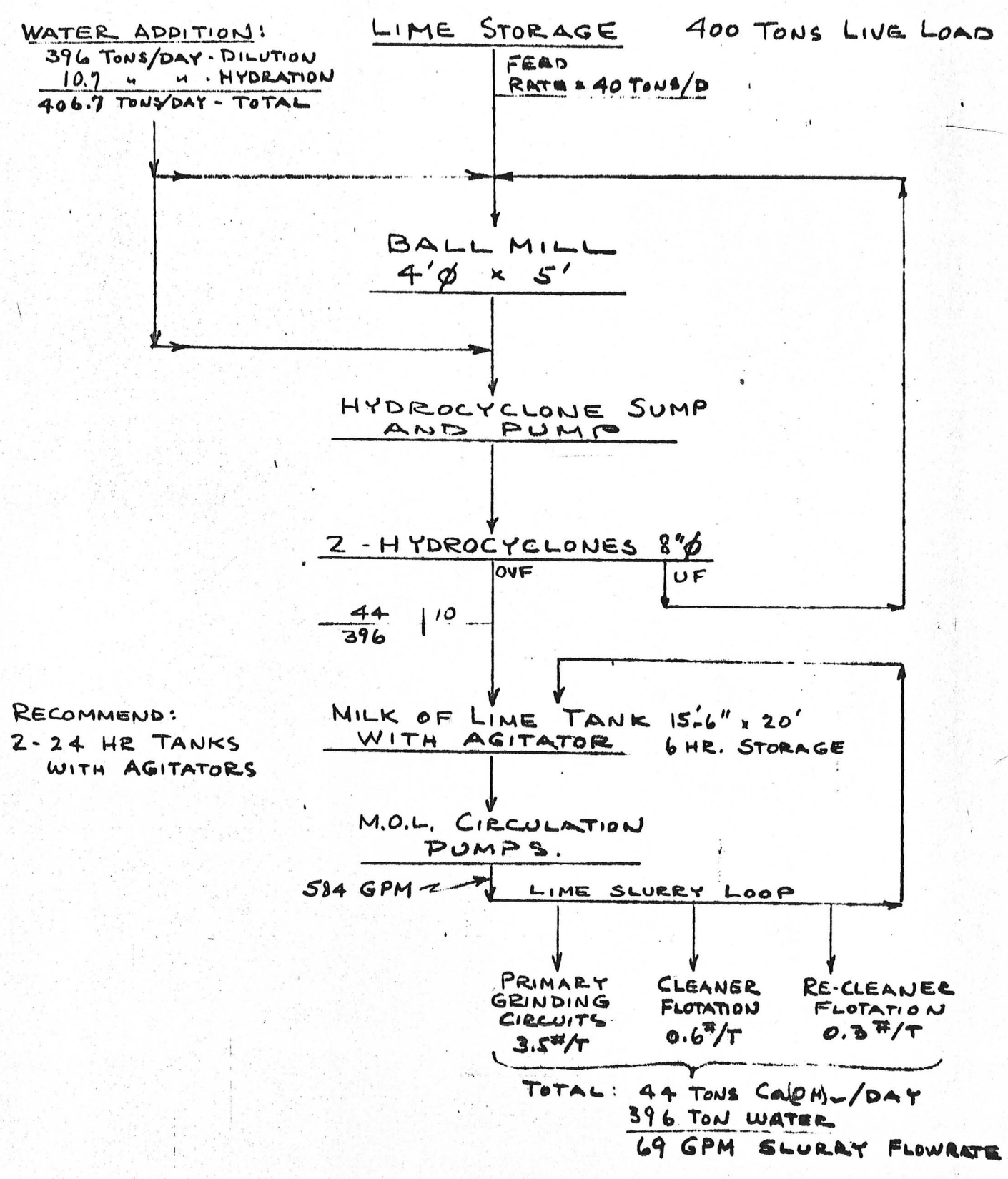

PARSONS-JURDEN CORPORATION - 26 Broadway, New York 4, N. Y.

COMPUTATIONS

JOB NO. 4832 - 01 | SHEET NO. 16 OF 19

PLANT VEKOL HILLS | MADE BY GATES DATE 1/8/71

SUBJECT LIME REAGENT COMPUTATIONS | CHECKED BY _____ DATE _____

LIME REQUIREMENTS: MAXIMUM.

MAXIMUM REQUIREMENTS OF SLAKED LIME ($Ca(OH)_2$) AS FOLLOWS:

GRINDING CIRCUITS =	3.5 LBS/TON ORE
CLEANER FLOT. CIRCUITS =	0.6 " " "
RE CLEANER FLOT. CIRCUITS =	0.3 " " "
TOTAL	4.4 " " "

$$4.4 \text{ LBS } Ca(OH)_2/T \times \frac{20\,000}{2000} = 44 \text{ TONS/D.}$$

$$44 \text{ TONS } Ca(OH)_2 \times \frac{56}{74} = 33.3 \text{ TONS AVAILABLE CaO IN PEBBLE LIME.}$$

ASSUME: PEBBLE LIME SUPPLIED CONTAINS 83% AVAIL. CaO

PEBBLE LIME REQUIREMENTS:

$$\frac{33.3}{.83} = \underline{40 \text{ TONS/DAY}} \text{ (MAX)}$$

WATER REQUIREMENTS:

WATER FOR HYDRATION:

CaO :	H_2O
56	18
33.3	TONS H_2O

$$\text{TONS WATER} = \frac{18 \times 33.3}{56} = \underline{10.7 \text{ TONS/D}}$$

WATER REQUIRED TO PRODUCE A 10% $Ca(OH)_2$ SLURRY. (SOLUBILITY FACTOR CONSIDERED NEGLIGABLE)

$$\frac{44}{.10} - 44 = \underline{396 \text{ TONS WATER/DAY}}$$

TOTAL PROCESS WATER FOR LIME REAGENT (MAX):

$$396 + 10.7 = \underline{406.7 \text{ TONS/DAY}}$$

PARSONS-JURDEN CORPORATION · 26 Broadway, New York 4, N. Y.

COMPUTATIONS

JOB NO. 4832-01 SHEET NO. 17 OF 19

PLANT VEKOL HILLS MADE BY GATES DATE 1/13/71

SUBJECT REAGENT STORAGE - FEED RATES CHECKED BY _____ DATE _____

STORAGE FOR 30 DAYS SUPPLY OF REAGENTS.

REAGENT:

AEROPROMOTOR No. 3302. Sp. GR = 1.03 LIQUID - USED WITHOUT DILUTION

AMOUNT REQUIRED: 0.009 LBS/TON ORE.

STORAGE REQUIRED.

20,000 x 30 x 0.009 = 5400 LBS FOR 30 DAY SUPPLY

AT APPROX. 450 LBS/DRUM = 12 DRUMS (55 GAL.)

FLOWRATES:

TOTAL: $\frac{20\,000}{1440} \times 0.009 = 0.125$ LBS/MIN.

$\times \frac{454}{1.03} = \pm 55$ ML/MIN. FOR TOTAL PLANT.

EACH MILL SECTION: $\frac{55}{4} = 13-14$ ML/MIN.

CLARKSON-TYPE FEEDERS RECOMMENDED FOR THIS SMALL FLOWRATE.

AEROPROMOTOR No. 3501. REACTIVE (CAUSTIC) WATER SOLUBLE WHITE SOLID

AMOUNT REQUIRED: 0.03 LBS/TON.

STORAGE REQUIRED.

20,000 x 30 x 0.03 = 18,000 LBS FOR 30 DAY SUPPLY

AT 300 LBS/DRUM = 60 DRUMS (42 GAL.)

FLOWRATES: AT 10% SOLN (SAY: 1 LB/1.2 GAL. SOLN.)

TOTAL: $\frac{20,000}{1440} \times 0.03 \times 1.2 = 0.5$ G.P.M.

@ 3.79 LITERS/GAL = 1.9 L/M = 1900 ML/MIN

$\frac{1900}{8} = 238$ ML./MIN. AT EACH OF 8 POINTS IN THE MILL CIRCUITS.

8 FLOWRATOR-TYPE FEEDERS

REAGENT MIXING & SOLN. STORAGE: 24 HRS.

20,000 x 0.03 x 1.2 = 720 GAL. STORAGE TANK

720 GAL. MIXING TANK.

TANKS: FIBER GLASS, S.S, OR PVC LINED.

PARSONS-JURDEN CORPORATION · 26 Broadway, New York 4, N. Y.

COMPUTATIONS

JOB NO. 4832-01 SHEET NO. 18 OF 19

PLANT VEKOL HILLS MADE BY GATES DATE 1/13/71

SUBJECT REAGENT STORAGE - FEED RATES (CONTINUED) CHECKED BY _____ DATE _____

REAGENT:

FROTHER: NOT SPECIFIED (ASSUME: AF #65) SP. G. = 1.01

TOTAL AMOUNT REQUIRED: 0.05 LBS/TON ORE.

STORAGE REQUIRED.

20,000 × 30 × 0.05 = 30,000 LBS FOR 30 DAY STORAGE.
÷ 8.33 : 3600 GAL. STORAGE TANK.
OR 65 DRUMS (55 GAL.)

FLOWRATES:

TOTAL: $\frac{20,000}{1440} \times 0.05 = 0.7$ LBS/MIN.
× 454 = 318 ML/MIN

DISTRIB: $\frac{70\%}{4} \times 318 = 56$ ML/MIN. TO EACH OF 4 ROUGHER SECTIONS.

$\frac{30\%}{4} \times 318 = 24$ ML/MIN. TO EACH OF 4 SCAV. SECTIONS.

(8 CLARKSON FEEDERS)

SUPER FLOC:

AMOUNT REQ'D: 5 P.P.M OF TAILINGS

STORAGE FOR 30 DAYS SUPPLY:

19670 TONS TAILS/DAY × 5×10^{-6} × 30 × 2000 = 6000 LBS

FLOWRATE: 1% SOL'N. (SAY: 1 LB/12 GAL. SOL'N.)

$\frac{19670 \times 5 \times 10^{-6}}{1440} \times 2000 = 0.137$ LBS/MIN.
× 12 = 1.64 GPM FEED RATE TO TKR.

FLOWRATOR RECOMMENDED

FEED & MIXING TANKS:

2 - 24 HR. SUPPLY.

1.64 × 1440 = 2362 GAL. CAP. EACH TANK

PARSONS-JURDEN CORPORATION - 26 Broadway, New York 4, N. Y.

COMPUTATIONS

JOB NO. 4832-01

PLANT VEKOL HILLS

SUBJECT CU CONCENTRATOR - MOLY PLANT PROCESS RELATIONSHIP

SHEET NO. 19 OF 19

MADE BY GATES DATE 2/18/71

CHECKED BY _____ DATE _____

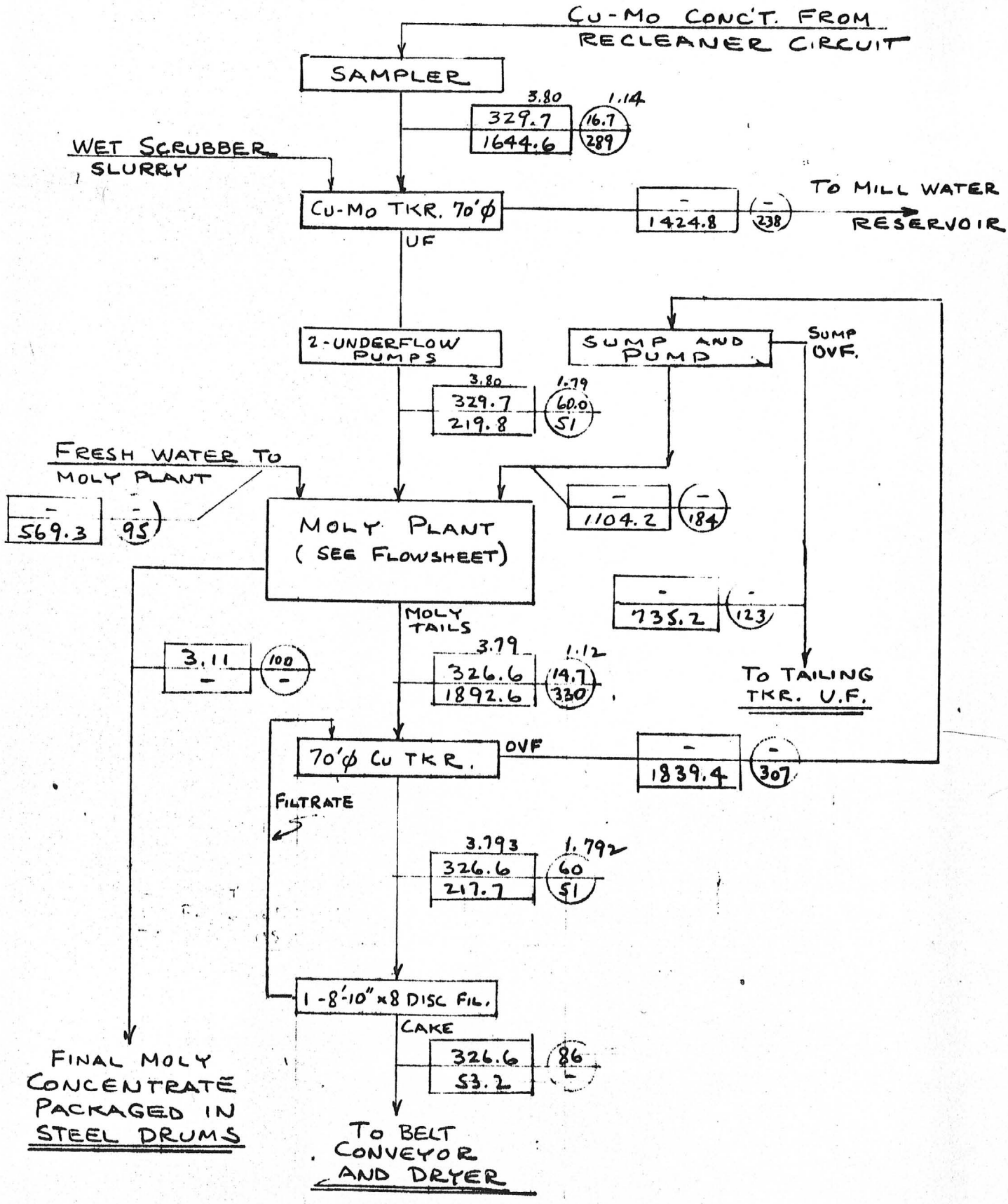

COMPUTATIONS
CRUSHING PLANT
BACK-UP DATA

PARSONS-JURDEN CORPORATION · 26 Broadway, New York, N.Y. 10004

COMPUTATIONS

JOB NO. 4832-1 SHEET NO. 1 OF 6

PLANT VEKOL HILL PROJECT MADE BY C.T. DATE 2-27-71

SUBJECT CRUSHING & SCREENING CHECKED BY _____ DATE _____

MATERIAL BALANCE

PLANT CAPACITY = 20,000 ST/DAY

ORE MINING SCHEDULE - TWO SHIFTS/DAY, FIVE DAYS/WK.

∴ ORE PRODUCTION PER DAY = $20,000 \times \frac{7}{5} = 28000$ TONS/DAY OR 14000 T/SHIFT.

REQUIRED PRODUCTION PER WEEK = 14000 × 10 = 140,000 TONS/WK.

PRIMARY CRUSHING

OPERATING SHIFTS/WK = 9

Operating Hrs/shift = 7

Operating Hrs/WK = 63

Design Rate S.T./H. = $\frac{140,000 \text{ T/WK}}{63 \text{ HR/WK}} = 2230$ T/H

60-89 GYRATORY CRUSHER WITH 6½" O.S.S. AND 130#/FT³ MATERIAL IS RATED ABOVE 2230 T/H.

AVERAGE CRUSHER PRODUCT SIEVE ANALYSIS: 90% -6½"

-9" + 6½"	= 10% =	223 T/H
-6½ + 2"	= 56% =	1249 T/H
-2" + 1"	= 14% =	312 T/H
-1 + ½"	= 7% =	156 T/H
-½ + ¼"	= 3% =	67 T/H
-¼ + 0"	= 10% =	223 T/H
	100% =	2230 T/H

FINE CRUSHING PLANT:

Operating Shifts/WK = 21
Operating Hrs/SHIFT = 6 (TRY)
TOTAL Operating Hrs/WK = 126
DESIGN RATE T/H = $\frac{140{,}000 \text{ T/WK}}{126 \text{ HRS/WK}}$ = 1110 T/HR

TO SIZE PRYMARY SCALPING SCREENS AHEAD OF SECONDARY CRUSHERS:

FEED TO SCALPING SCREENS: (TOP DECK)

-9 + 6½	= 10%	= 111 T/H	
-6½ + 2	= 56%	= 621 T/H	
-2 + 1	= 14%	= 156 T/H	378 T/H
-1 + ½	= 7%	= 78 T/H	
-½ + ¼	= 3%	= 33 T/H	
-¼ + 0	= 10%	= 111 T/H	
		1110 T/H	

TOP DECK - 2" GRIZZLY BARS (USE 120#/FT³ AT THIS POINT)

C_T = 378 T/H

C_T/A^2 = 3.9 × 1.2 = 4.7 T/H/FT² @ 67% OPEN AREA.
f_F = 20% = 0.7
f_O = 66% = 0.83
f_E = 95% = 1.00
f_S = Slotted = 1.2
f_{OA} = ASSUME 67% = 1

} 3.3 T/FT²

$$A = \frac{378 \text{ T/H}}{3.3 \text{ T/FT}^2/\text{H}} = 115 \text{ FT}^2$$

USE (2) 6'×12' SCREEN AREA AVAIL. = 2 × 5.5' × 12' = 132 FT²

AVAILABLE AREA 132 FT² > 115 FT² REQUIRED.

∴ THE EFFICIENCY OF THE TOP DECK IS BETTER THEN 95%. Then we can assume that all of the minus ½" material available in the feed to the top deck will pass, and that the remaining +½-2", 95% will pass.

FEED TO BOTTOM DECK:

-2"+1" = 156 × .95	=	148	
-1"+½ = 78 × .95	=	74	
-½+¼ = 33 × 1.00	=	33	144 T/H PASSING ½"
-¼+0 = 111 × 1.00	=	111	
		366 T/H	

BOTTOM DECK:

C_T = 144 T/H

C_T/A_F = 1.7 × 1.2 = 2.04 T/H/FT² @ 53% open Area.

f_F = 30% = 0.80

f_O = 61% = 0.85

f_e = 95% = 1.00

f_S = SQUARE = 1.00

f_{OA} = 53% = 1.00

f_D = Secon Deck = 0.90

} 1.25 T/H/FT²

$$A = \frac{144\ T/H}{1.25\ T/H/FT^2} = 115\ FT^2$$

AVAILABLE AREA IS 132 FT²

Deck is better then 95% efficient, therefore we can assume that 100% of the minus ¼" will pass the screen.

PARSONS-JURDEN CORPORATION · 26 Broadway, New York, N.Y. 10004

COMPUTATIONS

JOB NO. 4832-01 SHEET NO. 4 OF 6

PLANT VEKOL HILL PROJECT MADE BY C.T. DATE 2-27-71

SUBJECT CRUSH. & SCREEN. MATERIAL BALANCE CHECKED BY _____ DATE _____

Finished material is:

$-\frac{1}{2}" + \frac{1}{4} = 31$ T/H
$-\frac{1}{4} + 0 = 111$ T/H

142 T/H TO FINE ORE BIN

FEED TO SECONDARY CRUSHER IS: 1110 T/H − 142 T/H = = 968 T/H.

TO SIZE SECONDARY CRUSHER:

Feed rate per crusher is = 484 T/H
7FT. STD. Cone Crusher @ 1" C.S.S. is rated 600 T/H for 100#/FT³ material. RATED CAP for 120#/FT³ = 600 × 1.2 = 720 T/H

CRUSHER PRODUCT SIEVE ANALYSIS:

$-1\frac{3}{4}" + 1" = 40\% = 193$ T/H
$-1" + \frac{1}{2}" = 38\% = 184$ T/H
$-\frac{1}{2}" + \frac{1}{4} = 11\% = 53$ T/H
$-\frac{1}{4}" + 0 = 11\% = 54$ T/H
} 107 PASSING $\frac{1}{2}$"

100% = 484 T/H.

TO SIZE SECONDARY SCREENS:

C_T = 107 T/H

C_T/FT^2: 107 × 1.2 = 2.04 T/H/FT² @ 53% OPEN AREA
f_F = 11% = 0.55
f_O = 78% = 0.72
f_E = 85% = 1.5
f_S = SQUARE = 1.0
f_{OA} = 53% = 1.0
} 1.21 T/H/FT²

$A = \frac{107}{1.21} = 88$ FT²

6'×16' Screen. AREA = 5.5'×16' = 88 FT²

PJ-307 REV. 1

PARSONS-JURDEN CORPORATION · 26 Broadway, New York, N.Y. 10004

COMPUTATIONS

JOB NO. 4832-01 SHEET NO. 5 OF 6

PLANT VEKOL HILL PROJECT MADE BY C.T. DATE 2/27/71

SUBJECT CRUSH. & SCREEN. MATERIAL BAL. CHECKED BY _____ DATE _____

MATERIAL THRU (TO FINE ORE BINS)

$-\frac{1}{2} + \frac{1}{4} = 45$ T/H

$-\frac{1}{4} + 0 = 46$ T/H

91 T/H

MATERIAL OVER (ORIGINAL FEED TO TERT. CRUSH.)

$-1\frac{3}{4} + 1 = 193$ T/H

$-1 + \frac{1}{2} = 184$ T/H

$-\frac{1}{2} + \frac{1}{4} = 8$ T/H

$-\frac{1}{4} + 0 = 8$ T/H

393 T/H

TO DETERMINE CIRCULATING LOAD:

ORIGINAL FEED = 2 × 393 T/H = 786 T/H

OPERATING THE SH. HD. CRUSHER WITH $\frac{3}{8}$" C.S.S., THE AMOUNT OF $-\frac{1}{2}$" material in the crusher product IS 80%.

ASSUME SCREEN EFFICIENCY 85%

$$R = \frac{786}{0.80 \times 0.85} = 1150 \text{ T/H}$$

7 FT. SH. HD. CONE CRUSHER Operating at $\frac{3}{8}$" C.S.S. is rated 240 T/H for original feed, and 360 T/H for original feed including circulating load. The above ratings are for 100#/FT³ material.

Capacity for 120#/FT³ material is:

ORIGINAL FEED = 240 × 1.2 = 288 T/H > 262 T/H

TOTAL Feed = 360 × 1.2 = 432 > 384 T/H REQ

PJ-307 REV. 1

PARSONS-JURDEN CORPORATION - 26 Broadway, New York, N.Y. 10004

COMPUTATIONS

JOB NO. 4832-01 SHEET NO. 6 OF 6

PLANT VEKOL HILL PROJECT MADE BY C.T DATE 2/27/81

SUBJECT CRUSH. & SCREEN. MATERIAL BALANCE. CHECKED BY _____ DATE _____

CRUSHER PRODUCT @ 60% MINUS 3/8"

-1" + 1/2" = 20 %	=	230 T/H	
-1/2" + 1/4" = 32 %	=	370 T/H	920
-1/4 + 0" = 48 %	=	550 T/H	
100		1150 T/H	

TO SIZE FINISHING SCREENS (110 #/FT³)

$C_T = 920$

$C_T/_{FT} = 1.7 \times 1.1 = 1.87$ @ 53% OPEN AREA

$f_F = 48\% = 1.18$

$f_O = 20\% = 1.01$

$f_E = 85\% = 1.5$

$f_{OA} = \frac{57.1\%}{53\%} = 1.08$ (USE 0.162 WIRE)

} 3.62 T/H/FT²

$$A = \frac{920\ T/H}{3.62\ T/H/FT^2} = 254\ FT^2$$

USE (3) 6' x 16' SCREENS

AVAIL AREA IS = 5.5' x 16' x 3 = 264 FT²

264 FT² AVAIL > 254 FT² REQ.

END.

PJ-307 REV. 1

COMPUTATIONS
MOLY PLANT
BACK-UP DATA

PARSONS-JURDEN CORPORATION · 26 Broadway, New York 4, N. Y.

COMPUTATIONS

JOB NO. 4832-01 SHEET NO. 1 OF 6

PLANT YEKOL HILLS MOLY PLANT MADE BY R. BRISON DATE 2/3/71

SUBJECT REAGENTS CHECKED BY _____ DATE _____

SODIUM CYANIDE

TOTAL AM'T REQ'D = 3.39#/TON

= 3.39 X 330 = 1119#/DAY

= 1119 X 30 = 33,600#/MO

STORAGE Assume 200# DRUMS

STORAGE REQ'D FOR 30 DAYS

$= \frac{33,600}{200}$ = 167 DRUMS

FEEDING

USE 10% SOL'N

TOTAL USAGE/DAY = $\frac{1119}{.1} \times \frac{1}{8.34}$ = 1340 GALS.

NO. 1 COND.

$\frac{330}{1440} \times 0.39 \times \frac{454}{0.1}$ = 460 ML/MIN

USE FLOWMETER

NO. 4 CLEANER

$\frac{330}{1440} \times 3 \times \frac{454}{0.1}$ = 3120 ML/MIN

USE FLOWMETER

ZINC OXIDE

TOTAL AMT REQ'D = 0.09#/TON

= 0.09 X 330 = 30#/DAY

= 30 X 30 = 900#/MO.

STORAGE

ASSUME 100# BAGS — 9 BAGS

FEEDING

$\frac{330}{1440} \times 0.09$ = 0.02 #/MIN

USE CONE-TYPE DRY REAGENT FEEDER (DENVER)

6" SIZE 1/4 H.P.

PARSONS-JURDEN CORPORATION · 26 Broadway, New York 4, N. Y.

COMPUTATIONS

JOB NO. 4832-01 SHEET NO. 2 OF 6

PLANT VEKOL HILLS MOLY PLANT MADE BY R. BRISON DATE 2/11/7

SUBJECT REAGENTS CHECKED BY _____ DATE _____

HYDROGEN PEROXIDE

SHIP, STORE & USE AT 50% STRENGH PER FMC

TOTAL AM'T REQ'D @ 30% = 2.4 #/T

@ 50% = $\frac{30}{50} \times 2.4 = 1.44$ #/T

= 1.44 X 330 = 475.2 #/DAY

= 475.2 X 30 = 14256 #/MO

STORAGE

SHIP IN TANK TRUCKS

TRANSFER TO 5000 GAL. AL STORAGE TANK

FEEDING

TRANSFER TO 500 GAL. AL HOLDING TANK

FEED WITH PROPORTIONING PUMP TO

NO. 2 COND. ONLY

$\frac{330}{1440} \times 1.44 \times 454 = 150$ ML/MIN.

ESTIMATE INFO.

TOTAL PACKAGE INCL. STORAGE TANK, HOLDING TANK, TRANSFER PUMP, PROPORTIONING PUMP - APPROX. $5500 - $6000 PER FRANK CAROPRESO, FMC PRINCETON, N.J. (609-452-2300)

PARSONS-JURDEN CORPORATION · 26 Broadway, New York 4, N. Y.

COMPUTATIONS

JOB NO. 4832-01 SHEET NO. 3 OF 6

PLANT VEKOL HILLS MOLY PLANT MADE BY R. BRISON DATE 2/11/71

SUBJECT REAGENTS CHECKED BY _____ DATE _____

SULPHURIC ACID

TOTAL AM'T H_2SO_4 REQ'D = 2.1#/TON

= 2.1 X 330 = 693#/DAY

= 693 X 30 = 20,800#/MO

USE 66° BAUMÉ – 93% H_2SO_4 SP GR, 1.835

AM'T REQ'D = $\frac{20,800}{0.93}$ = 22,370#/MO

= 11.2 TONS/MO

STORAGE

SHIP IN 10 TON TANK TRUCKS

STORAGE REQ'D = 10 X 1.5 = 15 TONS

VOL. = $\frac{15 \times 2000}{8.34 \times 1.835}$ = 1960 GALS.

USE 2000 GALS. STEEL TANK

FEEDING

MAX. – NO. 2 COND. 1.1#/TON 100% H_2SO_4

$= \frac{330}{1440} \times \frac{1.1}{0.93} \times \frac{454}{1.835}$ = 67 ML/MIN

MIN. – NO. 1 CL. SCAV. 0.16#/TON

$= \frac{330}{1440} \times \frac{0.16}{0.93} \times \frac{454}{1.835}$ = 8 ML/MIN

USE PROPORTIONING PUMPS TO PERMIT AUTOMATIC pH CONTROL WHERE REQ'D.

6 PUMPS REQ'D.

PARSONS-JURDEN CORPORATION - 26 Broadway, New York 4, N. Y.

COMPUTATIONS

JOB NO. 4832-01 SHEET NO. 4 OF 6

PLANT VEKOL HILLS MOLY PLANT MADE BY R. BRISON DATE 2/3/71

SUBJECT REAGENTS CHECKED BY _____ DATE _____

SODIUM FERROCYANIDE

TOTAL AMT REQ'D = 2.59#/TON
= 2.59 X 330 = 855#/DAY
= 855 X 30 = 25,650#/MO.

STORAGE 256 - 100# BAGS

FEEDING USE 10% SOL'N

TOTAL USAGE/DAY =
$\frac{855}{.1} \times \frac{1}{8.34}$ = 1025 GALS

MAX - NO.1 RO: $2.1 \times \frac{330}{1440} \times \frac{454}{0.1}$ = 2185 ML/MIN

MIN - SCAV. : 0.24X " X " = 250 ML/MIN

USE FLOWMETERS . 3 REQ'D

PARSONS-JURDEN CORPORATION · 26 Broadway, New York 4, N. Y.

COMPUTATIONS

JOB NO. 4832-01 SHEET NO. 5 OF 6

PLANT VEKOL HILLS MOLY PLANT MADE BY R. BRISON DATE 2/3/71

SUBJECT REAGENTS CHECKED BY _____ DATE _____

POTASSIUM FERRICYANIDE

TOTAL AM'T REQ'D = 0.31#/TON
= 0.31 X 330 = 102#/DAY
= 102 X 30 = 3060#/MO.

STORAGE 31 - 100# BAGS

FLOW RATES USE 10% SOL'N

TOTAL USAGE/DAY =
$\frac{102}{.1} \times \frac{1}{8.34}$ = 122 GALS

FLOW @ 0.17#/TON = $0.17 \times \frac{330}{1440} \times \frac{454}{0.1}$ = 177 ML/MIN.

USE FLOWMETERS, 2 REQ'D

FUEL OIL

TOTAL AM'T REQ'D = 0.45#/TON
= 0.45 X 330 = 149#/DAY
= $\frac{149}{7.8}$ = 19 GAL/DAY
= 19 X 30 = 570 GAL/MO.

STORAGE 11 55-GAL DRUMS

FEEDING

ROUGHER $0.35 \times \frac{330}{1440} \times \frac{454}{0.94}$ = 39 ML/MIN.

SCAV. 0.10 X " X " = 11 ML/MIN.

USE CLARKSON-TYPE FEEDERS, 2 REQ'D
MODEL E - S.S.

PARSONS-JURDEN CORPORATION - 26 Broadway, New York 4, N. Y.

COMPUTATIONS

JOB NO. 4832-01 SHEET NO. 6 OF 6

PLANT YERKOL HILLS MOLY PLANT MADE BY R. BRISON DATE 2/11/7

SUBJECT REAGENTS CHECKED BY _____ DATE _____

SODIUM HYPOCHLORITE

PREPARED FROM NaOH and Cl_2 (See Dwg 4832-01-3) AS AT SAN MANUEL (INFO. FROM G. DOPSON, MILL SUPT.)

TOTAL AMT REQ'D = 0.83#/TON AS NaOCl

$$2\,NaOH + Cl_2 \rightarrow NaCl + NaOCl + H_2O$$

80 70.9 74.5

NaOH req'd = $\frac{80}{74.5} \times 0.83 = 0.891$ #/TON

Cl_2 req'd = $\frac{70.9}{74.5} \times 0.83 = 0.790$ #/TON

STORAGE (BASED ON SAN MANUEL)

Caustic Soda 50% : 13,000 GAL.
Liquid chlorine : Use from transport. tank
Sodium hypochlorite, 1.75% : 13,000 GAL

FEEDING

AMT REQ'D = 0.83#/TON AS NaOCl

$= 0.83 \times \frac{100}{1.75} = 47.4$ #Sol'n/TON

$= 47.4 \times \frac{330}{1440} \times 454 = 4930$ ML/MIN

USE PROPORTIONING PUMP, 1 REQ'D

COMPUTATIONS
MOLY PLANT
EQUIPMENT SIZING

PARSONS-JURDEN CORPORATION - 26 Broadway, New York 4, N. Y.

COMPUTATIONS

JOB NO. 4832-01 SHEET NO. 1 OF 8

PLANT VEKOL HILLS MOLY PLANT MADE BY R. BRISON DATE 1/21/71

SUBJECT PROCESS EQUIPMENT SIZING CHECKED BY _____ DATE _____

CRITERIA FOR PUMPS:

1. USE ONE PUMP PLUS STANDBY AT EACH STATION
2. SIZE FOR NORMAL FLOW +25% (EXCEPT AS NOTED)
3. PLAN USE BOTH PUMPS FOR ABNORMAL OR OPTIONAL FLOWS, IF REQ'D.
4. FOR PRELIM. H.P. ESTIMATE, ASSUME 50' TDH ON ALL PUMPS
5. USE VERTICAL PUMPS FOR ALL FROTHS, WITH CAP. 2X FLOWSHEET FLOW.
6. SIZE SUMPS FOR 1 MINUTE RETENTION, MINIMUM
7. ALL HORIZONTAL SLURRY PUMPS RUBBER LINED.

PARSONS-JURDEN CORPORATION - 26 Broadway, New York 4, N. Y.

COMPUTATIONS

JOB NO. 4832-01 SHEET NO. 2 OF 8

PLANT VEKOL HILLS MOLY PLANT MADE BY R. BRISON DATE 1/21

SUBJECT PROCESS EQPT. SIZING CHECKED BY _____ DATE _____

CU-MO THICKENER UNDERFLOW PUMPS (1 + standby)

Horizontal slurry type
2" X 1½"
Included in copper concentrator flowsheet and estimate.

MOLY PLANT FEED SAMPLER (1)

18" travel, std duty, ¼ H.P.

CONDITIONERS (2 in series)

GPM = 51.1 X 1.25 = 64
Time: 20 min. avg.
Vol. req'd, each = $\frac{20}{2}$ x 64 = 640 gals

Use 6' x 6', 7½ HP. each.

ROUGHER FEED PUMP (1 + standby)

Horizontal slurry type
GPM = 194.7 x 1.25 = 243
Use 4" x 3" pump
HP = $\frac{243 \times 50 \times 1.28}{3960 \times 0.5}$ = 7.85 Use 10 HP

Sump: 240 gals.

NO. 1 ROUGHER CELLS

Feed = 194.7 gpm = $\frac{194.7}{7.48}$ = 26.0 cfm
Flot. time req'd = 6 min
Vol. req'd = 6 x 26.0 = 156 cu. ft
Use 4 cells @ 40 cu. ft. = 160 cu. ft.
Actual flot. time = $\frac{160}{26.0}$ = 6.2 min.

NO. 2 ROUGHER CELLS

Use same as NO. 1 ROUGHER: 4 cells @ 40 cu. ft.
Flot. time, req'd = 6 min. Actual = 6.7 min.

PARSONS-JURDEN CORPORATION · 26 Broadway, New York 4, N. Y.

COMPUTATIONS

JOB NO. 4832-01 SHEET NO. 3 OF 8

PLANT VEKOL HILLS MOLY PLANT MADE BY R. BRISON DATE 1/21/71

SUBJECT PROCESS EQPT SIZING CHECKED BY _____ DATE _____

NO. 1 CLEANER FEED PUMP (1+standby)

Vertical type

GPM = 175.1 x 2 = 350 GPM

Use 3 1/2"

HP from Gallagher graph = 16 x 1.07 = 17.1 Use 20 H.P.

Sump: 350 gals.

NO. 1 CLEANER CELLS

Feed = 175.1 GPM = $\frac{175.1}{7.48}$ = 23.4 CFM

Flotd time req'd = 4 min

Vol. req'd = 23.4 x 4 = 93.6 cu. ft.

Use 4 cells @ 40 cu. ft. = 160 cu. ft.

Actual flot. time = $\frac{160}{23.4}$ = 6.8 min.

SCAVENGER CELLS

Feed = 169.0 GPM = $\frac{169.0}{7.48}$ = 22.6 CFM

Flot. time req'd = 8 mins.

Vol. req'd = 22.6 x 8 = 180.8 cu. ft

Use 4 cells @ 40 cu. ft. = 160 cu. ft.

Actual flot. time = $\frac{160}{22.6}$ = 7.1 min.

Note: Actual flot. time No. 1 cleaner + scavenger = 13.9 min vs. 12 min. req'd.

FINAL COPPER CONCENTRATE SAMPLER

18" Travel, std. duty, 1/4 HP

PARSONS-JURDEN CORPORATION · 26 Broadway, New York 4, N. Y.

COMPUTATIONS

JOB NO. 4832-01 SHEET NO. 4 OF 8

PLANT VEKOL HILLS MOLY PLANT MADE BY R. BRISON DATE 1/25/70

SUBJECT PROCESS EQPT SIZING CHECKED BY _____ DATE _____

MOLY PLANT TAILS PUMP (1+standby)

Horizontal slurry type

GPM = 329.8 x 1.25 = 412

Use 5" X 4" PUMP

$HP = \frac{412 \times 50 \times 1.12}{3960 \times 0.6} = 9.7$. Use 10 HP

Sump: 400 gals

REGRIND CYCLONE FEED PUMP (1+standby)

Horizontal, slurry type

Size for 2x normal flow

GPM = 49.2 x 2 = 98.4

Use 2½" x 2" pump

$HP = \frac{98.4 \times 1.15 \times 50}{3960 \times 0.5} = 2.86$ Use 5 HP

Sump: 100 gals.

REGRIND CYCLONE (1+1 standby)

Feed = 98.4 gpm max

Use 6" cyclone, rubber lined, with adjustable apex.

REGRIND MILL (1)

Overflow type with drum feeder

Feed = 29.0 TPD = 1.21 TPH

Assume feed = 80% -100 mesh (149 microns)

" product = 80% -400 mesh (37 microns)

Assume $W_i = 15$

$W = \frac{10 W_i}{\sqrt{P}} - \frac{10 W_i}{\sqrt{F}} = \frac{150}{6.08} - \frac{150}{12.21} = 12.4$

Correction for fine grinding:

$A_1 = \frac{P + 10.3}{1.145P} = \frac{42.3}{42.37} = 1.12$

Corrected W = 1.12 x 12.4 = 13.9 (cont'd p. 5)

PARSONS-JURDEN CORPORATION · 26 Broadway, New York 4, N. Y.

COMPUTATIONS

JOB NO. 4832-01 SHEET NO. 5 OF 8

PLANT VEKOL HILLS MOLY PLANT MADE BY R. BRISON DATE 1/21/71

SUBJECT PROCESS EQP'T SIZING CHECKED BY _____ DATE _____

REGRIND MILL (cont'd)

HP req'd = 13.9 x 1.341 X1.21 = 22.5

Use 4'X6' mill with 40HP motor

NO. 2 CLEANER FEED PUMP (1 + stand by)

Horizontal, slurry type

GPM = 127.5 x 1.25 = 159.4

Use 4" x 3" pump

$HP = \frac{159.4 \times 50 \times 1.05}{3960 \times 0.5} = 4.2$ Use 5 HP

Sump: 200 gals.

NO. 2 CLEANER CELLS

Feed = 127.5 GPM = $\frac{127.5}{7.48}$ = 17.05 cfm

Flot. time = 4 min.

Vol. req'd = 4 x 17.05 = 68.2 cu. ft

Use 4 cells @ 22.5 = 90 cu. ft.

Actual flot time = $\frac{90}{17.05}$ = 5.3 min.

NO. 3 CLEANER FEED PUMP

Vertical type

Feed = 79.6 x 2 = 159.2 gpm.

Use 2½" pump

HP = 1.03 x 8.4 = 8.7 Use 10 HP.

Sump: 200 gals.

NO. 3 CLEANER CELLS

Feed = 79.6 gpm = $\frac{79.6}{7.48}$ = 10.64 cfm

Flot. time = 4 min

Vol. req'd = 4 x 10.64 = 42.56 cu. ft.

Use 2 cells @ 22.5 cu ft = 45 cu. ft.

Actual flot time = $\frac{45}{10.64}$ = 4.2 min.

PARSONS-JURDEN CORPORATION - 26 Broadway, New York 4, N. Y.

COMPUTATIONS

JOB NO. 4832-01 SHEET NO. 6 OF 8

PLANT VEKOL HILLS MOLY PLANT MADE BY R. BRISON DATE 1/25/71

SUBJECT PROCESS EQPT. SIZING CHECKED BY _____ DATE _____

NO. 4 CLEANER FEED PUMP (1 + standby)

Vertical type

Feed = 16.9 x 1.25 = 21.1 gpm.

Use 1½" pump.

HP = 2.3 x 1.03 = 2.37 Use 3 HP.

Sump: 50 gals.

NO. 4 CLEANER CELLS

Feed = 32.1 gpm = $\frac{32.1}{7.48}$ = 4.29 cfm

Flot. time = 5 min.

Vol. req'd = 5 x 4.29 = 21.5 cu. ft.

Use 2 cells @ 12 cu. ft = 24 cu. ft (Denver #15 cells - cell to cell type)

Actual flot. time = $\frac{24}{4.29}$ = 5.6 min.

NO. 5 CLEANER CELLS

Feed = 16.0 gpm = 16.0/7.48 = 2.14 cfm.

Use 1 cell @ 12 cu. ft

Actual flot time = $\frac{12}{2.14}$ = 5.6 min vs. 3 min req'd.

NO. 6 CLEANER CELLS

Feed = 12.8 gpm = 12.8/7.48 = 1.71 cfm

Use 1 cell @ 12 cu. ft.

Actual flot. time = $\frac{12}{1.71}$ = 7.0 min vs 3 min. req'd.

MOLY CONCENTRATE SAMPLER (1)

18" travel, std duty, ¼ HP

PARSONS-JURDEN CORPORATION - 26 Broadway, New York 4, N. Y.

COMPUTATIONS

JOB NO. 4832-01 SHEET NO. 7 OF 8

PLANT YEKOL HILLS MOLY PLANT MADE BY R. BRISON DATE 1/25/71

SUBJECT PROCESS EQPT SIZING CHECKED BY _____ DATE _____

MOLY CONCENTRATE SURGE TANK (1)

WITH OPEN-TYPE AGITATOR

Provide 24 hr. storage

Feed = 2.2 gpm

Vol. req'd = $\frac{2.2}{7.48} \times 60 \times 24 = 423$ cu. ft

Use tank 9' dia x 9'

Vol. for 7' ht. = 445 cu. ft = 25 hr. storage.

H.P. = 7½

MOLY FILTER (1)

Feed = 3.1 STPD @ 20% solids

Filtrate = 2 gpm.

Assume min. filter rate = 100#/sq. ft./24 hrs

Area req'd = $\frac{3.1 \times 2000}{100} = 62$ sq. ft.

Use 4' dia x 4 disc = 88 sq. ft.

Actual filter rate = $\frac{3.1 \times 2000}{88} = 70.5$#/sq. ft/24 hrs

For 8 hr. oper/day rate = 3 x 70.5 = 211.5

" 16 hr. oper/day rate = 1.5 x 70.5 = 105.8

Use 4' dia x 4 disc filter, with vacuum pump (300 cfm) filtrate receiver, air blower.

MOLY DRYER (1)

Feed = 3.1 TPD conc + 0.7 TPD water

Use Holoflite dryer (Joy Mfg. Co.)

Size 1D 714-4

One tier, dual screw, 7" dia, 14' long, 4" pitch

Cap. approx 10 TPD @ 18% H_2O in feed.

Requires 1" neg. pressure.

Requires ht. transfer medium, tank and heater (70 Kw)

PARSONS-JURDEN CORPORATION · 26 Broadway, New York 4, N. Y.

COMPUTATIONS

JOB NO. 4832-01 SHEET NO. 8 OF 8

PLANT VEKOL HILLS MOLY PLANT MADE BY R. BRISON DATE 1/23/71

SUBJECT PROCESS EQPT SIZING CHECKED BY _____ DATE _____

MOLY FILTER FEED PUMP (1 + standby)

Horizontal slurry type

Size for 3 X normal flow

GPM = 4.4 x 3 = 13.2

Use 1¼" x 1" pump.

$$HP = \frac{13.2 \times 50 \times 1.19}{3960 \times 0.3} = 0.66 \text{ use } 1 HP$$

PRODUCT SCALE (1)

Platform weigh scale, 1000# cap.