CONTACT INFORMATION
Mining Records Curator
Arizona Geological Survey
1520 West Adams St.
Phoenix, AZ 85007
602-771-1601
http://www.azgs.az.gov
inquiries@azgs.az.gov

The following file is part of the

Arizona Department of Mines and Mineral Resources Mining Collection

ACCESS STATEMENT

These digitized collections are accessible for purposes of education and research. We have indicated what we know about copyright and rights of privacy, publicity, or trademark. Due to the nature of archival collections, we are not always able to identify this information. We are eager to hear from any rights owners, so that we may obtain accurate information. Upon request, we will remove material from public view while we address a rights issue.

CONSTRAINTS STATEMENT

The Arizona Geological Survey does not claim to control all rights for all materials in its collection. These rights include, but are not limited to: copyright, privacy rights, and cultural protection rights. The User hereby assumes all responsibility for obtaining any rights to use the material in excess of "fair use."

The Survey makes no intellectual property claims to the products created by individual authors in the manuscript collections, except when the author deeded those rights to the Survey or when those authors were employed by the State of Arizona and created intellectual products as a function of their official duties. The Survey does maintain property rights to the physical and digital representations of the works.

QUALITY STATEMENT

The Arizona Geological Survey is not responsible for the accuracy of the records, information, or opinions that may be contained in the files. The Survey collects, catalogs, and archives data on mineral properties regardless of its views of the veracity or accuracy of those data.

PARSONS-JURDEN CORPORATION — ESTIMATE WORKSHEET

PJ348-DONLYN PRINTED IN U.S.A. DATE 3-71 SHEET 5 OF ____ M.T.O. BY ____ PRICED BY ____

JOB NO.: 4332-01 CLIENT: NEL TYPE OF ESTIMATE CKD. BY E

PROJECT: VEROL HILL

ACCOUNT NO.		QUANTITY	UNIT	COST UNIT MATERIAL	COST UNIT LABOR	MATERIALS AND EXPENSE	SUB CONTRACTS	LABOR MH	TOTAL COST
	160-63 MOLYBDENUM PLANT & REAGENTS								
	CLEANER NO 4 FEED SUMP	1	EA			800		10	
	SUMP PUMPS	2	EA	600.	15.0	1200		30	
	VERTICAL SIZE - 1½" MOTOR - 3 H P EA								
	CLEANER CELLS NO 4, No. 5, No. 6	4	EA			3800		100	
	CAPACITY - 12 CFT MOTOR — 3 - 3 H.P.								
	BLOWER 1200CFM 15HP	1	EA.			4200		40	
	FLOOR SUMP PUMP 1½" 3HP	1	EA.			600		10	
	MOLY CONCENTRATE SAMPLER	1	EA			950		20	
	TRAVEL - 18" MOTOR - 1/4								
	DUST CONTROL SYST. 600CFM INCL. DUCTWORK FOR DRUM FILLING 3HP					1200		150	

SHEET NO. M-8

PARSONS-JURDEN CORPORATION — ESTIMATE WORKSHEET

PJ34B-DONLYN PRINTED IN U.S.A.

DATE 3-71 SHEET 6 OF ____ M.T.O. BY ____ PRICED BY ____

JOB NO.: 4832-61 CLIENT: NEL TYPE OF ESTIMATE CKD. BY C

PROJECT: VEROL HILL

ACCOUNT NO.		QUANTITY	UNIT	COST UNIT MATERIAL	COST UNIT LABOR	MATERIALS AND EXPENSE	SUB CONTRACTS	LABOR MH	TOTAL COST
	160-63 MOLYBDENUM PLANT & REAGENTS								
	SURGE TANK - 9' DIA x 9'	1	EA.			1300		20	
	AGITATOR - 7½ H.P	1	EA.			2200		40	
	FILTER FEED PUMPS	2	EA	600.	10.0	1200		20	
	SIZE - 1¼ x 1" R.L.								
	MOTOR - 1 H.P.								
	MOLY FILTER	1	EA			16400		150	
	DISC TYPE WITH AGITATOR								
	SIZE - 4' DIA x 4 DISC								
	MOTOR - 2½ H P EA.								
	MOLY DRYER	1	EA			23000		150	
	HOLOFLITE 10714-4								
	MOTOR - 3 H.P. & 70 KW HEATER								
	CONVEYOR	1	EA			300		5	
	STEEL ROLLER TYPE								
	CONVEYOR SCALE	1	EA			2000		10	
	OVERHEAD CRANE - PENDANT OPERATED	1	EA			30000		500	
	CAP. 5. TON SPAN. 60'								

SHEET NO. M-9

PARSONS-JURDEN CORPORATION

ESTIMATE WORKSHEET

PJ34B-DONLYN PRINTED IN U.S.A.

DATE 3-71 SHEET 7 OF

M.T.O. BY

PRICED BY

JOB NO.: 4832-01 CLIENT: NEL

TYPE OF ESTIMATE

CKD. BY

PROJECT: VEKOL HILL

ACCOUNT NO.		QUANTITY	UNIT	COST UNIT MATERIAL	COST UNIT LABOR	MATERIALS AND EXPENSE	SUB CONTRACTS	LABOR MH	TOTAL COST
	160-63 MOLYBDENUM PLANT & REAGENTS								
	SODIUM CYANIDE REAGENT								
	MIXING TANK 1340 GAL 6'd x 8'H C.S.	1	EA			1200		20	
	TRANSFER PUMP C.S.	1	EA			1000		10	
	STORAGE TANK. CAP. = 1340 GAL. 6'd x 8'H C.S.	1	EA			600		10	
	TRANSFER PUMP CAPACITY - 2 GPM	1	EA			800		10	
	HEAD TANK CAPACITY - 50 GAL. 2'D x 2'H C.S.	1	EA			50		5	

SHEET NO. A1-10

PARSONS-JURDEN CORPORATION ESTIMATE WORKSHEET

PJ348-DONLYN PRINTED IN U.S.A.

DATE 3-71 SHEET 8 OF ____ M.T.O. BY ____ PRICED BY ____

JOB NO.: 4832-01 CLIENT: NEL TYPE OF ESTIMATE CKD. BY

PROJECT: VEKOL HILL.

ACCOUNT NO.		QUANTITY	UNIT	COST UNIT MATERIAL	COST UNIT LABOR	MATERIALS AND EXPENSE	SUB CONTRACTS	LABOR MH	TOTAL COST
	160-63 MOLYBDENUM PLANT & REAGENTS								
	FUEL OIL SYSTEM.								
	BARREL PUMP	1	EA			500		10	
	STORAGE TANK CAPACITY - 100 GAL 3'ø x 3' C.S.	1	EA.			100		5	
	TRANSFER PUMP CAPACITY - 2 GPM	1	EA			800		10	
	HEAD TANK - 50 GAL. 2'ø x 2' C.S.	1	EA			50		5	
	FEEDERS - CLARKSON	3	EA	250.	10.0	750		30	

SHEET NO. M-11

PARSONS-JURDEN CORPORATION

ESTIMATE WORKSHEET

PJ34B-DONLYN PRINTED IN U.S.A.

DATE 3-71 SHEET 9 OF

M.T.O. BY

PRICED BY

JOB NO.: 4332-01 CLIENT: NEL

TYPE OF ESTIMATE

CKD. BY

PROJECT: VEKOL HILL

ACCOUNT NO.		QUANTITY	UNIT	COST/UNIT MATERIAL	COST/UNIT LABOR	MATERIALS AND EXPENSE	SUB CONTRACTS	LABOR MH	TOTAL COST
	160-63 MOLYBDENUM PLANT & REAGENTS								
	HYDROGEN PEROXIDE-50% SYSTEM								
	TRANSFER PUMP SIZE 2" S.S.	1	EA			1800		10	
	STORAGE TANK CAPACITY 5000 GAL 10'Ø x 10' VERT ALUM.	1	EA			4000		10	
	TRANSFER PUMP CAP. - 5 GPM S.S.	1	EA			1600		10	
	HOLDING TANK 500 GAL 5'Ø x 5' H ALUM.	1	EA			1000		5	
	PROPORTIONING PUMP S.S.	1	EA			2000		10	

SHEET NO. M-12

PARSONS-JURDEN CORPORATION

ESTIMATE WORKSHEET

PJ348-DONLYN PRINTED IN U.S.A.

DATE 3-71 SHEET 10 OF ____ M.T.O. BY ____ PRICED BY ____

JOB NO.: 4832-01 CLIENT: NEL TYPE OF ESTIMATE CKD. BY C

PROJECT: UEKOL HILL

ACCOUNT NO.		QUANTITY	UNIT	COST UNIT MATERIAL	COST UNIT LABOR	MATERIALS AND EXPENSE	SUB CONTRACTS	LABOR MH	TOTAL COST
	160-63 MOLYBDENUM PLANT & REAGENTS.								
	SODIUM FERROCYANIDE SYSTEM								
	MIXING TANK 6'ϕ x 8'H C.S.	1	EA			1200		20	
	TRANSFER PUMP CAP. - 2 GPM	1	EA			800		10	
	STORAGE TANK 1025 GAL 6'ϕ x 8' C.S.	1	EA			600		10	
	TRANSFER PUMP 2 GPM	1	EA			800		10	
	HEAD TANK 50 GAL 2'ϕ x 2' C.S.	1	EA			50		5	

SHEET NO. M-13

PARSONS-JURDEN CORPORATION

ESTIMATE WORKSHEET

PJ34B-DONLYN PRINTED IN U.S.A.

DATE 3-71 SHEET ____ OF ____

M.T.O. BY ____
PRICED BY ____

JOB NO.: 4832-01 CLIENT: NEL

TYPE OF ESTIMATE

CKD. BY

PROJECT: VEKOL HILL

ACCOUNT NO.		QUANTITY	UNIT	COST UNIT MATERIAL	COST UNIT LABOR	MATERIALS AND EXPENSE	SUB CONTRACTS	LABOR MH	TOTAL COST
	160-63 MOLYBDENUM PLANT & REAGENTS.								
	POTASSIUM FERRICYANIDE.								
	MIXING TANK 3'ø x 4'H C.S.	1	EA			600		10	
	TRANSFER PUMP CAP - 2 GPM	1	EA			800		10	
	STORAGE TANK 3'ø x 4'H C.S.	1	EA			300		5	
	TRANSFER PUMP CAP - 2GPM	1	EA			800		10	
	HEAD TANK 50 GAL 2'ø x 2'H C.S.	1	EA			50		5	

SHEET NO. 14-14

PARSONS-JURDEN CORPORATION

ESTIMATE WORKSHEET

PJ348-DONLYN PRINTED IN U.S.A.

DATE 3-71 SHEET 12 OF

M.T.O. BY

PRICED BY

JOB NO.: 4832-01 CLIENT: NEL

TYPE OF ESTIMATE

CKD. BY C

PROJECT: VEKOL HILL

ACCOUNT NO.		QUANTITY	UNIT	COST/UNIT MATERIAL	COST/UNIT LABOR	MATERIALS AND EXPENSE	SUB CONTRACTS	LABOR MH	TOTAL COST
	160-63 MOLYBDENUM PLANT & REAGENTS								
	SODIUM HYPOCHLORITE SYSTEM								
	CAUSTIC SODA								
	TRANSFER PUMP 50 GPM	1	EA			1200		10	
	STORAGE TANK 13,000 GAL 13'Ø x 15'H C.S.	1	EA			4000		40	
	PROPORTIONING PUMP	1	EA			2000		10	
	LIQUID CHLORINE								
	HEAT EXCHANGER	1	EA			5000		50	

SHEET NO. M-15

PARSONS-JURDEN CORPORATION

ESTIMATE WORKSHEET

PJ348-DONLYN PRINTED IN U.S.A.

DATE 3-71 SHEET 13 OF ____ M.T.O. BY ____ PRICED BY ____

JOB NO.: 4832-01 CLIENT: NEL TYPE OF ESTIMATE CKD. BY

PROJECT: VEROL HILL

ACCOUNT NO.		QUANTITY	UNIT	COST UNIT MATERIAL	COST UNIT LABOR	MATERIALS AND EXPENSE	SUB CONTRACTS	LABOR MH	TOTAL COST
	160-63 MOLYBDENUM PLANT & REAGENT								
	MIXING TANK	1	EA			2000		50	
	8' DIA x 30' LG WITH PERFORATED								
	SILVER TUBING								
	STORAGE TANK	1	EA			10000		60	
	13000 GAL 13'Ø x 15'H PVC LINED								
	TRANSFER PUMP	1	EA			1800		10	
	S.S.								
	HOLDING TANK	1	EA			800		10	
	CAPACITY - 500 GAL 5'Ø x 5'H PVC LINED								
	PROPORTIONING PUMP	1	EA			2000		10	
	CAP. - 3 GPM S.S.								

SHEET NO. M-16

PARSONS-JURDEN CORPORATION

ESTIMATE WORKSHEET

PJ34B-DONLYN PRINTED IN U.S.A.

DATE 3-71 SHEET 15 OF

M.T.O. BY

PRICED BY

JOB NO.: 4832-01 CLIENT: NEL

TYPE OF ESTIMATE

CKD. BY

PROJECT: VEKOL HILL

ACCOUNT NO.		QUANTITY	UNIT	COST UNIT MATERIAL	COST UNIT LABOR	MATERIALS AND EXPENSE	SUB CONTRACTS	LABOR MH	TOTAL COST
	160-63 MOLYBDENUM PLANT & REAGENTS								
	ZINC OXIDE								
	DRY REAGENT FEEDER	1	EA.			500		10	
	CONE TYPE, 6" DIA								
	DRUM CARRIER	1	EA.			1000		10	
	REGRIND BALL MILL BIN	1	EA.			500		10	
	FORK LIFT TRUCK - 3 T	1	EA.			10000		20	
	TANK EXHAUST SYST. 1500 CFM 2HP FAN INCL. DUCTWORK					1500		100	
	TOTAL PROCESS EQUIPMENT							3895	X 7.96
	ADJUST					40			
	TOTAL PROCESS EQUIPMENT					260200		31000	291200

SHEET NO. M-13

PARSONS-JURDEN CORPORATION

ESTIMATE WORKSHEET

PJ34B-DEMLYN PRINTED IN U.S.A.

DATE 3-71 SHEET 1 OF 1

M.T.O. BY
PRICED BY

JOB NO. 4832-01 CLIENT: NEL

TYPE OF ESTIMATE

CKD. BY

PROJECT: VERÖL HILL

ACCOUNT NO.		QUANTITY	UNIT	COST UNIT MATERIAL	COST UNIT LABOR	MATERIALS AND EXPENSE	SUB CONTRACTS	LABOR	TOTAL COST
	160-64 MOLYBDENUM PLANT & REAGENTS - PIPING							MH	
	TOTAL PIPING					30000		4300	
	TOTAL PIPING (M.H)							4300 x 9.31	
	TOTAL PIPING $					30000		40000	70000

SHEET No. 18-19

PARSONS-JURDEN CORPORATION

ESTIMATE WORKSHEET

PJ34S-DONLYN PRINTED IN U.S.A.

DATE 3-71 SHEET ____ OF ____

M.T.O. BY ____

PRICED BY ____

JOB NO.: 4832 CLIENT: NEL

TYPE OF ESTIMATE

CKD. BY ℓ

PROJECT: VERDE HILL

ACCOUNT NO.		QUANTITY	UNIT	COST UNIT MATERIAL	COST UNIT LABOR	MATERIALS AND EXPENSE	SUB CONTRACTS	LABOR MH	TOTAL COST
	160-65 MOLY PLANT & REAGENTS								
	ELECTRICAL					45000		3500	
	TOTAL ELECTRICAL (MN)							3500 x 13.00	
	TOTAL ELECTRICAL (Σ)					45000	45500		90500

SHEET NO. M-20

PARSONS-JURDEN CORPORATION

ESTIMATE WORKSHEET

PJ34B-DONLYN PRINTED IN U.S.A.

DATE 3-71 SHEET 1 OF 1

M.T.O. BY

PRICED BY

JOB NO.: 4832-01 CLIENT: NEL

TYPE OF ESTIMATE

CKD. BY

PROJECT: VEROL HILL

ACCOUNT NO.		QUANTITY	UNIT	COST UNIT MATERIAL	COST UNIT LABOR	MATERIALS AND EXPENSE	SUB CONTRACTS	LABOR MH	TOTAL COST
	160-66 MOLYBDENUM PLANT & REAGENTS - PAINTING.								
	STRUCTURAL	110	GAL.	7.00	3.0	770		330	
	EQUIPMENT	50	GAL	7.00	3.0	350		150	
	TOTAL PAINTING (M.H)							480 x 6.90	
	ADJUST					80			
	TOTAL PAINTING $					1200		3300	4500

SHEET NO. M-21

205

PARSONS-JURDEN CORPORATION

ESTIMATE WORKSHEET

PJ34B-DONLYN. PRINTED IN U.S.A.

DATE 3-71 SHEET 1 OF 1

M.T.O. BY
PRICED BY

JOB NO.: 4832-01 CLIENT: NEL

TYPE OF ESTIMATE

CKD. BY LWG

PROJECT: VEROL HILL

ACCOUNT NO.		QUANTITY	UNIT	COST UNIT MATERIAL	COST UNIT LABOR	MATERIALS AND EXPENSE	SUB CONTRACTS	LABOR	TOTAL COST
	160-67 MOLYBDENUM PLANT & REAGENTS - INSTRUMENTATION								
	TOTAL INSTRUMENTATION					30000			
	TOTAL INSTRUMENTATION LABOR						16000		
	TOTAL INSTRUMENTS $					30000	16000		46000

SHEET NO. M-22

PARSONS-JURDEN CORPORATION

ESTIMATE WORKSHEET

PJ34B-DONLYN PRINTED IN U.S.A.

DATE 3-71 SHEET ____ OF ____ M.T.O. BY ____ PRICED BY ____

JOB NO.: 4832 CLIENT: NEL TYPE OF ESTIMATE CKD. BY

PROJECT: VEKOL HILL

ACCOUNT NO.		QUANTITY	UNIT	COST UNIT MATERIAL	COST UNIT LABOR	MATERIALS AND EXPENSE	SUB CONTRACTS	LABOR	TOTAL COST
	170 - INCOMING POWER								
	QUOTE BY. P.T.U.A					860000			860000
						860000			860000

SHEET NO. PS-1

PARSONS-JURDEN CORPORATION

ESTIMATE WORKSHEET

PJ348-DONLYN PRINTED IN U.S.A.

M.T.O. BY JME

DATE March 71 SHEET ____ OF ____ PRICED BY ____

JOB NO.: 4832-01 CLIENT: NEWMONT EXP. LTD

TYPE OF ESTIMATE

CKD. BY C

PROJECT: VERDE HILL

COUNT NO.			QUANTITY	UNIT	COST UNIT MATERIAL	COST UNIT LABOR	MATERIALS AND EXPENSE	SUB CONTRACTS	LABOR	TOTAL COST
	CONSTRUCTION MANAGER	(1)	* 22	MO		2100			46200	
	GENERAL SUPT	(1)	* 20	"		1800			36000	
	ASSISTANT GENERAL SUPT (3-1 EA AREA)		* 44	"		1600			70400	
	MASTER MECHANIC	(1)	* 20	"		1300			26000	
	CRAFT SUPT	(0)	—			—			—	
	CHIEF FIELD ENGR	(1)	* 21	"		1600			33600	
	OFFICE ENGR (RESIDENT ENGR)	(1)	* 20	"		1700			34000	
	SURVEYOR WITH MEN	(3)	33	"		850			28050	
	RODMEN	(6)	66	"		800			52800	
	OFFICE CLERK	(3)	54	"		650			35100	
	COST CONTROL	(1)	* 20	"		1350			27000	
	SCHEDULING	(1)	* 16	"		1100			17600	
	STENOGRAPHIC-CLERICAL	(3)	36	"		600			21600	
	TYPIST CLERK	(4)	72	"		600			43200	
	PURCHASING AGENT	(1)	18	"		1200			21600	
	CHIEF WAREHOUSEMAN	(1)	* 18	"		1100			19800	
	EXPEDITER	(0)	—			—			—	
	SAFETY & FIRST AID	(1)	18	"		1100			19800	
	WAREHOUSE & TRUCK DRIVERS	(3)	45	"		1150			51750	
	OFFICE MANAGER	(1)	* 22	"		1500			33000	
	PAYMASTER	(1)	20	"		1000			20000	
	TIME KEEPER CHECKER	(3)	42	"		800			33600	
	ELECTRICAL ENGINEER	(1)	* 20	"		1400			28000	
	AREA ENGINEERS	(3)	* 44	"		1400			61600	
	CHIEF OF PARTIES	(1)	* 18	"		1000			18000	
	ACCOUNTANT	(2)	36	"		1200			43200	
	MATERIAL CONTROL ENGINEER	(1)	* 20	"		1300			26000	
	PRINT CONTROL	(1)	18	"		800			14400	
	TOTAL FIELD CREW WAGES								862300	862300

SHEET NO. 1 of 8

PARSONS-JURDEN CORPORATION ESTIMATE WORKSHEET

PJ348-DONLYN PRINTED IN U.S.A.

M.T.O. BY THE

DATE 3-71 SHEET ___ OF ___ PRICED BY ___

JOB NO.: 4832-01 CLIENT: N E L TYPE OF ESTIMATE CKD. BY

PROJECT: FIELD TRAVEL EXPENSES & SUBSISTENCE

ACCOUNT NO.		QUANTITY	UNIT	COST UNIT MATERIAL	COST UNIT LABOR	MATERIALS AND EXPENSE	SUB CONTRACTS	LABOR	TOTAL COST
	GENERAL FIELD SUPT. & RES. CONST. MGR (2)					2000			
	SUPERINTENDENTS (AREA) (3)					3000			
	OFFICE MANAGER (1)					1000			
	ELECTRICAL ENGINEER (1)					1000			
	FIELD & OFFICE ENGR'S. (4)					4000			
	MASTER MECHANIC (1)					1000			
	ESTIMATING ENG.	—				—			
	COST CONTROL & SCHEDULING (2)					2000			
	SAFETY & FIRST AID	—				—			
	MAT'L CONTROL ENG, BUYER, WHSE (3)					3000			
	SURVEYORS	—				—			
	RESIDENT ENGINEER (1)					1000			
	ACCOUNTING & PURCHASING	—				—			
	EXPEDITING	—				—			
	MOVE IN & OUT - EMPLOYEES (18)					36000			
	SUBSISTENCE (325 MOS @ $210)					68250			
	(ALL PERSONNEL MARKED WITH ASTERISK)								
	SUBSISTENCE TRUCK DRIVERS (45 MO @ 210)					9450			
	TOTAL					131700			131700

SHEET NO. 170

PARSONS-JURDEN CORPORATION

ESTIMATE WORKSHEET

FJ348-DONLYN PRINTED IN U.S.A.

M.T.O. BY CH

DATE 3-71 SHEET ___ OF ___ PRICED BY ___

JOB NO.: 4832-01 CLIENT: NEL

TYPE OF ESTIMATE

CKD. BY C

PROJECT: CONSTRUCTION - FIELD CREW - OFFICE SUPPLIES

ACCOUNT NO.		QUANTITY	UNIT	COST UNIT MATERIAL	COST UNIT LABOR	MATERIALS AND EXPENSE	SUB CONTRACTS	LABOR	TOTAL COST
	DESKS & CHAIRS	18	EA	200		3600			
	DRAFTING TABLES	2	"	160		320			
	DRAFTING MACHINES	2	"	200		400			
	BOOK CASES	5	"	50		250			
	MISC. CHAIRS	20	"	30		600			
	COAT RACKS, WASTE PAPER BASKETS ETC.		LOT			400			
	DRAFTING SUPPLIES		"			1000			
	MISC. OFFICE SUPPLIES		"			15000			
	STATIONARY, PAPER, FORMS		"			15000			
	CALCULATORS	4	EA	800		3200			
	ADDING MACHINES	6	"	300		1800			
	TRANSITS	4	"	500		2000			
	LEVELS	4	"	300		1200			
	TAPES, RODS, POLES, STAKES		LOT			800			
	TIME SLIPS, PAYROLL CHECKS		LOT			5000			
	CHECK PRINTER	1	EA	200		200			
	TYPEWRITERS	4	"	250		1000			
	FILE CABINETS	15	"	80		1200			
	PLAN FILE	4	"	200		800			
	BLUE PRINT MACHINE	1	"	3500		3500			
	" " PAPER		LOT			3500			
	COPYING MACHINE (XEROX OR EQUAL)	1	EA	2500		2500			
	" PAPER		LOT			5000			
	FIRST AID & SAFETY SUPPLIES		LOT			4000			
	PHOTOGRAPHING		LOT			1000			
	ADJUST					730			
	TOTAL					74000			74000

SHEET NO. 171

PARSONS-JURDEN CORPORATION

ESTIMATE WORKSHEET

PJ34B-DONLYN. PRINTED IN U.S.A.

M.T.O. BY CH

DATE 3-71 SHEET ____ OF ____ PRICED BY ____

JOB NO.: 4832-01 CLIENT: N.E.L TYPE OF ESTIMATE CKD. BY C

PROJECT: CONSTRUCTION - FIELD CREW - COMMUNICATIONS

ACCOUNT NO.		QUANTITY	UNIT	COST UNIT MATERIAL	COST UNIT LABOR	MATERIALS AND EXPENSE	SUB CONTRACTS	LABOR	TOTAL COST
	TELEPHONE - LONG DIST. & LOCAL	20	MO	1200		24000			
	POSTAGE	20	MO	400		8000			
	MOBILE RADIO - 10 STATIONS		LOT			10000			
	TELEX - INSTALLATION		LOT			180			
	MONTHLY RENTAL	20	MO	60		1200			
	MONTHLY USAGE (EST)	20	MO	60		1200			
	TOTAL					44560			44560

SHEET NO. 172

PARSONS-JURDEN CORPORATION

ESTIMATE WORKSHEET

PJ348-DONLYN PRINTED IN U.S.A.

DATE 3-71 SHEET ____ OF ____ M.T.O. BY J.H.E. PRICED BY ____

JOB NO.: 4832-01 CLIENT: N.E.C. TYPE OF ESTIMATE CKD. BY

PROJECT: TEMPORARY FACILITIES

ACCOUNT NO.		QUANTITY	UNIT	COST UNIT MATERIAL	COST UNIT LABOR	MATERIALS AND EXPENSE	SUB CONTRACTS	LABOR	TOTAL COST
	FIELD OFFICE	2500	SF	10.00			25000		25000
	WARE HOUSE		USE PERMANENT WAREHOUSE						—
	LABORER'S CHANGE HOUSE - 25'x50'	1250	SF	8.00			10000		10000
	CARPENTER'S -DO-	1250	"	8.00			10000		10000
	IRON WORKER'S -DO-	1250	"	8.00			10000		10000
	MILLWRIGHT'S -DO-	1250	"	8.00			10000		10000
	PIPE FITTER'S -DO-	1250	"	8.00			10000		10000
	OPERATOR'S -DO-	1250	"	8.00			10000		10000
	EQUIPMENT REPAIR & SERVICE FACILITIES		LOT	USE PERMANENT SHOP					—
	TEMPORARY SHOPS & FIELD SHEDS		LOT				40000		40000
	OUTSIDE FENCED STORAGE AREA - 200'x 200' 800' FENCE @ + 40,000 SF GRADING @		LOT				15000		15000
	TOOL ROOMS - 3 x 25x30	2250	SF	6.00			13500		13500
	SIGNS, TEMP. FENCE, BARRICADES ETC		LOT				5000		5000
	TOTAL THIS SHEET						158500		158500

SHEET NO. 173

PARSONS-JURDEN CORPORATION

ESTIMATE WORKSHEET

PJ34B-DONLYN PRINTED IN U.S.A.

DATE 3-71 SHEET ____ OF ____

M.T.O. BY J.H.E

PRICED BY ____

JOB NO.: 4832-01 CLIENT: N.E.L.

TYPE OF ESTIMATE

CKD. BY e

PROJECT: TEMPORARY FACILITIES (CONT.)

ACCOUNT NO.		QUANTITY	UNIT	COST UNIT MATERIAL	COST UNIT LABOR	MATERIALS AND EXPENSE	SUB CONTRACTS	LABOR	TOTAL COST
	DIESEL & GAS PUMPS & STORAGE		ASSUME	PROVIDED	BY	MINE			
	TEMPORARY ROADS & CULVERTS & PARKING		LOT			6000		9000	15000
	MOVE IN, MOVE OUT		"			5000		5000	10000
	MTL. FOR SCAFFOLDING, CRIBBING, SHORING.		"			15000		5000	20000
	WELDER QUALIFICATION (100 @ $75.-)	100	EA	25	50.-	2500		5000	7500
	WAREHOUSING - TOTAL OF 80 MAN MOS.	13600	HR		8.00			108800	108800
	SUBSISTENCE FOR ABOVE (80 MO @ 210)					16800			16800
	MATERIALS TESTING LAB.					25000			25000
	CLEAN UP	10000	HR		6.00			60000	60000
	SUBSISTENCE FOR ABOVE (10000 HR @ 1.25)					12500			12500
	TOTAL THIS SHEET					82800		192800	275600
	BROUGHT FORWARD						158500		158500
	TOTAL TEMPORARY FACILITIES					82800	158500	192800	434100

SHEET NO. 174

PARSONS-JURDEN CORPORATION

ESTIMATE WORKSHEET

PJ34B-DONLYN PRINTED IN U.S.A.

DATE 3-71 SHEET ____ OF ____ M.T.O. BY J.H.E PRICED BY ____

JOB NO.: 4832-01 CLIENT: NEL TYPE OF ESTIMATE CKD. BY C

PROJECT: UTILITIES

COUNT NO.		QUANTITY	UNIT	COST UNIT MATERIAL	COST UNIT LABOR	MATERIALS AND EXPENSE	SUB CONTRACTS	LABOR	TOTAL COST
	POTABLE WATER - CONSTRUCTION ONLY		LOT			15000		20000	35000
	SANITARY SERVICE - 40 EA x 20 x $ 30/Mo	800	Mo	30.		24000			24000
	FIRE PROTECTION (EXTINGUISHERS)		LOT			5000			5000
	HEAT, LIGHT, AIR CONDITIONING		LOT			10000			10000
	TEMP. POWER WIRING					25000	25000		50000
	TOTAL UTILITIES					79000	25000	20000	124000

214

PARSONS-JURDEN CORPORATION

ESTIMATE WORKSHEET

M.T.O. BY O.H

PJ34B-CONLYN PRINTED IN U.S.A.

DATE 3-71 SHEET ____ OF ____ PRICED BY ____

JOB NO.: 4832-01 CLIENT: N.E.L

TYPE OF ESTIMATE

CKD. BY e

PROJECT: WATCH MEN

ACCOUNT NO.		QUANTITY	UNIT	COST/UNIT MATERIAL	COST/UNIT LABOR	MATERIALS AND EXPENSE	SUB CONTRACTS	LABOR	TOTAL COST
	$\frac{21 \text{ SHIFTS}}{5} \times 2 = 8$ WATCHMEN								
	21x8x2 = 336 HRS/WK x 87 WKS ($2.68/HOUR)	87	WKS	900				78300	78300
	TOTAL							78300	78300

SHEET NO. 176

PARSONS-JURDEN CORPORATION

ESTIMATE WORKSHEET

PJ34B-DONLYN PRINTED IN U.S.A.

DATE 3-71 SHEET ____ OF ____

M.T.O. BY J.N.E

PRICED BY ____

JOB NO.: 4232-01 CLIENT: N.E.L

TYPE OF ESTIMATE

CKD. BY C

PROJECT: GENERAL USE EQUIPMENT

COUNT NO.			QUANTITY	UNIT	COST UNIT MATERIAL	COST UNIT LABOR	MATERIALS AND EXPENSE	SUB CONTRACTS	LABOR	TOTAL COST
	2½ cy CRAWLER SHOVEL	(2)	12	Mo	—	—	—			—
	20 TON TRUCK	(8)	48	Mo	900		43200			43200
	WAGON DRILLS	(2)	8	Mo	300		2400			2400
	BULLDOZER (D-8)	(6)	60	Mo	3500		210000			210000
	SELF-PROPELLED SCRAPER	(6)	72	Mo	4000		288000			288000
	GRADER (125 HP)	(2)	24	Mo	1000		24000			24000
	FRONT END LOADER (CAT 955)	(2)	24	Mo	1500		36000			36000
	BACKHOE	(2)	24	Mo	2000		48000			48000
	GRADALL	(2)	30		2500		75000			75000
	CLAMSHELL				—	—	—			—
	SHEEPSFOOT ROLLER	(2)	12	Mo	500		6000			6000
	PNEUMATIC ROCK DRILLS	(6)	40	Mo	65		2600			2600
	GAS ~~AIR~~ POWERED TAMPERS	(6)	50	Mo	200		10000			10000
	365 ~~250~~ CFM AIR COMPRESSORS	(6)	90	Mo	600		54000			54000
	CONCRETE BUCKETS	(2)	20	Mo	30		600			600
							TOTAL THIS PAGE			799800

SHEET NO. 177

PARSONS-JURDEN CORPORATION

ESTIMATE WORKSHEET

PJ348-DONLYN PRINTED IN U.S.A.

DATE 3-71 SHEET ____ OF ____ M.T.O. BY TNE PRICED BY ____

JOB NO.: 4832-01 CLIENT: N.E.C. TYPE OF ESTIMATE CKD. BY E

PROJECT: GENERAL USE EQUIPMENT (CONT'D.)

ACCOUNT NO.			QUANTITY	UNIT	COST UNIT MATERIAL	COST UNIT LABOR	MATERIALS AND EXPENSE	SUB CONTRACTS	LABOR	TOTAL COST
							BROUGHT FORWARD			199800
	FLOOR FINISHER	(2)	10	Mo	125		1250			1250
	SUBMERSIBLE PUMPS	(3)	40	Mo	100		4000			4000
	CONCRETE VIBRATORS (AIR)	(6)	48	Mo	100		4800			4800
	CONCRETE CARTS - GAS OP	(8)	64	Mo	—		—			—
	10 ~~20~~T CRANES (HYDRAULIC)	(2)	36	Mo	1500		54000			54000
	60T CRANES (MOBILE)	(3)	45	Mo	3500		157500			157500
	120T CRANES (MOBILE)	(1)	6	Mo	5000		30000			30000
	AIR HOISTS (PURCHASED)		4	EA	INCL. IN		SMALL TOOLS			
	TRUCK MOUNTED HYDRAULIC CRANE - MT	(2)	30	MO	—		—			—
	300 AMP WELDER (PURCHASE) (GAS)		4	EA	1800		7200			7200
	300 AMP. WELDERS (PURCHASED) (ELECT)		30	EA	700		21000			21000
	10 KW GENERATOR	"	1	EA	1700		1700			1700
	STATION WAGONS	"	3	EA	3000		9000			9000
	WATER TRUCK	"	1	EA	7000		7000			7000
	PICK-UP TRUCKS	"	12	EA	2500		30000			30000
	AMBULANCE	"	1	EA	USE 1 STATION WAGON ABOVE					
	LOW BOY INCL TRACTOR (RENT)	(1)	8	Mo	1200		9600			9600
	FORK LIFT TRUCKS (RENT)	(2)	32	Mo	500		16000			16000
	FLAT BED TRUCKS	"	4	EA	7000		28000			28000
	RADIAL SAWS, ROD BENDING & SHEARING PIPE THREADING, POWER HACK SAWS ETC						25000			25000
								SUB-TOTAL		1205800
	SHORT TERM MISC RENTALS									74150
					TOTAL GENERAL USE EQUIPMENT					1300000

SHEET NO. 178

211

PARSONS-JURDEN CORPORATION

ESTIMATE WORKSHEET

PJ34B-DONLYN PRINTED IN U.S.A.

M.T.O. BY D.A.

DATE 3-71 SHEET ____ OF ____ PRICED BY ____

JOB NO.: 4832-01 CLIENT: NEL

TYPE OF ESTIMATE

CKD. BY e

PROJECT: GENERAL USE EQUIPMENT - GAS, OIL, REPAIRS

COUNT NO.		QUANTITY	UNIT	COST UNIT MATERIAL	COST UNIT LABOR	MATERIALS AND EXPENSE	SUB CONTRACTS	LABOR	TOTAL COST
	GASOLINE, DIESEL OIL, LUBRICANTS		LOT			130000			130000
	REPAIR PARTS, TIRES, ETC.		LOT			200000			200000
	REPAIR LABOR		LOT					120000	120000
	TOTAL					330000		120000	450000

SHEET NO. 179

218

PARSONS-JURDEN CORPORATION

ESTIMATE WORKSHEET

U34B-DONLYN PRINTED IN U.S.A.

M.T.O. BY D. H.

DATE 3-71 SHEET ____ OF ____ PRICED BY ____

JOB NO.: 4832-01 CLIENT: N.E.C.

TYPE OF ESTIMATE

CKD. BY L.G.

PROJECT: CONSTRUCTION SUPPLIES

COUNT NO.		QUANTITY	UNIT	COST UNIT MATERIAL	COST UNIT LABOR	MATERIALS AND EXPENSE	SUB CONTRACTS	LABOR	TOTAL COST
	SMALL TOOLS - 4% OF TOTAL DIRECT LABOR ($6827000)					273000			273000
	GENERAL EXPENDABLE CONST. SUPPLIES 5.5% OF TOTAL DIRECT LABOR ($6827000)					375000			375000
	TOTAL CONST. SUPPLIES					648000			648000

SHEET NO. 180

PARSONS-JURDEN CORPORATION

ESTIMATE WORKSHEET

PJ34B-DONLYN PRINTED IN U.S.A.

M.T.O. BY D.F.

DATE 3-71 SHEET ____ OF ____ PRICED BY ____

JOB NO.: 4232-01 CLIENT: N.E.C. TYPE OF ESTIMATE CKD. BY L.G.

PROJECT: START-UP COSTS

COUNT NO.		QUANTITY	UNIT	COST UNIT MATERIAL	COST UNIT LABOR	MATERIALS AND EXPENSE	SUB CONTRACTS	LABOR	TOTAL COST
	SAN MANUEL EXPANSION WAS 2.6% OF T.D.L.								
	MISSION PLANT WAS 1.9% OF T.D.L.								
	USE 2.4% OF T.D.L. ($6827 000)					164000			164000
	TOTAL START-UP COSTS					164000			164000

SHEET NO. 181

220

PARSONS-JURDEN CORPORATION

ESTIMATE WORKSHEET

M.T.O. BY OH

PJ-DB-DONLYN PRINTED IN U.S.A.

DATE 3-71 SHEET ____ OF ____ PRICED BY ____

JOB NO.: 4832-01 CLIENT: N.E.L

TYPE OF ESTIMATE

CKD. BY [illegible]

PROJECT: LABOR TAXES

COUNT NO.		QUANTITY	UNIT	COST UNIT MATERIAL	COST UNIT LABOR	MATERIALS AND EXPENSE	SUB CONTRACTS	LABOR	TOTAL COST
	TOTAL DIRECT LABOR $ 6 827 200								
	FIELD CREW WAGES 862,300								
	TEMP. FACILITIES 192,800								
	UTILITIES 20 000								
	WATCHMEN 78,300								
	CONST EQPMT REPAIR 120,000								
	TOTAL LABOR $ 8100600								
	WORKMAN'S COMP. 6.5%								
	STATE & FEDERAL UNEMPLOYMENT 4.2% } 15.9% OF $ 8 100 600					1288000			
	F.I.C.A (INCL. MEDICARE) 5.2%								
	FIELD CREW (EXCEPT DRIVERS) $ 810,500								
	ADD'L BENEFITS & FRINGES 12%					97 300			
	TOTAL LABOR TAXES					1385300			1385300

SHEET NO. 182

PARSONS-JURDEN CORPORATION

ESTIMATE WORKSHEET

M.T.O. BY O.H.

PJ34B-DONLYN PRINTED IN U.S.A.

DATE 3-71 SHEET ____ OF ____ PRICED BY ____

JOB NO.: 4832-01 CLIENT: N.E.L. TYPE OF ESTIMATE CKD. BY

PROJECT: CRAFT BENEFITS, TRAVEL & SUBSISTENCE

ACCOUNT NO.		QUANTITY	UNIT	COST UNIT MATERIAL	COST UNIT LABOR	MATERIALS AND EXPENSE	SUB CONTRACTS	LABOR	TOTAL COST
	EXCAVATION - H.&W., PENSION, APP. TRAINING, VAC	276000	HR		.98			270500	
	TRAVEL & TRAVEL TIME	475	R.T.	100.-		47500			
	SUBSISTENCE	276000	HR	1.25		345000			
	CONCRETE - H.&W., PENSION, APP. TRG., VACAT.	214000	HR		.95			203300	
	TRAVEL & TRAVEL TIME	180	R.T.	100.-		18000			
	SUBSISTENCE	214000	HR	1.61		344500			
	BUILDINGS - H.&W., PENSION, APP. TRG., VACAT.	144,000	HR		.92			132500	
	TRAVEL & TRAVEL TIME	120	R.T.	100.-		12000			
	SUBSISTENCE	144,000	HR	1.45		208800			
	EQUIPMENT - H&W, PENSION, APP. TRG., VACAT.	105,000	HR		1.16			121800	
	TRAVEL & TRAVEL TIME	90	R.T.	100.-		9000			
	SUBSISTENCE	105,000	HR	1.57		164900			
	PIPING - H&W PENSION, APP. TRG, VACAT	151,000	HR		1.18			178300	
	TRAVEL & TRAVEL TIME	125	R.T.	100.-		12500			
	SUBSISTENCE	151,000	HR	1.38		208400			
	ELECTRICAL - TRAVEL & TRAVEL TIME	77	R.T.	100.-		7700			
	PAINTING - H&W, PENSION, APP. TRG, VACAT.	16,000	HR		.30			4800	
	TRAVEL & TRAVEL TIME	15	R.T.	100.-		1500			
	SUBSISTENCE	16,000	HR	1.25		20000			
	INSTRUMENTATION, TRAVEL & TRAVEL TIME	8	R.T.	100.-		800			
	ANNUAL 1.R.T. PER 1200 M.H.								
	TOTAL CRAFT BENEFITS					1400600		911200	2311800

SHEET NO. 183

PARSONS-JURDEN CORPORATION

ESTIMATE WORKSHEET

PJ34B-DONLYN PRINTED IN U.S.A.

DATE 3-71 SHEET ____ OF ____

M.T.O. BY ____
PRICED BY ____

JOB NO.: 4832-01 CLIENT: NEL

TYPE OF ESTIMATE

CKD. BY

PROJECT: VERDE HILLS

COUNT NO.		QUANTITY	UNIT	COST UNIT MATERIAL	COST UNIT LABOR	MATERIALS AND EXPENSE	SUB CONTRACTS	LABOR	TOTAL COST
	ENGINEERING								
	HOME OFFICE COSTS (EXCL. FEE)					3700000			
	OUTSIDE CONSULTANTS (SOIL & WATER)					70000			
	PREDESIGN ESTIMATES					50000			
	ESTIMATE REVIEW					80000			
	TOTAL ENGINEERING					3900000			3900000

SHEET NO. 184/186

PARSONS-JURDEN CORPORATION

ESTIMATE WORKSHEET

PJ34B-DONLYN PRINTED IN U.S.A.

DATE 3-71 SHEET ____ OF ____

M.T.O. BY OM

PRICED BY ____

JOB NO.: 4832-01 CLIENT: N.E.L.

TYPE OF ESTIMATE

CKD. BY

PROJECT: SALES TAX

ACCOUNT NO.		QUANTITY	UNIT	COST UNIT MATERIAL	COST UNIT LABOR	MATERIALS AND EXPENSE	SUB CONTRACTS	LABOR	TOTAL COST
	SALES TAX APPLIES TO CONTRACTOR FURNISHED EQUIPMENT ONLY. NEWMONT PURCHASES ARE TAX EXEMPT.								
	OFFICE SUPPLIES					74 000			
	TEMP. FACILITIES (MTL ONLY)					160 000			
	UTILITIES (MTL ONLY)					79 000			
	GENERAL USE EQUIPMENT					300 000			
	REPAIR PARTS & FUEL					330 000			
	CONSTRUCTION SUPPLIES & SMALL TOOLS					649 000			
	LUMBER, NAILS, TIES FOR FORM WORK					80 000			
	OTHER MISC. CONTRACTOR PURCHASES					200 000			
	SALES TAX 3% OF					$ 1871 000			
						= 56 000			
	TOTAL SALES TAX					56 000			56 000

SHEET NO. 187

ARSONS-JURDEN CORPORATION

ESTIMATE WORKSHEET

J34B-DONLYN PRINTED IN U.S.A.

DATE 3-71 SHEET ____ OF ____

M.T.O. BY ____
PRICED BY ____
CKD. BY ____

TYPE OF ESTIMATE

JOB NO.: 4832-01 CLIENT: N.E.L

PROJECT: VEKOL HILLS

COUNT NO.		QUANTITY	UNIT	COST UNIT MATERIAL	COST UNIT LABOR	MATERIALS AND EXPENSE	SUB CONTRACTS	LABOR	TOTAL COST
	EXCAVATION								
	CRAFT LABOR								
	TOTAL DIRECT LABOR $6827200								
	" ELEC. & INST. " 1236000								
	" INDIRECT " 462900								
	" FRINGES (EXCL. TRAVEL) 941100								
	" TAXES 1288000								
	TOTAL CRAFT LABOR $10725200								
	1/1/72 - 6/1/72 20% OF $10725200		NO	EXCAVATION					
	6/1/72 - 6/1/73 6.5% OF 10725200		AT	11%	"	11% OF $6971400			766900
	6/1/73 - 9/1/73 N% OF 10725200		AT	23%	"	23% OF $1608800			370000
	FIELD SUPERVISION (EXCAVATION)								
	FIELD SUPERVISION $810,600								
	ADD'L BENEFITS 97,200								
	TOTAL SUPERVISION $907,800								
	1/1/72 - 12/31/72 55% OF $907,800	AT	6%	EXCAVATION		6% OF $499,300			30000
	1/1/73 - 9/1/73 45% OF 907,800	AT	11%	"		11% OF $408,500			45000
	SUB TOTAL								1211900

SHEET NO. 102/102

225

PARSONS-JURDEN CORPORATION ESTIMATE WORKSHEET

M.T.O. BY O.H.

PJ34B-DONLYN PRINTED IN U.S.A. DATE 3-71 SHEET ___ OF ___ PRICED BY ___

JOB NO.: 4832-01 CLIENT: N.E.L TYPE OF ESTIMATE CKD. BY

PROJECT:

ACCOUNT NO.		QUANTITY	UNIT	COST/UNIT MATERIAL	COST/UNIT LABOR	MATERIALS AND EXPENSE	SUB CONTRACTS	LABOR	TOTAL COST
	MATERIAL & ENGINEERING ESCALATION								
	DIRECT MATERIAL (EXCL. POWER SUPPLY)								
	9/1/71 - 9/1/72 60% OF $ 15309600			AT 6% ESCALATION			6% OF 9185800		551100
	9/1/72 - 9/1/73 40% OF $ 15309600			AT 11% "			11% OF 6123800		673600
	INDIRECT MATERIALS (INCL. SALES TAX)								
	9/1/71 - 9/1/72 75% OF $ 2775300			AT 6% ESCALATION			6% OF 2081500		124900
	9/1/72 - 9/1/73 25% OF $ 2775300			AT 11% "			11% OF 693800		76300
	ENGINEERING								
	4/1/71 - 4/1/72 60% OF $ 3900,000			AT 6% ESCALATION			6% OF 2340000		140400
	4/1/72 - 4/1/73 30% OF $ 3900,000			AT 11% "			11% OF 1170000		128700
	4/1/73 - 9/1/73 10% OF $ 3900,000			AT 17% "			17% OF 390000		66300
	TOTAL THIS PAGE								1761300
	" PRECEDING "								1211900
	ADJOINT								
	TOTAL ESCALATION								2973200

SHEET NO. 190

226

PARSONS BRINCKERHOFF CORPORATION — ESTIMATE WORKSHEET

PJ34B-DONLYN PRINTED IN U.S.A.

DATE 3-72 SHEET ____ OF ____ M.T.O. BY ____ PRICED BY ____

JOB NO.: 4832-01 CLIENT: NEL TYPE OF ESTIMATE CKD. BY

PROJECT: INSURANCE - NON LABOR

COUNT NO.		QUANTITY	UNIT	COST UNIT MATERIAL	COST UNIT LABOR	MATERIALS AND EXPENSE	SUB CONTRACTS	LABOR	TOTAL COST
	BODILY INJURY & PROPERTY DAMAGE LIABILITY INSURANCE INCLUDING AUTOMOTIVE								
	CRAFT LABOR & STAFF 1% OF $8100600					81000			81000
	BUILDERS ALL RISK					99000			99000
	TOTAL INSURANCE					180000			180000

SHEET NO. 191

SECTION 6

DRAWINGS

Number	Title
4832-01-1	Copper Plant Flowsheet
4832-01-2	Moly Plant Flowsheet
4832-01-3	Copper and Moly Plant Reagent Flowsheet
4832-01-4	Molybdenum Plant and Reagent Facilities General Arrangement Plan and Sections

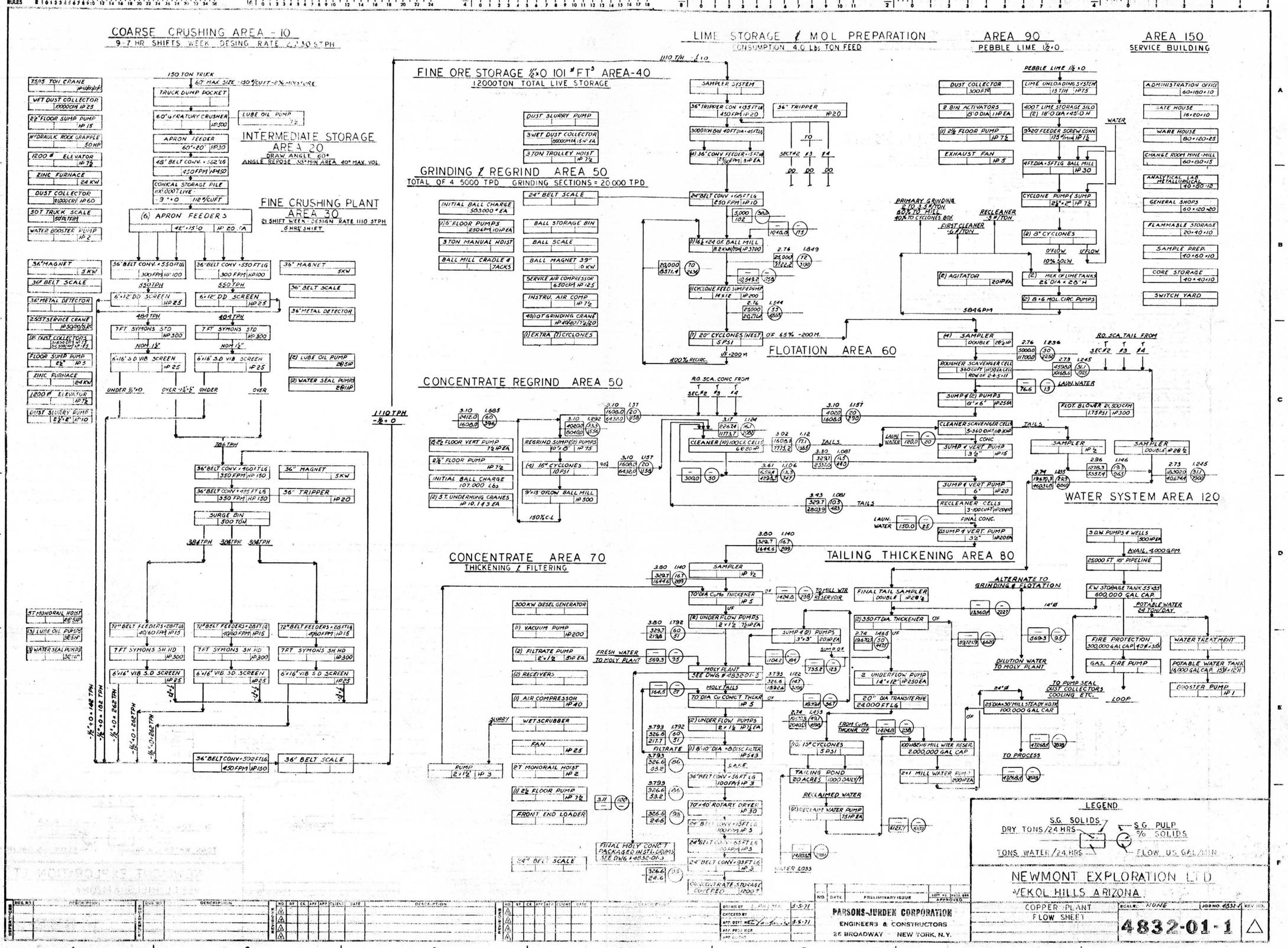
COARSE CRUSHING AREA - 10
9-7 HR. SHIFTS WEEK DESING RATE 2230 STPH
150 TON TRUCK
60" MAX. SIZE - 130 #/CUFT - 2% MOISTURE
TRUCK DUMP POCKET
60" GYRATORY CRUSHER
LUBE OIL PUMP
APRON FEEDER
48" BELT CONV. - 562' LG
450 FPM
CONICAL STORAGE PILE
(6) APRON FEEDERS
INTERMEDIATE STORAGE
AREA 20
DRAW ANGLE 60°
ANGLE REPOSE 35° MIN AREA 40° MAX. VOL.
FINE CRUSHING PLANT
AREA 30
21 SHIFT WEEK - DESIGN RATE 1110 STPH
6 HRS/SHIFT
36" BELT CONV. - 550 FT LG
300 FPM
550 TPH
6'x12' DD SCREEN
484 TPH
7 FT SYMONS STD
NOM 1½"
6'x16' 3.D VIB SCREEN
UNDER ½"x0
OVER ½"x½"
UNDER
OVER
36" MAGNET
36" BELT SCALE
36" METAL DETECTOR
(2) LUBE OIL PUMP
(2) WATER SEAL PUMP
1110 TPH
-½"x0
36" BELT CONV. - 460 FT LG
350 FPM
36" BELT CONV. - 495 FT LG
SURGE BIN
500 TON
384 TPH
72" BELT FEEDERS - 28 FT LG
40/60 FPM
7 FT SYMONS SH HD
6'x16' VIB 3.D SCREEN
36" BELT CONV. - 502 FT LG
450 FPM
36" BELT SCALE
FINE ORE STORAGE ½"x0 101 #/FT³ AREA-40
12000 TON TOTAL LIVE STORAGE
DUST SLURRY PUMP
3 WET DUST COLLECTOR
3 TON TROLLEY HOIST
GRINDING & REGRIND AREA 50
TOTAL OF 4 5000 TPD GRINDING SECTIONS = 20,000 TPD
INITIAL BALL CHARGE
2½" FLOOR PUMPS
3 TON MANUAL HOIST
BALL MILL CRADLE & JACKS
24" BELT SCALE
BALL STORAGE BIN
BALL SCALE
BALL MAGNET 39"
SERVICE AIR COMPRESSOR
INSTRU. AIR COMP
40/10T GRINDING CRANE
(1) EXTRA (7) CYCLONES
LIME STORAGE & MOL PREPARATION
CONSUMPTION 4.0 Lbs TON FEED
SAMPLER SYSTEM
36" TRIPPER CON. - 135 FT LG
450 FPM
3000 TON BIN 40 FT DIA - 65 FT LG
(4) 36" CONV FEEDER - 15 FT LG
36" TRIPPER
24" BELT CONV. - 164 FT LG
250 FPM
11½'x24' OF BALL MILL
11.2 KWH/TON
(1) CYCLONE FEED SUMP & PUMP
(7) 20" CYCLONES (NEST OF 65% -200 M.
400% RECIRC.
FLOTATION AREA 60
CONCENTRATE REGRIND AREA 50
R.O. SCA. CONC FROM
REGRIND SUMP (2) PUMPS
(4) 16" CYCLONES
9'x18' OFLOW BALL MILL
150% C.L.
CLEANER (10) 100 CU. FT. CELLS
TAILS
CONC
SUMP & VERT. PUMP
RECLEANER CELLS
FINAL CONC.
LAUN. WATER
R.O. SCA. TAIL FROM
FLOT. BLOWER 21,500 CFM
WATER SYSTEM AREA 120
AVAIL. 4000 GPM
25000 FT 18" PIPELINE
KW STORAGE TANK
600,000 GAL CAP
POTABLE WATER 24 TON/DAY
FIRE PROTECTION
GAS. FIRE PUMP
WATER TREATMENT
POTABLE WATER TANK
BOOSTER PUMP
TO PUMP SEAL DUST COLLECTORS COOLING ETC.
LOOP
CONCENTRATE AREA 70
THICKENING & FILTERING
300 KW DIESEL GENERATOR
(1) VACUUM PUMP
(2) FILTRATE PUMP
(2) RECEIVERS
(1) AIR COMPRESSOR
WET SCRUBBER
FAN
2T MONORAIL HOIST
(1) 2½ FLOOR PUMP
FRONT END LOADER
PUMP
70' DIA CuMo THICKENER
(2) UNDERFLOW PUMPS
FRESH WATER TO MOLY PLANT
MOLY PLANT
SEE DWG # 4832-01-3
MOLY TAILS
TO DIA Cu CONC'T THCKR
(2) UNDERFLOW PUMPS
FILTRATE
(1) 8'-10' DIA + 0 DISC FILTER
36" BELT CONV. - 36 FT LG
70'x10' ROTARY DRYER
24" BELT CONV. - 15 FT LG
24" BELT CONV. - 65 FT LG
24" BELT CONV. - 93 FT LG
CONCENTRATE STORAGE COVERED
FINAL MOLY CONC'T PACKAGED INST. DRUMS
SEE DWG # 4832-01-3
24" BELT SCALE
TAILING THICKENING AREA 80
FINAL TAIL SAMPLER
(2) 350 FT DIA. THICKENER
ALTERNATE TO GRINDING & FLOTATION
TO MILL WTR RESERVOIR
SUMP & (2) PUMPS
2 UNDERFLOW PUMP
20" DIA TRANSITE PIPE
24,000 FT LG
DILUTION WATER TO MOLY PLANT
FROM CuMo THCKNR OF
(10) 15" CYCLONES
TAILING POND
20 ACRES
1000 DAILY T
RECLAIMED WATER
(2) RECLAIM WATER PUMP
WATER LOSS
100'x182'x16' MILL WTER RESER.
2,000,000 GAL CAP
2+1 MILL WATER PUMP
25' DIA x 30' MILL STEADY HOLD TK
100,000 GAL CAP
TO PROCESS
AREA 90
PEBBLE LIME ½"x0
PEBBLE LIME ½"x0
LIME UNLOADING SYSTEM
400 T LIME STORAGE SILO
(2) 18'-0 DIA x 45'-0 H
3"x20' FEEDER SCREW CONV.
4 FT. DIA x 5 FT LG BALL MILL
CYCLONE PUMP & SUMP
(2) 8" CYCLONES
(2) MILK OF LIME TANKS
(2) 8"x6 MOL. CIRC. PUMPS
DUST COLLECTOR
2 BIN ACTIVATORS
(1) 2½ FLOOR PUMP
EXHAUST FAN
PRIMARY GRINDING 2 TO 3 # /TON
60% TO MILL
40% TO CYCLONES BOX
RECLEANER .3 # /TON
FIRST CLEANER .6 # /TON
(2) AGITATOR
584 GPM
(4) SAMPLER
ROUGHER SCAVENGER CELL
SUMP & (2) PUMPS
CLEANER SCAVENGER CELL
SAMPLER
AREA 150
SERVICE BUILDING
ADMINISTRATION OFFICE
GATE HOUSE
WARE HOUSE
CHANGE ROOM MINE-MILL
ANALYTICAL LAB METALLURGICAL
GENERAL SHOPS
FLAMMABLE STORAGE
SAMPLE PREP.
CORE STORAGE
SWITCH YARD
LEGEND
S.G. SOLIDS
DRY TONS/24 HRS
TONS WATER/24 HRS
S.G. PULP
% SOLIDS
FLOW US GAL/MIN
NEWMONT EXPLORATION LTD
VEKOL HILLS ARIZONA
COPPER PLANT
FLOW SHEET
SCALE: NONE
4832-01-1
PARSONS-JURDEN CORPORATION
ENGINEERS & CONSTRUCTORS
26 BROADWAY NEW YORK, N.Y.

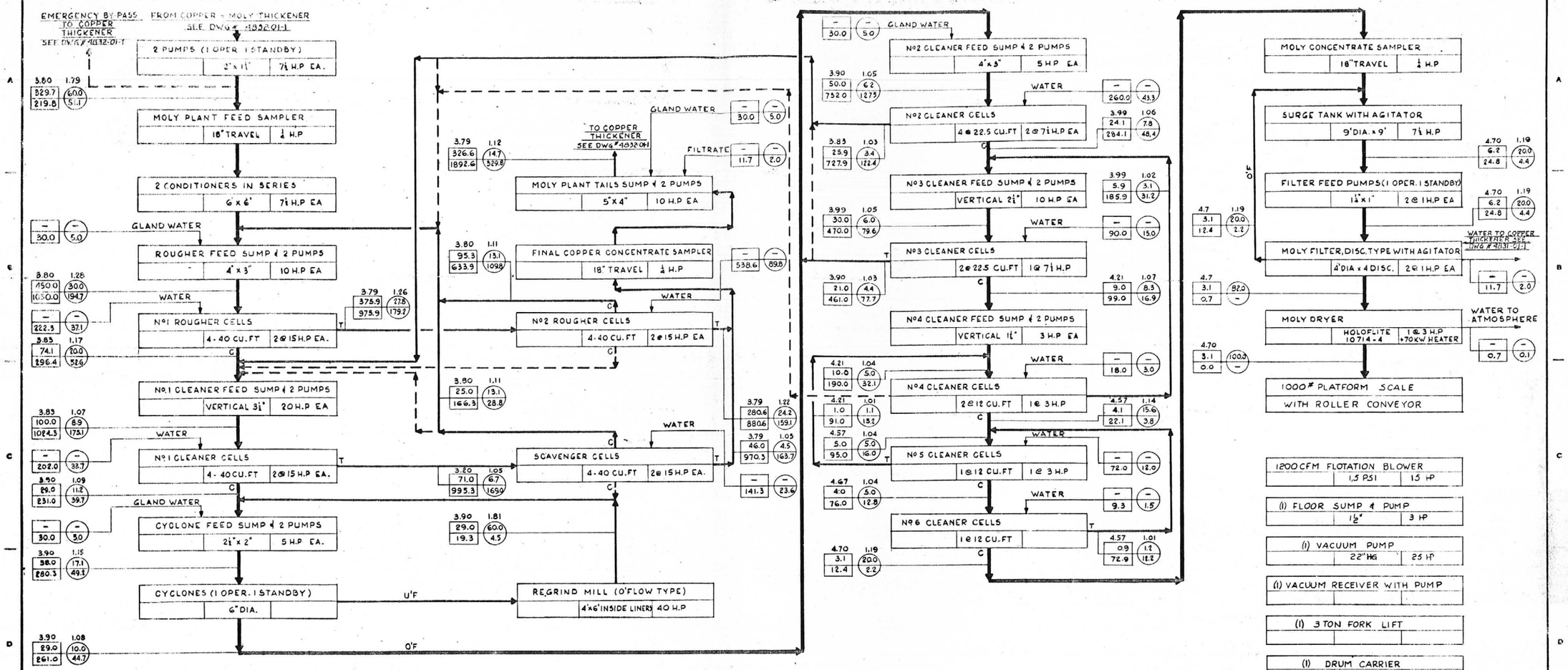

ITEM	NO. REQ.	DESCRIPTION	MAT'L	LOCATION	MARK NO.	DETAILED ON DWG.	FROM

BILL OF MATERIAL

NEWMONT EXPLORATION LTD

VEKOL HILLS PROJECT ARIZONA

MOLY PLANT

FLOW SHEET

SCALE: — JOB NO. 4832.01 REV. NO.

4832-01-2

NO.	DATE	PRELIMINARY ISSUE	DEPT. NO.	PROJ. NO.
			APPROVED	

PARSONS-JURDEN CORPORATION
ENGINEERS & CONSTRUCTORS
26 BROADWAY NEW YORK, N.Y.

DRAWN BY T. KLAASE 9-5-71
CHECKED BY
APP. DEPT. HD. 9-5-71
APP. PROJ. MGR.
APP. CLIENT

REFERENCES DWG. NO.	DESCRIPTION
4832-01-1	MOLY PLANT ARRGT

REFERENCES DWG. NO.	DESCRIPTION

REVISIONS NO.	BY	CK	APP	APP	CLIENT	DATE	DESCRIPTION

REVISIONS NO.	BY	CK	APP	APP	CLIENT	DATE	DESCRIPTION

MOLY PLANT REAGENTS

SODIUM CYANIDE

STORAGE
168 DRUMS
@ 200# EA.

(1) 1340 GAL MIXING TANK
6'DIA × 8'H C.STL
WITH AGITATOR

(1) TRANSFER PUMP

(1) 1340 GAL STORAGE TANK
6'DIA × 8'H C.STL

O'FLOW

(1) TRANSFER PUMP
2 GPM

(1) 50 GAL HEAD TANK
2'DIA × 3'H

(2) FLOWMETERS
Nº1 COND 406ML/MIN
Nº4 CLEANER 3120ML/MIN

→ Nº1 CONDITIONER
→ Nº4 CLEANER

FUEL OIL

DRUMS
55 GAL

(1) BARREL PUMP

(1) 100 GAL STORAGE TANK
3'DIA × 3'H C.STL

(1) TRANSFER PUMP
2 GPM

(1) 50 GAL HEAD TANK
2'DIA × 3'H C.STL

(3) REAGENT FEEDERS
Nº1 RO 39ML/MIN
SCAV 11 ML/MIN

→ ROUGHER #1
→ SCAVENGER
→ SPARE

HYDROGEN PEROXIDE
50%

TANK TRUCK

(1) TRANSFER PUMP
2"

(1) 5000GAL STORAGE TANK
10'DIA × 10'H ALUMIN.

(1) TRANSFER PUMP
S. STL
5 GPM

(1) 500 GAL HOLDING TANK
5'DIA × 5'H ALUMIN.

(1) PROPORTIONING PUMP S. STL
150 ML/MIN.

→ Nº2 CONDITIONING

SODIUM FERROCYANIDE
SP.GR.1.458

STORAGE
256 BAGS
@ 100# EA.

(1) 1025 GAL MIXING TANK
6'DIA × 8'H C.STL
WITH AGITATOR

(1) TRANSFER PUMP
5 GPM

(1) 1025 GAL STORAGE TANK
6'DIA × 8'H C. STL

O'FLOW

(1) TRANSFER PUMP
2 GPM

(1) 50 GAL HEAD TANK
2'DIA × 3'H C.STL

(3) FLOWMETERS
Nº1 RO 2183ML/MIN
SCAV. 250 ML/MIN

→ ROUGHER
→ Nº1 CLEANER
→ SCAVENGER

POTASSIUM FERRICYANIDE
SP.GR.1.894

STORAGE
31 BAGS
@ 100# EA

(1) 200 GAL MIXING TANK
3'DIA × 4'H C.STL.
WITH AGITATOR

(1) TRANSFER PUMP
2 GPM

(1) 200 GAL STORAGE TANK
3'DIA × 4'H C. STL.

(1) TRANSFER PUMP
2 GPM

(1) 50 GAL HEAD TANK
2'DIA × 3'H

(3) FEEDERS
177 ML/MIN EA.

→ Nº2 CLEANER
→ Nº3 CLEANER
→ SPARE

SODIUM HYPOCHLORITE

50% CAUSTIC SODA (76% Na2O BASIS) | POTABLE WATER | LIQUID CHLORINE

TANK TRUCKS

(1) TRANSFER PUMP
50 GPM

(1) 13000 GAL STORAGE TANK
13'DIA × 15'H
P.V.C. LINED

(1) PROPORTIONING PUMP

TANK TRUCK
100 PSI

HEAT EXCHANGER

(1) METERING VALVE

(1) METERING VALVE

MIXING TANK
8" DIA. × 30'-0" LG
WITH PERFORATED
SILVER TUBING FORCE
1.75% SODIUM
HYPOCHLORITE SOL'N

(1) 13000 GAL STORAGE TANK
13'DIA × 15'H
P.V.C. LINED

(1) TRANSFER PUMP
S. STL

(1) 500 GAL HOLDING TANK
3'DIA × 3'H
P.V.C. LINED

(1) PROPORTIONING PUMP
49.30 ML/MIN

→ Nº2 CLEANER

SULPHURIC ACID
66° BAUME 93% SP.GR. 1.835

TANK TRUCKS
10 TON

(1) TRANSFER PUMP
2"

(1) 2000 GAL STORAGE TANK
6'DIA × 8'H
HEAVY STL

(1) TRANSFER PUMP
5 GPM

(1) 500 GAL HOLDING TANK
3'DIA × 5'H
HEAVY STL

(1) TRANSFER PUMP
5 GPM

(1) 50 GAL HEAD TANK
2'DIA × 3'H
HEAVY STL

(6) PROPORTIONING PUMPS
8 TO 67 ML/MIN

→ Nº2 COND.
→ Nº1 CLEANER
→ SCAVENGER
→ Nº2 CLEANER
→ Nº3 CLEANER
→ SPARE

ZINC OXIDE

STORAGE
9 BAGS
@ 100# EA.

(1) DRY REAGENT FEEDER
CONE TYPE-6" DIA.

→ Nº1 CONDITIONER
0.02#/MIN

COPPER PLANT REAGENTS

AEROPROMOTOR Nº3302
LIQUID — USE FULL STRENGTH

STORAGE (30 DAYS)
12 DRUMS
55 GAL EA

TRANSFER PUMP
2 GPM

(1) 100 GAL HEAD TANK
BLACK IRON
3' DIA × 3' H

4 FEEDERS (CLARKSON)
14 ML/MIN EA.

→ Nº1 PRIMARY GRINDING CIRCUIT
→ Nº2 P.G.C
→ Nº3 P.G.C
→ Nº4 P.G.C

AEROPROMOTOR Nº3501
WATER SOLUBLE WHITE
SOLID CAUSTIC REACTIVE

STORAGE (30 DAYS)
60 DRUMS
42 GAL-300# EA.

REAGENT MIXING & SOLUTION
STORAGE WITH S.S AGITATORS
(2) -750 GAL TANKS
5'DIA × 5'H PVC LINED

(1) TRANSFER PUMP
10 GPM

(1) 100 GAL.
HEAD TANK
3'DIA × 3'H

8 FLOWMETERS
238 ML/MIN. EA

→ ROUGHERS } CIRCUIT #1
→ SCAVENGERS
→ ROUGHERS } CIRCUIT #2
→ SCAVENGERS
→ ROUGHERS } CIRCUIT #3
→ SCAVENGERS
→ ROUGHERS } CIRCUIT #4
→ SCAVENGERS

FROTHER

STORAGE (30 DAYS)
65 DRUMS
55 GAL. EA

(1) 200 GAL
MIXING TANK W/ AGITATOR
3'-6" DIA × 4'H BLACK IRON

(1) TRANSFER PUMP
5 GPM

(1) 100 GAL
HEAD TANK
3'DIA × 3'H BLACK IRON

8 FEEDERS (CLARKSON)
ROUGHERS - 56 ML/MIN
SCAVENGERS - 24 ML/MIN

→ ROUGHERS } CIRCUIT #1
→ SCAVENGERS
→ ROUGHERS } CIRCUIT #2
→ SCAVENGERS
→ ROUGHERS } CIRCUIT #3
→ SCAVENGERS
→ ROUGHERS } CIRCUIT #4
→ SCAVENGERS

SUPERFLOC

STORAGE (30 DAYS)
20 DRUMS
42 GAL-300# EA.

REAGENT MIXING & SOLUTION
STORAGE WITH AGITATORS
(2) 2400 GAL TANKS
8'DIA × 8'H

(1) TRANSFER PUMP
10 GPM

(1) 100 GAL HEAD TANK
3'DIA × 3' H

2 FLOWMETERS
0.82 GPM. EA.

→ TAILINGS THICKENER Nº1
→ TAILINGS THICKENER Nº2

ITEM NO.	REQ.	DESCRIPTION	MAT'L	LOCATION	MARK NO.	INSTALLED ON DWG.	REQ'D

BILL OF MATERIAL

NEWMONT EXPLORATION LTD
VEKOL HILLS PROJECT ARIZONA

COPPER AND MOLY PLANT REAGENT FLOW SHEET

SCALE: —
JOB NO. 4832-01
REV. NO.
4832-01-3

REFERENCES DWG NO.	DESCRIPTION
4832-01-1	COPPER FLOW SHEET
4832-01-2	MOLY PLANT FLOWSHEET
4832-01-3	MOLY PLANT GEN'L ARRANGEMENT

DWG NO.	DESCRIPTION

REVISIONS NO.	BY	CK	APP	APP	CLIENT	DATE	DESCRIPTION
1							
2							
3							
4							

REVISIONS NO.	BY	CK	APP	APP	CLIENT	DATE	DESCRIPTION
1							
2							
3							
4							

DRAWN BY: L. PALMA 3-5-71
CHECKED BY:
APP. DEPT. HD.: 3-5-71
APP. PROJ. MGR.
APP. CLIENT

NO.	DATE	PRELIMINARY ISSUE	DEPT. NO.	PROJ. MGR. APPROVED

PARSONS-JURDEN CORPORATION
ENGINEERS & CONSTRUCTORS
26 BROADWAY NEW YORK, N.Y.

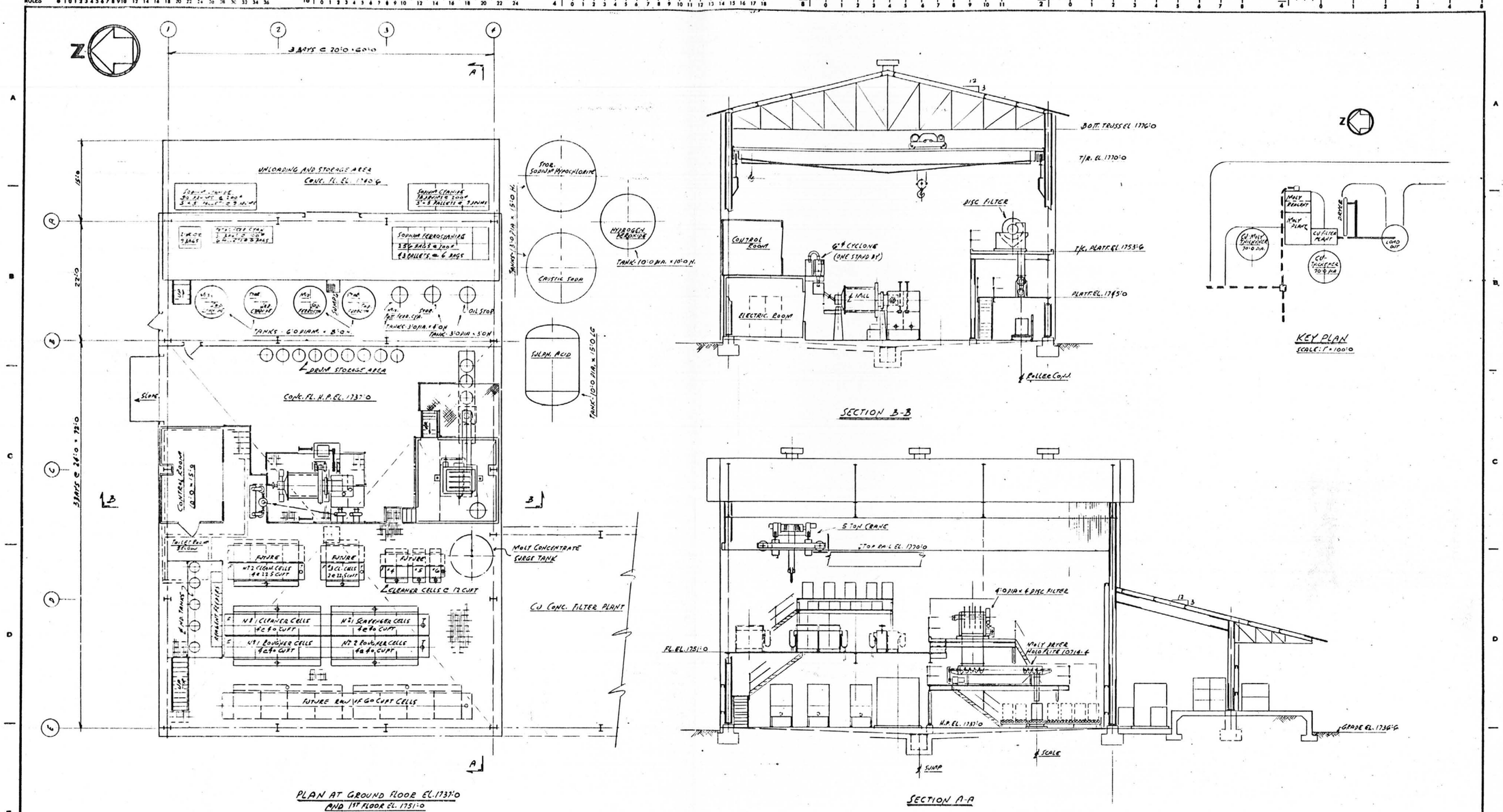

ITEM	NO. REQ	DESCRIPTION	MAT'L	LOCATION	MARK No.	DETAILED ON DWG.	REQ'N

BILL OF MATERIAL

NEWMONT EXPLORATION LTD
VEKOL HILLS PROJECT ARIZONA

DWG. NO.	DESCRIPTION
4832-01-2	MOLY PLANT FLOW SHEET
4832-01-3	REAGENT FLOW SHEET

REFERENCES

REVISIONS

NO	BY	CK	APP	APP	CLIENT	DATE	DESCRIPTION

NO.	DATE	PRELIMINARY ISSUE	DEPT. NO.	PROJ. MGR.
			APPROVED	

DRAWN BY M. KOSUT 3-5-71
CHECKED BY
APP. DEPT. NO. 3-5-71
APP. PROJ. MGR.
APP. CLIENT

PARSONS-JURDEN CORPORATION
ENGINEERS & CONSTRUCTORS
26 BROADWAY NEW YORK, N.Y.

MOLYBDENUM PLANT AND REAGENT
FACILITIES
GENERAL ARRANGEMENT
PLAN AND SECTIONS

SCALE: 1/16" JOB NO. 4832'01 REV. NO.

4832-01-4