CONTACT INFORMATION
Mining Records Curator
Arizona Geological Survey
1520 West Adams St.
Phoenix, AZ 85007
602-771-1601
http://www.azgs.az.gov
inquiries@azgs.az.gov

The following file is part of the

Arizona Department of Mines and Mineral Resources Mining Collection

ACCESS STATEMENT

These digitized collections are accessible for purposes of education and research. We have indicated what we know about copyright and rights of privacy, publicity, or trademark. Due to the nature of archival collections, we are not always able to identify this information. We are eager to hear from any rights owners, so that we may obtain accurate information. Upon request, we will remove material from public view while we address a rights issue.

CONSTRAINTS STATEMENT

The Arizona Geological Survey does not claim to control all rights for all materials in its collection. These rights include, but are not limited to: copyright, privacy rights, and cultural protection rights. The User hereby assumes all responsibility for obtaining any rights to use the material in excess of "fair use."

The Survey makes no intellectual property claims to the products created by individual authors in the manuscript collections, except when the author deeded those rights to the Survey or when those authors were employed by the State of Arizona and created intellectual products as a function of their official duties. The Survey does maintain property rights to the physical and digital representations of the works.

QUALITY STATEMENT

The Arizona Geological Survey is not responsible for the accuracy of the records, information, or opinions that may be contained in the files. The Survey collects, catalogs, and archives data on mineral properties regardless of its views of the veracity or accuracy of those data.

PRINTED: 03-11-2010

ARIZONA DEPARTMENT OF MINES AND MINERAL RESOURCES AZMILS DATA

PRIMARY NAME: SAN XAVIER MINE

ALTERNATE NAMES:
PATTERSON MINE

PIMA COUNTY MILS NUMBER: 239

LOCATION: TOWNSHIP 17 S RANGE 12 E SECTION 2 QUARTER SW
LATITUDE: N 31DEG 58MIN 23SEC LONGITUDE: W 111DEG 05MIN 35SEC
TOPO MAP NAME: TWIN BUTTES - 15 MIN

CURRENT STATUS: PAST PRODUCER

COMMODITY:
ZINC SULFIDE
LEAD SULFIDE
SILVER
COPPER
GOLD LODE
BARIUM BARITE
GYPSUM

BIBLIOGRAPHY:
ADMMR SAN XAVIER MINE FILE
ELEVATORSKI,E.A.,1978, AZ INDUSTRIAL MINERALS
ADMMR MINERAL REPORT NO. 2, P. 49.
ADDITIONAL WORKINGS IN SEC. 3,10,11
AZBM BULL 189, P 137; 1974
USBM IC 7581
USGS 318 P. 103
USGS 725J P. 412
USGS PP 550A P A3
EASTLICK,J.T.AND G.W. IRVIN., GEOLOGY HISTORY
SAN XAVIER MINE - ADMMR GEOLOGY FILE
ABM MAPS UNDERGROUND,GEOLOGY AND SECTIONS
AZBM BULL 156 P. 43

SAN XAVIER

PIMA COUNTY
PIMA DIST.
T17S, R12E, sec 2,3,10,11

References: -

BANNER MINING COMPANY (file)

USBM I.C. #7581

USGS Bull. 725-J p. 412
USGS P.P. 318 p. 103
USGS P.P. 550-A p. A3

ABM Bull. 180, p. 377, 96

Eagle=Picher (geology file) (George M. Fowler report)

SKILLINGS MINING REVIEW, 6-10-72, p. 4
SKILLINGS MINING REVIEW, 9-23-72, p. 25

E/MJ, Jan. 1972, p.77
E/MJ, June 1972, p.19
E/MJ, Feb. 1973, p.129
E/MJ, Mar. 1973, p.11-15

Geology and History of the San Xavier Mine, Az. By J. T. Eastlick, Inspiration and G. W. Irvin See: Geology File

MAPS - Upstairs in the ABM rolled file boxes - maps on underground, topi, geology and sections.

MILS SAN XAVIER MINE #0040190388

Three maps available in Tucson office.

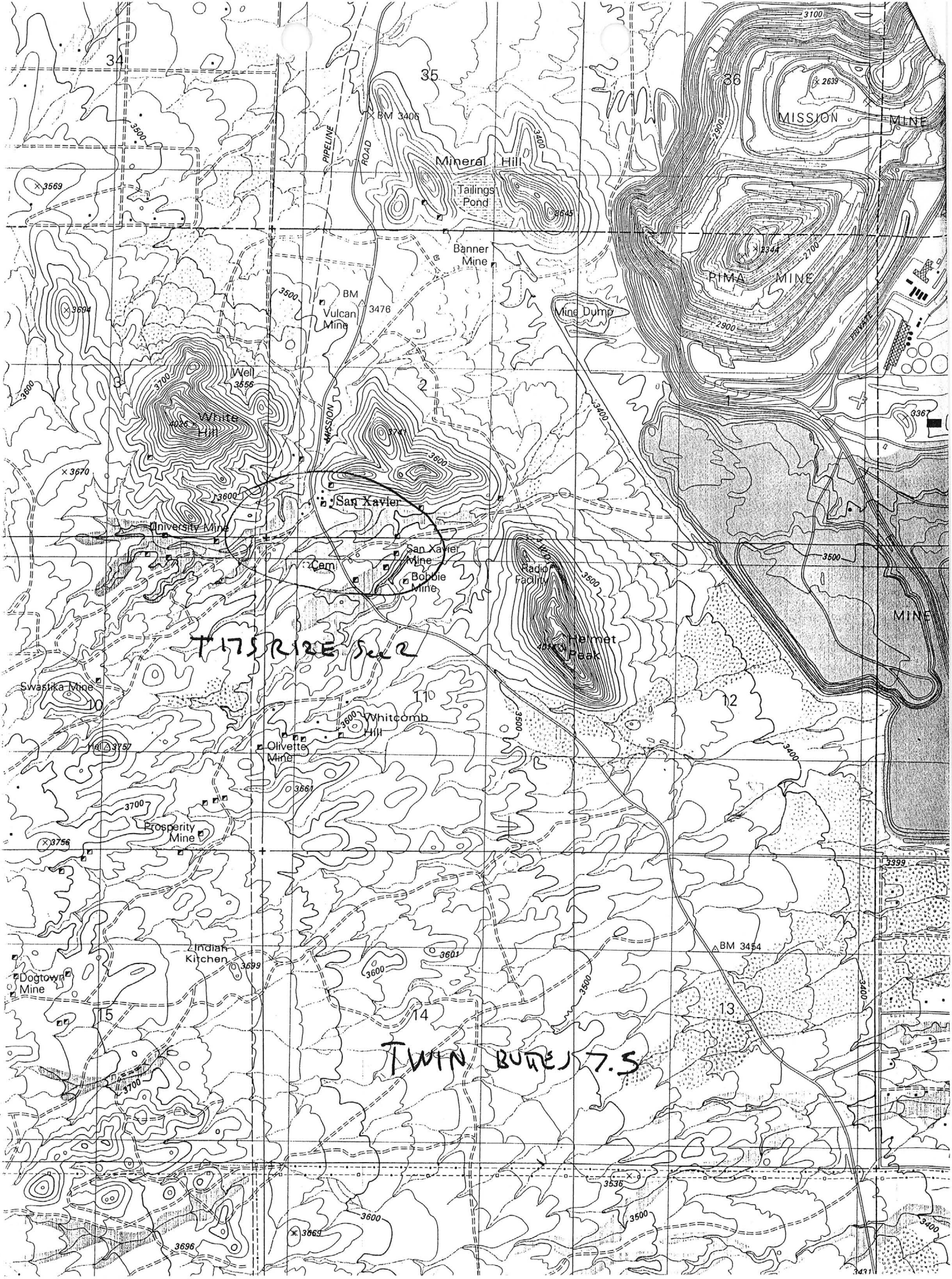
34
35
36
BM 3406
PIPELINE
ROAD
Mineral Hill
Tailings Pond
Banner Mine
BM
Vulcan Mine
3476
Mine Dump
MISSION
MINE
PIMA
MINE
Well
3556
White Hill
MISSION
San Xavier
University Mine
San Xavier Mine
Cem
Bobbie Mine
Radio Facility
Helmet Peak
MINE
T17S R12E S&R
Swastika Mine
10
11
12
Whitcomb Hill
Olivette Mine
Prosperity Mine
Indian Kitchen
Dogtown Mine
BM 3454
15
14
13
TWIN BUTTES 7.5

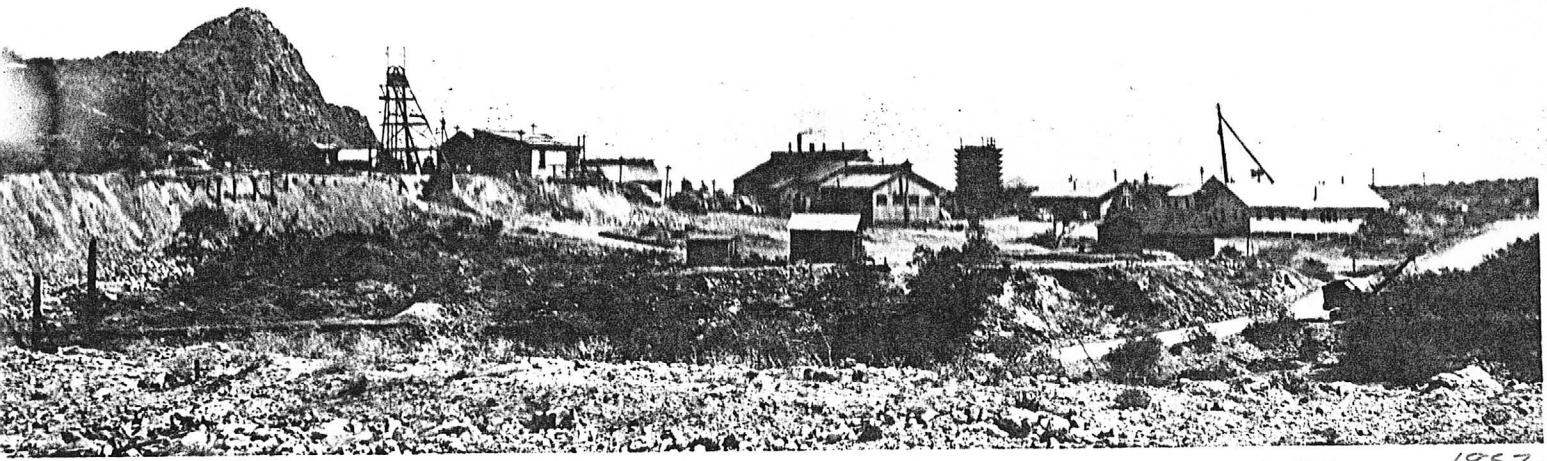

A-181-45

1952

1952

A-181-46

1952

[redacted]

MINING WORLD 10-5-58

[redacted]

MINING WORLD 6/1957

McFARLAND & HULLINGER (LESSEES & MINE OPERATORS)
Box 238, Tooele, Utah, or
Box 811, Tucson, Ariz.

MINE: San Xavier Mine, Pima County, - About 25 Mi. S of Tucson.
OWNER: Eagle Picher Mining Co. 6-17-55

EUREKA(Formerly "Pinafore", Eureka Dist., Yavapai Co. 10-30-56

EAGLE PICHER MINING CO. (OWNER)

SAN XAVIER MINE, Pima County, About 25 mi S of Tucson.
LESSEES & MINE OPERATORS: McFarland and Hullinger,
Box 238, Tooele, Utah. or local address-
Box 811, Tucson, Arizona 6-17-55

original San Xavier Pima Co.

Rodeo Rayon
Tucson Star
Feb 23, 1950

ARIZONA DEPT. OF MINES & MINERAL RESOURCES
STATE OFFICE BUILDING
1616 W. CONGRESS, ROOM 161
TUCSON, ARIZONA 85701

Information from MINE INSPECTOR'S OFFICE - August 15, 1957

SAN XAVIER (37 claims) Pima Dist. 3-14-57
Twin Buttes, Ariz. (Temp. shut down service)

Owner - E. G. McFarland & S. R. Hullinger
Box 811, Tucson, Ariz.

Supt - W. D. Nelson, Box 811, Tucson, Ariz.

LEAD - ZINC - COPPER 2000 tons - 33 men

L.A.S.

SAN XAVIER MINE PIMA COUNTY

The San Xavier Mine and surface plant of McFarland and Hullinger in Pima County, Arizona, has been acquired by Banner Mining Co. under a lease and option arrangement. Seventeen patented and 52 unpatented mining claims and three claims covered by State leases adjoining Banner's Mineral Hill property are involved in the transaction. Although the mine is presently inactive, it is being kept dewatered to the 820' level and the shaft is being maintained. Mining Congress Journal May 1960 p. 88

The Banner Mining Company, A. B. Bowman, V.P. and Gen. Mgr., has purchased the San Xavier mine near Sahuarita, Arizona, from McFarland & Hullinger. McFarland & Hullinger acquired both the San Xavier mine and Sahuarita mill from Eagle-Picher Company, Box 910, Miami, Oklahoma, early in 1957 following approximately two years of leasing operations. Since then production from the mine has been intermittent, depending upon marketing conditions and metal prices. Shortly before the shutdown at the end of October 1959, the San Xavier had been producing about 60 tons of lead-zinc ore daily.
Mining World May 1960 p. 87

Visited the San Xavier Mine - Mr. J. McGavock is watchman. GWI WR 9-30-67

Prof. Tom O'Neil revealed that the University owns only the top 500 feet of the San Xavier experimental mine in Pima Co. Most of the work is done on the 250 ft. level.
CJH/ WR Jan. 2, 1981

San Xavier Mine (F)

K

THE UNIVERSITY OF ARIZONA
TUCSON, ARIZONA 85721

COLLEGE OF ENGINEERING AND MINES
DEPARTMENT OF MINING AND
GEOLOGICAL ENGINEERING

BUILDING #12
TELEPHONE: (602) 621-6063

ARIZONA CONFERENCE - AIME
UNDERGROUND MINING DIVISION - SPRING MEETING
HOSTED BY UNIVERSITY OF ARIZONA
DEPARTMENT OF MINING AND GEOLOGICAL ENGINEERING

You are invited to attend the Spring Meeting of the Underground Mining Division, Arizona Conference of AIME on Saturday, April 25th at the University's San Xavier Mining Laboratory. The program will be:

9:00 - 9:30am	Registration
9:30 - 9:35am	Introduction - Ian Farmer (U of A)
9:35 - 10:00am	History of the San Xavier Mine and Mining Laboratory - Ed Jucevic (Consulting Engineer)
10:00 - 10:25am	Geology of the San Xavier Mine - Bill Peters (U of A)
10:25 - 10:50am	Research and training at the Mining Laboratory - Mel Garcia and Satya Harpalani (U of A)
10:50 - 11:00am	The AIME Student Chapter and the San Xavier Mining Laboratory - Karen Knudsen (U of A)
11:00am - 2:00pm	Mine Tour

Self guided tours to see parts of the mine and demonstrations of research and training activities.

(1) The Adit Level
(2) Down the shaft to the 100ft level and up the corkscrew drift.

12:00 pm onwards - Barbeque lunch and refreshments

NOTE: A map is attached giving directions to the San Xavier Mining Laboratory. It is important to know in advance the exact numbers attending, and you are asked to return the attached sheet before April 20th, 1987.

GEOLOGIC NOTES ON THE UNIVERSITY OF ARIZONA'S
SAN XAVIER MINING LABORATORY.

The laboratory is at the number 6 (San Xavier Extension or San Xavier West) shaft on the south slope of Garnet Hill, one-half mile to the southwest of the number 7 shaft at the main San Xavier Mine.

Mine workings at the laboratory comprise an adit and a shaft, with levels at 100, 150, and 250 feet. At a deeper and now-caved 340-foot sublevel, the workings are connected to the abandoned number 7 shaft.

Production at the entire San Xavier mine, operated from 1880 until 1958 and to a depth of 900 feet, amounted to approximately 800,000 tons of ore averaging 11% Zn, 6% Pb, 3 oz Ag/t, and 0.7% copper. Production from the number six shaft amounted to approximately 5000 tons of ore averaging 10% Zn, 2% Pb, 7 oz Ag/t, and 1.0% Cu. Operating companies included New Jersey Zinc, Eagle-Pitcher, and MacFarland & Hullinger.

The stoped orebodies at the number 6 shaft were irregular chimney- and lens-shaped. They are spatially associated with two south-dipping skarn zones of garnetite-hornfels, a flatter zone along a thrust fault in Permo-Pennsylvanian Concha Limestone and a steeper zone in the limestone beneath its contact with Cretaceous arkose. The ore shoots are structurally associated with the brecciated intersections of faults and shears with the pricipal garnetite-hornfels zones.

Some oxidized ore mineralization remains near the stoped areas; minor amounts of Zn-Pb-Cu sulfide ore mineralization remain in accessible parts of the the west end of the 100 level and the south end of the 150 level workings.

Student geological work at the San Xavier Mining Laboratory has involved the mapping of Garnet Hill and the mapping and sampling of the adit, 100, and 150 levels, plus accessible stopes and raises.

WCP
1987

AIME SPRING Tour 1987

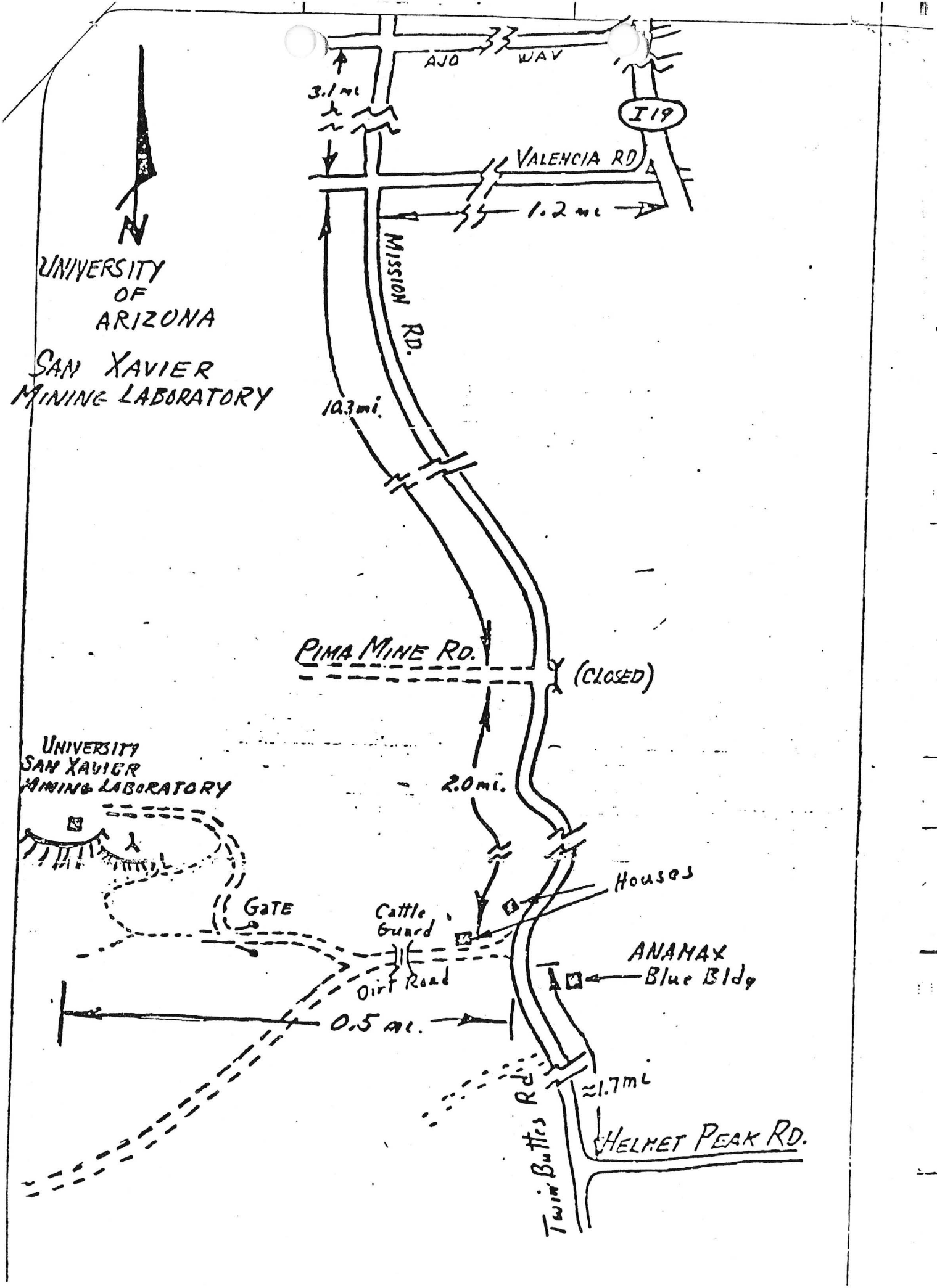
N
UNIVERSITY OF ARIZONA
SAN XAVIER MINING LABORATORY
AJO WAY
3.1 mi
I 19
VALENCIA RD
1.2 mi
MISSION RD.
10.3 mi.
PIMA MINE RD.
(CLOSED)
UNIVERSITY SAN XAVIER MINING LABORATORY
2.0 mi.
Houses
GATE
Cattle Guard
Dirt Road
ANAMAX Blue Bldg
0.5 mi.
≈1.7 mi
Twin Buttes Rd
HELMET PEAK RD.

Sterns Roger
Denver

Dr. Peleus
[illegible]?

lan - --?

DEPARTMENT OF MINERAL RESOURCES
STATE OF ARIZONA
FIELD ENGINEERS REPORT

Mine: San Xavier
Date: September 3, 1959
District: Pima, Pima County
Engineer: Axel L. Johnson
Subject: Present Status - Information from G. W. Irvin

References: Report of May 29, 1958

Present Mining Activity: Mining ore and milling same in Sahuarita. 20 men working at the mine 1 shift, 6 days per week. 14 of these men are working underground. Production about 60 tons of ore per day.

Milling Facilities: At present the concentrates are stockpiled pending the settlement of the strike.

SAN XAVIER MINE

PIMA COUNTY

Mr. Irvin reports property closing down. FPK 9-29-59

DEPARTMENT OF MINERAL RESOURCES
STATE OF ARIZONA
FIELD ENGINEERS REPORT

Mine: San Xavier Mine
Date: Nov. 2, 1959
District: Pima District, Pima County
Engineer: Axel L. Johnson
Subject: Present Status

Mr. Irvin reports that the mine closed down last Friday, October 30th.

Active Mine file

DEPARTMENT OF MINERAL RESOURCES
STATE OF ARIZONA
FIELD ENGINEERS REPORT

Mine San Xavier Mine — Date May 29, 1958

District Pima Mining District, Pima County — Engineer Axel L. Johnson

Subject: Field Engineers Report. Information from G. W. Irvin and Personal Visit.

References Reports of Feb. 11, 1958 and June 26, 1957.

Location Secs. 2, 3, 10, & 11 -- T 17 S -- R 12 E.
About 23 miles south of Tucson.

Owners & Operators McFarland and Hullinger, Box 238, Tooele, Utah.
(Local address --- Box 811, Tucson, Ariz.)
W. D. Nelson, Superintendent.
G. W. Irvin, Engineer and Geologist.

Principal Minerals Lead and Zinc ores --- all sulphides.

Present Mining Activity Mining ore and milling same at their mill at Sahuarita.
Ore production about 2,500 tons per month.
23 men working at the mine ---- 1 shift, 6 days per week. (14 miners

Geology & Mineralization Limestone replacement. The limestone is replaced by hedenbergite, ~~hedenbergite~~ a calcium-iron silicate, and the hedenbergite later is replaced by the ore. Mr. Irvin reports that the stopes average about 1,000 sq. ft. in area (width 5' to 30' and length 20' to 200') with a height of from 300' to 400'. These ore chimneys slope approx. 55 degrees, (from 40 degrees to 80 or more).

Ore Values Mr. Irvin estimates that the grade of the ore mined at present is about viz: Lead --- 6 %; Zinc ----- 14 %; Silver ---- 5 oz.; Copper ---- 0.75 %.

Ore in Sight & Probable See report of Feb. 11, 1958.

Milling & Marketing Facilities The ore is milled at their mill at Sahuarita, being hauled there in their own trucks. Length of haul about 12 miles. This is a 300 ton per day flotation mill. It is being operated one shift per day, 6 days per week. Lead and Zinc concentrates are produced. The lead concentrates, containing a small amount of copper, are shipped to the A. S. & R. smelter at El Paso, Texas. The zinc concentrates are shipped to the American Zinc Co. at Dumas, Texas.

Mine Workings Mine has over 12 miles of drifts and raises. The levels, which are open at the present time are viz: 340, 420, 500, 580, 660, 740, 820, and 900. Of these, the 660' level is the most extensive, having over 6,000 ft. of drifts. The 900' level is still under water.

Present Mining Operations Mining methods are very flexible, depending on conditions in the various stopes worked. On account of heavy ground, a considerable amount of square sets have to be used. A considerable amount of back filling is also being done. Ore is trammed to the shaft by means of storage battery locomotives. The ore cars are pushed on the cage and hoisted, and the empty cars are returned.

The following levels are being worked at the present time, viz:

420' level ----- 1 stope.
500' level ----- 1 cross cut.
660' level ----- 2 stopes.
740' level ----- 2 stopes.
820' level ----- 1 stope. 14 miners working underground.

DEPARTMENT OF MINERAL RESOURCES

STATE OF ARIZONA

FIELD ENGINEERS REPORT

Mine San Xavier Mine and Mill @ Sahuarita Date February 11, 1958

District Pima Mining Dist., Pima County Engineer Axel L. Johnson

Subject: Present Status. Information from G. W. Irvin, Engineer and Geologist.

References Reports of June 26, 1957 & June 17, 1955

Location Sections 2, 3, 10, & 11 -- T 17 S -- R 12 E.
About 23 miles south of Tucson.

Owners & Operators McFarland and Hullinger, Box 238, Tooele, Utah
(Local address - Box 811, Tucson Arizona)
W. D. Nelson, Supt., G. W. Irvin, Engineer & Geologist.

Principal Minerals Lead and zinc ores, all sulphides.

Present Mining Activity Mining ore and milling same at the Sahuarita Mill. Production about 2,000 tons per month. 27 men working - 22 at the mine and 5 at the mill. Both mine and mill work 1 shift.

Ore Values Milling grade ore. See previous reports.

Ore in Sight & Probable Not reported by owners, but said to be sufficient for 2 or more years production, on the part of the mine above the 600 ft. level. (part of the mine below the 600 ft. level has not been worked). There is also considerable area in the claims held, which has, as yet, not been explored.

Milling and Marketing Facilities Ore milled at the Sahuarita Mill. This is a 300 ton per day flotation mill, producing lead concentrates shipped to the A. S. & R. Smelter at El Paso, Texas and Zinc concentrates shipped to the A. S. & R. Smelter at Amarillo, Texas.

Past History Mine was closed down on June 21, 1957. Mine was reopened again in December, 1957.

Present Mining Operations Ore production from the mine is obtained principally from 6 stopes --- 3 stopes on the 740 ft. level, and 1 stope on each of the following levels --- the 580, 660 and 820 ft. A couple of drifts are also being driven.

Additional Remarks Owners would like to mill custom ores (Lead & Zinc sulphides) from other mine producers.

From the desk of

FRANK P. KNIGHT

12-2-57

McFarland & Hullinger are soon to resume operations at San Xavier - including milling.

Lead-Zinc Pima Co.

DEPARTMENT OF MINERAL RESOURCES
STATE OF ARIZONA
FIELD ENGINEERS REPORT

Mine San Xavier Mine and Mill @ Sahuarita Date June 26, 1957

District Pima Mining Dist., Pima County Engineer Axel L. Johnson

Subject: Present Status. Information from G. W. Irvin, Engineer and Geologist.

References Report of June 17, 1955 and previous reports.

Location Sections 2, 3, 10, & 11 -- T 17 S -- R 12 E.
About 23 miles south of Tucson.

Owners McFarland and Hullinger, Box 238, Tooele, Utah.
Property reported purchased from Eagle Picher Co., some time during the past year. Terms not published. Sahuarita mill also purchased in Feb. by McFarland & Hullinger.

Operators Same as above.

Principal Minerals Lead and zinc ores, all sulphides.

Present Mining Activity Idle. Mine closed down on June 21, 1957, except for filling in waste in some of the open stopes. Mine to be completely closed on Sat. June 29, except for a couple of men to act as watchmen and keep the mine pumped out.

Ore Values See previous reports.

Ore in Sight Not reported by owners, but said to be sufficient for 2 or more years production, on the part of the mine above the 600 ft. level. (part of the mine below the 600 ft. level has not been worked). There is also considerable area, in the claims held, which has, as yet, not been explored.

Milling and Marketing Facilities Company also owns the Sahuarita mill, which was also purchased from Eagle Picher Co. last February. This is a 300 ton per day mill.

Present Operations None. Mine closed down.

Proposed plans Operators reported to plan on keeping the mine closed until the price of lead goes back to 16 cents and the price of zinc returns to 13 cents.

DEPARTMENT OF MINERAL RESOURCES
STATE OF ARIZONA
FIELD ENGINEERS REPORT

Mine San Xavier Mine Date June 17, 1955

District Pima Mining Dist., Pima County Engineer Axel L. Johnson

Subject: Present Status - Personal Visit and information from G. W. Irwin.

Location: Sections 2, 3, 10, and 11 -- T 17 S -- R 12 E.
About 25 miles south of Tucson.

Owners: Eagle Picher Mining Co. (12-12-60 ALJ) Box 910, Miami, Okla.

Lessees and Mine Operators: McFarland and Hullinger, Box 238, Tooele, Utah.
(local address--Box 811, Tucson, Ariz.)

Terms of Lease: The lease now covers all of the San Xavier Mine owned by Eagle Picher Mining Co. It is a straight five year lease, with option to renew. The terms of the lease are not made public, but it is understood that it is a "split check deal", which is tied up with the milling of the ore by the Eagle Picher Mining Co. in their mill. (The term "split check deal" is not for publication).

Officers: W. D. Nelson, Mine Mgr., Box 4, Sasabe Star Route, Tucson, Ariz.
G. W. Irwin, Engineer and Geologist, P. O. Box 512, Nogales Highway, Sahuarito, Ariz.

Principal Minerals: Zinc and lead ores, all sulphides.

No. of Men Employed: 25.

Production Rate: Approximately 1500 tons per month. All the ore is milled at the Sahuarito mill by the Eagle Picher Co. The mine and mill both work one shift.

Ore Values: Rough estimate--10% zinc, 5% lead, 3 oz. silver. The above values are not for publication.

Milling and Marketing Facilities: See report dated Feb. 21, 1955, and below. *

Present Operations: Stoping ore now from the 580', the 500', the 420' and the 340' levels. There are seven stopes in all. Doing some exploration work, exploring with long hole Copco drill and Ingersoll Rand drill, drilling 50' holes with 1" round steel and 7/8" hexagonal steel. Very little sampling of the holes; the cuttings from the holes are collected and panned, then examined for minerals by inspection. Four hundred feet of ~~hole~~ drilling was done this past month. This work is done whenever it is convenient and a crew is available. Some exploratory drifting and raising is also being done.

Ore in Sight: According to Mr. Irwin, the ore reserves are sufficient for about 6 or 7 months production. This does not include the part of the mine which is still under water; that is, below the 600' level.

*Milling and Marketing (cont.): (1) Shipping lead, copper, and silver concentrates to the A. S. & R. Co. smelter at El Paso, Texas. (2) Shipping zinc concentrates to A. S. & R. Co. smelter at Amarillo, Texas.

DEPARTMENT OF MINERAL RESOURCES
STATE OF ARIZONA
FIELD ENGINEERS REPORT

RECEIVED
FEB 24 1955
DEPT. MINERAL RESOURCES
PHOENIX, ARIZONA

Mine San Xavier Mine Date Feb. 21, 1954

District Pima Mining Dist., Pima County. Engineer Axel L. Johnson

Subject: Present Status. Personal Visit and Information from G. W. Irwin.

Location Sections 2, 3, 10, & 11 --T 17 S -- R 12 E.
About 25 miles south of Tucson.

Owners Eagle Picher Mining Co.

Lessees and Mine Operators McFarland and Hullinger, Box 238, Tooele, Utah.

Terms of Lease The lease covers certain patented mining claims in the main part of the San Xavier Mine, and from the 660 ft. level ane up. The three bottom levels below the 660, and now under water, are not covered in the lease. The terms of the lease are not available, but it is understood that it is a ''split check deal'', which is tied up with the milling of the ore by the Eagle Picher Mining Co. in the Eagle Picher's mill. (The term ''split check deal'' is not for publication.)

Officers W. Nelson, Superintendent, Box 4, Sasabe Star Route, Tucson, Arizona.
G. W. Irwin, Mining Engineer, P. O. Box 512, Nogales Highway, Sahuarite, Ariz.

Principal Minerals Zinc and Lead ores----all sulphides.

Number of Men Employed 20 at present. Will be increased to 25, when ore production starts.

Production Rate No production yet. Expect a production of about 60 tons per day, after ore production is started.

Ore Values Rough estimate of ore values are ----- 10 % Zinc ----5 % Lead -----3 oz. Silver. The above values are not for publication.

Milling and Marketing Facilities The ore mined by the lessees will be milled by the Eagle Picher Mining Co. at their own mill at Sahuarita. The terms under which the ore is milled is included in the lease agreement in a sort of a split check deal between the Eagle Picher Co. and the lessees. (The term ''split check deal'' is not for publication.)

Present Operations Work is being done at present in cleaning up the drifts onthe 340, 420, 500 & 580 levels. Lessees will now start pumping water for domestic supply, thereby also lowering the water level. The water level now is just below tthe 580 ft. level. The shaft is in good condition.

Proposed Plans Not stated.

Other Recent Work at the Mine The Eagle Picher Mining Co. did diamond and churn drilling under contract from June, 1954 to Nov. 1954. This was outside the present leased area.

DEPARTMENT OF MINERAL RESOURCES
STATE OF ARIZONA

~~FIELD ENGINEERS REPORT~~
NEWS ITEM

Mine San Xavier Mine Date Jan. 11, 1952.

District Pima Mining Dist., Pima Co. Engineer Axel L. Johnson,

Subject: News Item--- Source of Information- Eagle Picher Mining Co.

Location At San Xavier-- 25 miles south of Tucson.

Operators Eagle Picher Mining Co.

Metals Mined Zinc and Lead, mostly all in the form of sulphides.

Men Employed Atotal of 300 men--- 265 men working in the mine, 30 men in the mill, and 5 men in the office

Production Rate About 270 tons of ore per day mined, and treated in the mill. Totalx for the month is about 7000 tons of crude ore, from which approximately 900 tons of zinc concentrates and 550 tons of lead concentrates are produced. Ore mined mostly all in form of sulphides of zinc and lead.

Milling Facilities A mill treats the ore as shown above. Custom ores are also treated in this mill, which is located at Sahuarita, Ariz.

Ore Valuew No information given out.

Miscellaneous Following wages are paid:
Miners --- $13.56 per 8 hr. day.
Muckers--- $12.20 per 8 hr. day.
Timbermen- $14.56 per 8 hr. day.

January, 1950—Engineering and Mining Journal

STATE TAX COMMISSION v. EAGLE PICHER MINING & SMELTING CO.

No. 5316

Supreme Court of Arizona

March 10, 1952.

Action by Eagle Picher Mining & Smelting Company against State Tax Commisson and County of Pima, in nature of attach on assessed valuation of plaintiff's mine for tax purposes. The Superior Court of Pima County, Lee Garrett, J., adjudged full cash value of mine, plant and equipment , to be $306,386.03, and defendants appealed. The Supreme Court, La Prade, J., held that evidence, when considered in light of proper formula for valuation of mines, sustained valuation as arrived at by trial court.

Judgment affirmed.

Phelps and De Concini, JJ., dissented.

1. Taxation 493(7)

In proceedings by taxpayer attaching appraisal and assessed valuation on mine as fixed by Tax Commission, evidence before trial court, when proper formula for arriving at full cash value of producing mine was applied, warranted finding that full cash value of mine and plant togehher , considered as a unit, was $306,386.03.

2. Taxation 493 (7)

In mine owner's action against State Tax Commission attacking valuation of mine for tax purposes, wherein State contended that allowance for future ore must at least be equal to amount allowed for cost of its development, evidence established that portion of amount objected to by State was allowancw for exploratory work for discovery of new ore and that same was independent and separate from cost of development of ore which had been located.

3. Taxation 348

As used in reference to mining operations, word "exploration" refers solely to effort to find additional tonnage and consists almost exclusively of diamond drilling and sampling, whereas word "development" refers to steps necessarily taken to reach ore in mine so that it can be mined and consists of running drifts, crosscuts and raises through ore zone, with some diamond drilling.

(See publication Words and Phrases, for other judicial constructions and definitions of "Exploration" and "Development".

4. Taxation 348

Where ore bodies in particular mine were not found in compact masses such as veins or lodes, but were replacements in limestone formations scattered irregularly throughout, "development" of mine, consisting of steps necessary to take to reach ore, was not synonymous with "extraction", and costs for extraction and development were separate for purpose of determining value of mine for tax purposes.

Fred O. Wilson, Atty. Gen., Perry M. Ling, Chief Asst. Atty.Gen., and Earl Anderson, Asst. Atty. Gen., for appellants.

Ben C. Hill of Tucson, and Norman S. Hull, of Phoenix, for Appellee.

LA FRADE, Justice.

This is an appeal from the judgment of the Superior Court of Pima, County, Arizona, adjudging the full cash value of the mines, plant and equipment of the appellee corporation to be the sum of $306,386.03 for the purpose of taxation for the tax year of 1949. The judgment is challenged on the ground that it is contrary to the evidence and law applicable.

The proceedings in the superior court originated as an appeal from the appraisal and assessment fixed by the state tax commission sitting as the state board of equalization on the San Xaviar group of producing mines situate in the Pima mining district, Pima County, Arizona, owned and operated by the appellee Eagle Picher Mining & Smelting Company, hereinafter referred to as the company. The amount of assessment, as fixed and reviewed by the commission, on the mines only was $1,000,000. The amount of assessment on the plant and equipment, as fixed by the county assessor of Pima County was the sum of $146,405, making the total amount of assessment for the mines, plant and equipment in the sum of $1,146,405.

The trial court found that the foregoing assessment was excessive and further found the full cash value of the mine, plant and equipment to be the sum of $306,386.03 and found the full cash value of the mine only, after deducting the assessed value of the plant and equipment from the overall valuation, to be the sum of $159,981.03. The company, prior to prosecuting its appeal to the superior court, paid under protest to the county treasurer the full amount of taxes levied and assessed against its property on the valuation of $1,146,405, following the provisions of Section 73-110, A.C.A.1939. The protest was to the effect that the assessment was excessive in the sum of $986,423.97.

At the hearing before the superior court, the company called and examined two witnesses, Mr. L. A. Walker and Mr. Herbert M. Fay, mining engineers, both of whom qualified as experts on mine valuations. The state offered no evidence. These witnesses testified in details as to the value of the property and how they arrived at such value. Each of the witnesses testified that he was of the opinion that the full cash value of appellee's mines and equipment, including railroad spur, mill, office building and other buildings at the mine, was $306,386.03; and that in arriving at this value they assessed the mine and plant as a unit for the asserted reason that the plant, mill and personal property were of no value, except for salvage purposes, without the mine and likewise that the mine was of no value without the plant, mill and personal property.

The court, in order to find the full cash value of the mine as distinct from the plant and surface properties for taxation purposes, subtracted the amount fixed by the county assessor, to wit, $146,405, as the assessed valuation of the plant, mill and personal property, from the estimates of the engineers.

The following tabulation, submitted by counsel for appellee, contains, we believe, an accurate analysis and summarizes the engineering testimony as to the valuation:

	Mined 46,308 Tons	Reserve 46,980 Tons
Estimated Value Ore Reserves	$1,613,531.64	$1,349,735.40
Less Cost of Production and Marketing	1,377,663.00	1,304,634.60
	$ 235,868.64	$ 45,100.80

Brt. Forward....	$	45,100.80
Total Profit Ore Reserves.....	$	280,969.44
Discount future profits to cash value using Hoskold Table with 8% risk rate and 4% redemption. Life of mine one year. Factor 0.92593.....		260,158.03
Scrap value of plant estimated at $50,000 with 4% discount for two years to reduce to cash value. Factor 0.92456.....		46,228.00
Total Cash Value Mine and Equipment	$	306,386.03
Less asses value of personal property.....		146,405.00
Value of Mining Property.....	$	159,981.03

It is the psoition of the state that the judgment is erronsous in that the evidence shows the entire holdings to be valued for tax purposes before discounts at $427,374.44. This sum is arrived at by the following tabulation:

Total Profit (value of ore).....	$	280,949.44
plus assessed Value of Personal property made by the County Assessor		146,405.00
Total cash value of Mine and Equipment	$	427,374.44
Total cash value of Mine and Equipment after discounts.....	$	405,000.92

)1) It is the position of the state that the assessment made by the county assessor of the plant, equipment and personal property was final and could not be changed or lowered in the trial court since there has been no appeal from this assessment. In this behalf ~~this~~ it is contended that the trial court should not have considered the valuation placed on said personal property by the appellee's witnesses, and that the trial court in accepting the evidence as to the salvage value of the personal property indirectly reduced the value of the personal property as theretofore fixed by the county assessor. These contentions are without merit since the precise point has heretofore been decided and we see no occasion to depart from the holdings in prvious cases setting forth the formula to be adopted in arriving at the full cash value of a producing mine. The rules are clearly set forth in State Tax Commission v. United Verde Extension Mining Co., 39 Ariz. 136, 4 P.2d 395, rehearing denied 39 Ariz. 331, 6 P.2d 889; State Tax Commission v. Magma Copper Company., 41 Ariz. 97, 15 P.2d 961; and State Tax Commission v. Phelps Dodge Corp., 41 Ariz. 320, 157 P2d 693. The identical contentions set forth here were made in the Phelps Dodge case, supra, wherein it was pointed out and the reasons disclosed why the court should deduct the value of the property assessed by the county assessor from the value of the mine and plant considered as a unit, and it was pointed out and demonstrated why present worth of the salvage value of the personal property should be added to the present worth of the future profits to be taken from the mine for the tax year in question in arriving at the full cash value of a producing mine for taxation purposes. From the only evidence that was produced the trial court was left with no alternative but to find that the full cash value of the mine and plant together, considered as a unit, was the sum of $306,386.03, which under the judgment is the ad valorem value upon which the company paid tax.

(2) The correctness of the judgment is also challenged on the ground that the court was in error in allowing the sum of

$129,664.80 to be charged as a cost of production where said sum was proposed to be expended for development work, and only crediting new ore as an asset for taxation purposes of the value of $16,970. The state, relying on the rule set forth in State Tax Commission v. Magma Copper Co., supra, and State Tax Commission v. Eagle-Picher Mining & Smelting Co., 71 Ariz. 290, 226, P.2d 555, insists that in fixing the value of a producing mine for tax valuation purposes where a deduction from the value of the existing ore of the mine for development of future ore has been allowedm there must be an allowance for such future ore at least equal to the cost of such development work.

The valuation engineers and the trial court estimated the ore reserves as of August 1, 1949 consisted of 46,980 tons of commercial ore with a sale value of $1,349,735.40. This ore was classified as "positive" ore"and "probable ore" depending upon whether it had been cut and was measurable on three sides, in the case of the positive ore or only on two sides in the case of probable ore, of the block or cube in the process of the development work which had already been performed. The 46,980 tons of ore in reserve was said to consist of 30,010 tons of positive ore and 16,970 tons of probable ore. Briefly, it is the state's position that it is unreasonable and contrary to the rules heretofore established for the court to allow an expenditure of approximately $130,000 for development and charge the same against the cost of production of ore and allow a credit against this charge of only 16,970 tons of probable ore with a new value of approximately $16,000. The foregoing contention has its origin in the following fact situation: The evidence before the court disclosed that the ore bodies in this mine are not found in compact masses such as in veins or lodes but rather are found as replacements in limestone formations scattered irregularly like "raisins in a pudding". "There didn't seem to be much rhyme or reason to the disposition of these ore bodies." The evidence was that this condition required extensive and expensive development necessitating an unusual amount of drifts and sub-drifts, raises and winzes. The principal production was coming from the 420, 500, and 580-foot levels with some minor production on the 340-foot level.

The trial court following the testimony of the engineers found the sale value of the 46,980 tons of ore to be $28.73 per dry ton to be produced at a cost of $27.77 per dry ton leaving a net profit of 96¢ per day ton. Included in the dry ton cost of $27.77 per ton was an item of 41¢ per ton for exploration and an additional item of $2.76 per ton for development. The development cost claimed and allowed was made up of the following three items: Diamond drilling 36¢; raises 89¢¢ drifts and crosscuts $1.51. With reference to this claimed charge of $2.76 for development, one of the engineers was interrogated as follows:

> "Q. Did I understand you to mean by 'development' work done for the purpose of developing ~~nf~~ new ore? A. It is for the development of new ore and for ingress or egress toward the ore bodies.
>
> "Q. In other words, it is working facilities to the ore bodies? A. Yes.
>
> "Q. Working facilities to the ore bodies or prospective ore bodies? Both."

Further examination of the witness led to the following statement: "The term 'development' is the dead work necessary to open up ore or ore bodies for extraction by lateral, vertical or any other means of opening to get into the ore body so it can be mined out."

It appears to us that the state is confusing the terms "exploration" and "development" and in adding the 41¢ per ton exploration cost to the $2.76 per ton development cost to reach a combined figure of $3.17 per ton and assuming $148,926.80 for "exploratory work" to discover 16,970 tons of probable ore worth approximately $16,000. We make this observation in view of the testimony of the engineer, Mr. Walker, to this effect; "A. Mr. Ling, maybe we are talking about different ores. We spoke about the positive ore and the probable ore and put it all in the ore estimate of 46,980 tons; that being the case, this amount of money that is being spent on the 46,980 tons rather than segregating out the 16,000 tons."

Apparently the trial court was satisfied with this explanation. It is also made to appear from the evidence that during the first seven months of the year there was mined 46,308 tons and that the ore reserves as of August 6, 1949 exceeded those of January 1st. The engineers also estimated that the ore reserves as of August 6, 1949, would be completely exhausted by the end of the year (1949) unless there was a continuing process of development which had continued through the first seven months and which the engineers testified was necessary in order to keep an ore reserve ahead of the actual extraction. This appears to be reasonably necessary when it is taken into consideration that the operators expected and hoped to be in production after the then known ore reserves had been extracted.

(3,4) It is our understanding that the terms "development" and "exploration", although sometimes confused in common speech, are not synonymous. We have gathered from the evidence in this case that "exploration" refers solely to an effort to find additional tonnage and consists almost exclusively of diamond drilling and sampling; whereas "development" refers to the steps necessarily taken to reach the ore in a mine so that it can be mined and consists of running drifts, crosscuts and raises through the ore zone with some diamond drilling. It is also made to appear that development work as herein defined is not synonymous with "extraction." The engineers in this case allowed for extraction $9.89 a ton and the items allowed for development were in addition to the extraction costs.

In our case of State Tax Commission v. Magma Copper Co., supra, it was pointed out that in order to determine the value of a mine, it was essential to discover the cost of production which was properly chargeable against the gross value of the product. In this case the court referred to the cost of extraction, reduction and selling of the product without differentiating between "development" costs and "extraction" costs but recognizing that all the factors of cost had to be considered before the net value of the product could be determined and then conceding that the net profit must first be reduced to its present worth. In that case a charge was made for development work. In referring thereto, the courst said: "If, however, by 'development' costs is meant in reality the work reasonably necessary in order to extract the ore, either proved or probable, for which allowance has already been made in estimating the gross value of the mine, such work is a legitimate charge against such gross valuation."(41 Ariz. 97,15 P2d 963)

In the Magma case the state contended that the trial court had allowed a charge of some $4,000,000 for exploration costs against ore proved and probable without allowing for the ore which might reasonably be expected to be developed by such work on the contention that all the ore calculated by the experts as representing the gross value of the mine was located about the 3,000-foot level while much , if not most, of the allowed charge was for development work to be done below that level and was not necessary to extract the ore credited as the gross value of the mine. In view of the fact that evidence was not sufficiently clear on this point, the judgment was reversed and the case remanded with instructions to retry the issue as to the proper amount to be charged against the gross value of the mine "for exploration or development costs." The court pointed out that it must affirmatively appear that the allowed charge of $4,100,000 for development costs was necess-

ary for the extraction and reduction of the ore credited on the gross value of the mines and that no portion of said $4,100,000 was used for purely exploration work when no allowance was made for the reasonable prospect of finding future ore of a value in a like or greater amount. In the instant case, the engineers testified that the allowance made for development work was absolutely necessary to get at the ores, Positive and probable, beforethey could be extracted. It also affirmatively appears in the judgment that these ores, positive and probable, for which the development allowance was made had been considered and allowance made for them in estimating the gross value of the mine.

The judgment is affirmed.

UDALL, C.J., and STANFORD, J., concur.

PHELPS, Justice (dissenting).

I dissent. I quiteagree with the premise assumed by the majority that a body of ore, however rich in mineral content may be, may be of little or no value when so located that it is not accessible to mining equipment or to a processing plant. And I agree with the converse that the mining equipment or processing plant is likewise of little value except when it is capable of being used for mining and processing of ores and to that extent their proximity and availability for use of each by the other is a proper matter for consideration in arriving at their assessed valuation for taxing purposes.

It is the application of the above principle by the majority opinion to which I object. In my humble judgment the majority opinion has gone beyond the realm of reason and reduces the principle to what appears to me to be an absurdity. To illustrate. Let us use the figures incopporated in the majority opinion upon which its conclusion is reached. At the time of the trial in this case on October 14, 1949, and a long time prior thereto the 46,308 tons designated therein in column 1 as "mined" ore had beenpreviously reduced to cash, resulting in a net profit to appellee in thesum of $235,868.64 which it then had in its possession. The remaining 46,980 tons designated as "reserve" was estimated to have a net cash value of $45,100.80 (whether this latter tonnage had xxxx then been reduced to cash the record does not show), making a total of $280,969.44. Appellee then availed itself of the discounts allowed in what is known in mining circles as the Hoskold table to estimate the present cash value of the $280,969.44. The result reached was a present net value of the ore mined and in place, at the time of trial amounting to the sum of $260,158.03. This amount is only approximately $25,000 in excess of the cash then its possession as a result of the conversion of a portion of the ore into cash.

The county assessor had previously and within the time prescribed by law, fixed the assessed value of the plant located upon the property at $146,405. No appeal was taken by appellee from that assessment. It was therefore final and binding upon everyone including appellee. The superior court therefore was wholly without jurisdiction to consider, review, or to change such assessment. Its jurisdiction was limited to a determination of the value of the mine itself as distinguished from the plant. Notwithstanding its lack of jurisdiction it did, in effect, reduce the assessed value of the plant from $146,405.00 to $46,228. It accepted testimony of witnesses for the appellee that the plant had only a junk value of $46,228. It then added this amount to the $260,158.03 and for some reason wholly beyond my power to comprehend, deducted the $146,405.00 from the total leaving a net value of the mine of $159,981.03. This result is reached notwithstanding the fact that the undisputed evidence was to the effect that appellee then had in its possession $235,868.64 cash constituting the net profit derived from the mined tonnage of ore shown in themajority opinion in column 1 of its table. In addition to this, it had $45,100.80 estimated profits from the remaining tonnage in reserve. By themajority opinion this court is holding that $235,868.64 actual cash in hand plus $45,100.60 worth of

ore in reserve has a value of only $159,981.03 for taxing purposes. This method of computation and accounting is not in accord with any mathematical calculation with which I am familiar and has no support from the courts of any other state.

As a further illustration of its unsoundness let us assume that the plant here involved and assessed at $146,405.00 by the county assessor had been owned by John Joe and the mine by appellee during the Year 1949. Could it then be contended that the assessor's valuation of the plant must be deducted from the assessed value of the mine itself. The answer is emphatically "no". How can the union of ownership in the mine and the plant alter the value of each for tax purposes? The answer is, it cannot. In my opinion the most that appellee is entitled to claim as a deduction from its net profits of $260,158.03 (largely reduced to cash) is the reasonable depreciation of the plant caused by its use in mining and processing ore taken from the mine during the year 1949. If plant depreciation was not considered in arriving at the net profits of $235,868.64 for the ore that has been converted into cash as well as the estimated net value of the ore in reserve, I dare say appellee stands alone among the industries of America in failing to avail itself of that legal right.

The assessment of the mine by the Tax Commission finds no support in the records of this case. It was clearly unjustified. It is equally clear to me that the assessed valuation of the mine and plant fixed by the court and sustained by the majority opinion is contrary to the law as established in the cases heretofore decided by this court on the subject and cited by the majority opinion. I think the majority has misinterpreted the language used in those cases.

Without discussing the other question raised, suffice it to say that I concur with Justice DE CONCINI in the views expressed in his dissenting opinion to the effect that the deduction of the development work in the sum of $148,926.60 in arriving at the assessed value of the mine is in direct conflict with the rule laid down in the previous Eagle Picher case decided in 1951, and should not have been allowed.

DE CONCINI, Justice (dissenting).

I add my dissent to that of Mr. Justice PHELPS. I dissent on the following grounds:

The majority opinion 1) disregards res judicata and our statutes; 2) is guilty of judicial legislation; 3) condones double taxation; 4) ignores stare decisis re: "Development" costs.

I will use the terms "court" in referring to the majority opinion; the "state" in referring to appellant; the "company" in referring to the appellee.

Res Judicata and Judicial Legislation.

The following sections of 1939 A.C.A. are pertintent:

Sections 73-106 empowers the tax commission to assess producing mines.

Section 73-202 provides real estate shall be assessed separately from improvements. Real estate includes patented mines.

Section 73-402 empowers county assessors to assess all property except as otherwise required by the State Tax Commission.

According to the law the county assessor assessed the company's improvements and personal property in the sum of $146,405. The company failed to object to the assessment as provided by law to the board of supervisors sitting as a board of equalization in June and again in July of that year. Section 73-419 provides the medthod of appeal from the county board of equalization. The company accepted the assessment of the county assessor and the matter became final and is therefore res judicata.

The company appealed under section 73-110 which provides for an appeal from the state board of equalization which allows the parties to adduce evidence tending to establish #full cash value of the property in question." The company's evidence proved that the value of the ore which was reduced to cash and was on hand as cash was

.....	$235,868.64
Estimated profits on ore reserves.....	45,100.80
Total.....	$280,969.44

The company's contention is that the above figure less Hoskold's discounts and less the assessed value of the plant and equipment plus the salvage value of the plant and equipment, is the true value of the mine. By such calculation we arrive at the following:

Total value of cash and ore on hand less Hoskold discounts	$260,158.03
Less value of plant.....	146,405.00
Actual value of cash and ore.....	$113,753.03
Plus salvage value of plant.....	46,228.00
Total value of cash and ore (i.e. mine).....	159,981.03
Plus value of equipment	146,405.00
Total value, both mine and plant	306,386.03

Such maneuvering amounts to the substitution of the salvage value in place of the assessed value of the plant and personal property, and no amount of argument or explanation can change that simple statement.

By approving such a method of evaluating the mine and plant the court has substituted its own formula in place of what is prescribed by law and therefore the court has disregarded the statutes and is guilty of judicial legislation.

The province of the trial court was to find the value of the ore and cash on hand, and not consider the value of the plant which value was accepted and not appealed from and therefore settled. In order to consider the two values together the statues should be changed by taking the assessment power away from the county assessor and confer it upon the tax commission. Thereby the commission could consider the value of the plant in with the mine. Then upon appeal from the tax commission assessment, the trial court could consider the value of both mine and plant together as it has in this case. However, by so doing it in the instant case it has disregarded the statutes.

Double Taxation.

Paradoxically, the method contended for by the mining company amounts to double taxation. This procedure, contrary to section 73-201 which says "Nothing herein shall be construed to require or permit double taxation" is condoned by this court. Such "double taxation" is contended for by the mining company because by substituting one value for another it actually gives them a tax advantage. To illustrate:

The ore value was found to be which included the value of the plant (According to the court)	$260,158.03

Amt.Brt.Frd.	$260,158.03
In order to find value of ore deduct.....	146,405.00
Actual value of the ore on hand	$113,753.03

Therefore by paying the county treasurer the taxes on the plant, they admit its value and the legality of the tax thereon.

With the value of the cash and ore on hand worth	$113,753.02
the mining company says, and this court agrees with it, that now we have reduced it too much and therefore we should add the salvage value of the plant in the sum of	46,228.00
Total value of cash and ore on hand.....	$159,981.03

Counsel for the mining company in their argument before the court indicated that $5,000 or $10,000 is more nearly the true salvage value of the plant but agreed that the figure of $46,228.00 looked better than the true salvage value. No matter what amount was added, whether it be $5,000 or $50,000, it should not have been added because the mining company already paid the tax on the value of the plant, to wit, $146,405.00, and to add any part of that value to the mine amounts to double taxation, which is contrary to law.

Stare Decisis

The court relies on the former decisions of this court in upholding the trial court, to wit: State Tax Commission v. United Verde Extension Mining Co., 39 Ariz. 136, 4 P.2d 395; State Tax Commission v. Phelps Dodge Corporation, 62 Ariz. 320, 157 P.2d. 693, 694 and State Tax Commission v. Magma Copper Co., 41 Ariz. 97, 15 P.2d 961.

An examination of the first two cases will reveal that the question of the substitution of the salvage value of the plant in the place of the assessor's value was not raised on appeal and was not decided in those cases. The matter was directly raised by assignment of error in the Phelps Dodge case but was never answered by the court except in its statement before it reached the question of assignments of error. In its statement it merely said:"****** It was made to appear from their testimony that the plant, mill, and personal property were of no value,except for slvage purposes, without the mine, and likewise that the mine was of no value without the plant, mill and personal property. To find the 'full cash value' of the mine, as distinct from the plant, mill, and personal property, requires that the amount fixed by the County Assessor, to-wit $3,109,079, as the assessed valuation of the plant, mill, and personal property, be subtracted from the individual estimates of the engineers to arrive at the valuation placed on the mine alone by any particular valuation engineer.******"

The Mining company has cited no authority from other jurisdictions where such a formula is approved, neither has it cited any recognized mining authorities, except during argument counsel referred to mining engineers Hoover and Finlay. An examination of Principles of Mining by Herbert C. Hoover (1909) and the Economics of Mining by Theodore Jesse Hoover (1933) does not reveal any such formula as contended for by the mining companies. The work of Finaly was not available for examination.

The following articles on the "Formulas for Mine Valuation" taken from Mining Scientific Press: June 29, 1918, p. 882; December 27, 1919, p.925; August 21, 1920, p.270; November 23, 1918, p. 682; May 24, 1913, p. 766; May 18, 1918, p. 213, reveal no such formulas.

Apparently Arizona is unique in its method of evaluating producing mines!

The state also assigns as error the fact that the undisputed evidence presented by the company shows that for the last five months of 1949, there was allowed for development work a charge of $129,664.80 against a net profit from the ore bearing that burden of at most $45,100.80. Actually the amount spent for development work was $3.17 per ton on the reserve ore of 46,980 tons or a total of $148,926.60.

The court concludes that this was an allowable deduction from the gross valuation of the ore. To reach this result, they rely on certain language found in State Tax Commission v. Magma Copper Co., supra (41 Ariz. 97, 15 P.2d 962): "If, however, by 'development' costs is meant in reality the work reasonably necessary in order to extract the ore, either proved or probable, for which allowance has already been made in estimating the gross value of the mine, such work is a legitimate charge against such gross valuation."

The majority say:

"It appears to us that the state is confusing the terms 'exploration' and 'development' * * * ", and "It is our understanding that the terms 'development' and 'exploration', although sometimes confused in common speech, are not synonomous. * * *" 241 P.2d 808.

In the recent case of State Tax Commission v. Eagle Picher Mining & Smelting Co., 71 Ariz. 290, 226 P.2d 555,557, decided by this court on January 15, 1951, the same mining company was seeking to allow a charge for development costs of $74,271.00 where but $10,000 (Net Profit) was to be credited for tax purposes. In that case, we held after considering the Magma Copper Co. case and the supposed distinctions, that:

"According to the language used in the Magma Copper Co. case, supra, a mining company is only justified in deducting money, to be spent for development purposes, from the assessed valuation of the mine, where it is shown that the ore to be developed is of greater value than the amount spent for the development of that ore, and this ore value then added to the valuation of the mine.

"In this case, it appears that the trial court found that the net value of the ore to be developed from the expenditure was $10,000.00, whereas in any event, if a deduction is allowed, as was the case here, the value of the ore to be developed must arbitrarily be fixed at a sum not less than the allowed deduction, to wit: $74,271.00, and this figure added to the value of the mine. Of course, if the value of the ore to be developed, exceeded the allowed deduction then such value would be added to the value of the mine."

Had the majority opinion considered the recent Eagle Picher case, supra, it would be impossible to sustain the mining company's contention. Apparently, the Eagle Picher case, supra, is overruled by the court in the instant case, based on the language in the Magma Copper Co. case, which the Eagle Picher case, supra, was supposed to clarify.

If we were to follow the latest Eagle Picher case, then any amount the mining company spends for "exploration and development" and deducts such amount as costs from its gross income, then such amount shall be added to the valuation of the mine even though such "exploration and development" didn't result in the discovery of any new ores. Such a holding is reasonable and correct. That sum ($148,926.60) should be deducted from "cost of production and marketing" and will therefore increase "estimated profit on ore reserves" to $194,027.40

The following tables are presented for comparison - Table I as presented by the mining company; Table II as I think it should be, which shows a gross valuation of mine and plant in the sum of $561,929.43

	TABLE I		TABLE II	
	As Presented		Should Be	
	Mined 46,308 Tons	Reserve 46,980 Tons	Mined 46,308 Tons	Reserve 46,980 Tons
Estimate Value ore reserves	$1,613,531.64	$1,349,735.40	$1,613,531.64	$1,349,735.40
Less cost of Production & Marketing	1,377,663.00	1,304,634.60	1,377,663.00	*1,155,708.00
Estimated profit on ore reserves	235,868.64	45,100.80	235,868.64	194,027.40
Total profit ore reserves		280,969.44		429,896.04
Discounts future Profits to cash value)using Hoskold Table) .92593		260,158.03		**415,524.43
Scrap value of plant @ $50,000. with 4% disct. for 2 yrs. to reduce to cash value 0.92456		46,228.00		None***
Total cash value mine & Equip.		306,386.03		****
Less assessed value of personal property		146,405.00		
Value of mining property		159,981.03		
Plus assessed value of personal property				146,405.00
Value of mining property				$ 561,929.43

* Development costs of reserve ore amounting to 3.17 per ton deducted from cost of production and marketing.

** Hoskold Table used on reserve ore only as mined ore value has been received.

*** Salvage value not applicable as no information showing total value of personal property has been recovered through cost of production & marketing.

DEPARTMENT OF MINERAL RESOURCES
STATE OF ARIZONA

~~XXFIELD ENGINEERS REPORTX~~
NEWS ITEM

Mine San Xavier Mine Date Jan. 11, 1952.

District Pima Mining Dist., Pima Co. Engineer Axel L. Johnson,

Subject: News Item--- Source of Information- Eagle Picher Mining Co.

Location At San Xavier-- 25 miles south of Tucson.

Operators Eagle Picher Mining Co.

Metals Mined Zinc and Lead, mostly all in the form of sulphides.

Men Employed A total of 300 men--- 265 men working in the mine, 30 men in the mill, and 5 men in the office

Production Rate About 270 tons of ore per day mined, and treated in the mill. Total for the month is about 7000 tons of crude ore, from which approximately 900 tons of zinc concentrates and 550 tons of lead concentrates are produced. Ore mined mostly all in form of sulphides of zinc and lead.

Milling Facilities A mill treats the ore as shown above. Custom ores are also treated in this mill, which is located at Sahuarita, Ariz.

Ore Value No information given out.

Miscellaneous Following wages are paid:
Miners --- $13.56 per 8 hr. day.
Muckers--- $12.20 per 8 hr. day.
Timbermen- $14.56 per 8 hr. day.

Year 1950 (continued)

1. <u>San Xavier Mine</u>
2. Pima County, Arizona
3. Submitted by The New Jersey Zinc Company
4. See below
5. " "
6. Silver-lead-zinc-copper

7 and 8.

San Xavier Mine has been examined by Eagle-Picher many times and as far back as 1935, Messrs. Morton, Gregory, Pfrimmer, Duff, Fowler, Hernon and Stone having participated. The property was owned by the New Jersey Zinc Company from 1912 to 1942, at which time Eagle-Picher secured a lease and option from the owner. Intermittent shipments of zinc carbonate ore were made by New Jersey until 1917, at which time they closed the property down due to metal prices and the large amount of water encountered.

At the time Eagle-Picher secured the lease, there were conflicting opinions as to the merits of the property and the projected tonnage involved. Positive tonnage was estimated at 50,000 with the possibility of 25,000 to 50,000 additional tonnage if the ore continued downward but at the insistence of Mr. George W. Potter, vice president of Eagle-Picher at that time, operations were started. To date, almost half a million tons have been produced.

300-A

11/29/48

OPERATIONS AT THE SAN XAVIER MINE

of

THE EAGLE-PICHER MINING AND SMELTING COMPANY

Tucson, Arizona

by

G. W. Irvin*

Mine Engineer

*Member A. I. M. E.

11/1948

LOCATION

The San Xavier Mine of The Eagle-Picher Mining and Smelting Company is located in the Pima Mining District twenty miles southwest of Tucson, Arizona. The mill[1] is located ten miles east of the mine at Sahuarita on the Tucson-Nogales line of the Southern Pacific Railroad.

EARLY OPERATIONS

Before the turn of the century to the end of the first World War, high-grade lead and zinc oxide ores were mined from the upper levels and shipped direct to the smelters. These ores were mined mainly by open stope and shrinkage methods. During this time six shallow shafts were sunk on the property. Five of these shafts are in the eastern part of the mineralized areas. Most of the production was from this area and from the 270-foot level to the surface. The bottom level was 340 feet from the surface but only a small amount of development work had been done here.

The Number 6 shaft in the western part of the mineralized area extended to the 250-foot level and this was operated as a separate unit from the eastern area. The ores from the western area were copper and zinc oxides.

EXTENT OF OPERATIONS

The present mine workings extend horizontally a distance of 2700 feet and vertically 660 feet. At the present time production is obtained from six levels extending from the 200 to the 660. Sinking of the Main shaft

---

[1] Crabtree & Parker - T. P. No. 2193, July 1947 (Short Cut to Metallurgical Accounting).

has again been resumed below the 660 level. Of seven shafts sunk during the life of the mine, only five are in use at the present time. Of these five shafts, one is used for hoisting and four for emergency exits and ventilation. The hoisting or Main shaft is now equipped with a new 72-foot steel headframe and three steel ore bins. Hoisting is done in counter balance, and this new shaft saves one additional hoisting and tramming which obtained under the old setup. Natural ventilation is aided by the use of one 24,000 CFM exhaust type blower placed on the surface.

PRESENT OPERATIONS

In 1942 The Eagle-Picher Mining and Smelting Company acquired the property and, after rehabilitating the mine, began production on a modest scale. Until 1946 they mined the sulfide ores that had been left above the 340-foot level. In May of 1946 a new vertical shaft was started from the 340-foot level and eventually sunk to the 660 foot level. In January of this year this shaft was brought through to the surface and is the one used for hoisting, as mentioned above. Four levels at intervals of 83 feet were started from this shaft. Although the level interval is 83 feet vertically they are approximately 100 feet apart as measured down the average dip of the ore bodies.

Electric power for the mine is generated on the property by five 2-cycle Fairbanks Morse diesel engines that develop a total of 1200 horsepower. Each engine is directly connected to a 3-phase, 60 cycle, 200 volt generator. At the present time, all of the electric power is supplied and used at 220 volts. In the near future, step-up transformers will be installed to furnish 2300 volts for three new 150 H. P. centrifugal pumps to be located on the 910-foot level.

Approximately fifteen tons of water are pumped for every ton of ore hoisted. For this reason 40 per cent of the power that can be generated is connected to the present pumping plant. The addition of the three new pumps will increase this percentage by a considerable amount.

Compressed air for the mine is supplied by two Ingersoll-Rand Imperial Type 10 compressors.

One-inch round lugged steel is used exclusively for all drilling equipment, so that it is unnecessary to have several kinds of steel underground. All of the steel is threaded for jack-bits.

DEVELOPMENT

After the shaft level stations are completed, a cross-cut is driven from the station through the favorable limestone beds. From this cross-cut, drifts are driven east and west through the ore zones. A considerable portion of the lateral development is in ore. After a reasonable amount of development work has been completed, raises are driven to the level above. As the ore bodies have irregular outlines, the raises are not driven at standard intervals. Wherever possible, they are located near the center and on the footwall side of the ore shoots.

Approximately 1000 feet of size EX Diamond Drill holes are drilled every month underground. This drilling is done for geological information on existing and proposed levels. On the lower levels these holes are used to lower the water table gradually so that lateral development will not cause a sudden inflow of water in quantities too great for the pumps to handle.

DRIFTS AND CROSS-CUTS

Untimbered drifts and cross-cuts are usually driven 6 feet wide and 8 feet high. When blocky or otherwise heavy ground is encountered, they are timbered with 8 by 8 timber as shown in Fig. 1. When it is necessary to timber, the drift dimensions are increased one foot each way.

Seventy-five per cent of the drifting is on a contract basis. This is paid at the rate of $8.00 per foot with the company furnishing all of the supplies. Timber is paid for at the rate of $12.50 per set. Most of the mucking in the drifts is done with Eimco mucking machines. In the contract drifts, the contractor places the track and a company pipeman keeps the pipe near the face.

RAISES

The raises are approximately 7 by 5 feet in section. The chute side is separated from the manway by 3-inch lagging supported on 8 by 8 stulls. As the raises seldom exceed 100 feet in length, supplies are hoisted by hand.

Approximately 50 per cent of the raises are driven on contract at a rate of $10 per foot.

STOPING

The mining methods are not standardized but are adapted to the existing conditions in each ore zone.

Most of the ore comes from flat back cut and fill stopes. After a raise is completed through the ore shoot, the stope is silled off 20 feet above the level. A seven-foot horizontal cut is taken through the entire ore body using drifters mounted on vertical bars.

If the horizontal area of the sill exceeds 1000 square feet, another raise may be driven from the level to the stope floor. This raise will be carried up with the stope. After completion of the sill cut, a floor of 3-inch lagging is laid on 8 by 8 stringers which have been placed on 5-foot centers. Fill material is dumped into the raise from the level above and spread over the floor with small air-powered slushers. After the fill has been leveled off within 2 1/2 to 3 feet from the back, a 2-inch floor is laid. The cycle is then repeated, except that the 2-inch floor is removed before the next filling cycle beings. Whenever necessary, a stull or crib is used to support the back. If the back becomes too heavy, square sets may have to be resorted to. In the smaller stopes the broken muck is shoveled directly into the chutes. In the larger stopes the ore is transported to the chutes either by slushers or in wheelbarrows equipped with pneumatic tires.

Square-set stopes are silled off on the level and are carried up with horizontal cuts the same as the cut and fill stopes. Usually a cut can be completed before it is necessary to fill. If the back becomes too heavy, the sets are tightly filled leaving one row open for access to the working face. Square-set timbers are shown in Fig. 2. The floor pillars under the cut and fill stopes are mined out by square setting after the stope from the level below is completed. Vertical pillars of ore are not left between stopes.

In the Number 1 ore zone 200 feet west of the Main shaft and on the foot wall side of the mineralized limestone area, a few open stopes have been used. In this area the ore occurs as pockets of considerable lateral area and may extend a short distance above or below the level. When one of these areas is encountered, it is silled off on the level with a drifter

and the broken ore mucked into cars with a mucking machine. The ore left in the back is then drilled with a stoper and blasted. If a third cut is necessary, it can be drilled from the top of the muck pile. If the ore extends a short distance below the level, it is taken out with jack-hammers. If it should extend several feet below the level, a raise is driven from the level below and the ore mined by cut and fill method.

Stopes are filled mainly with waste material obtained from development headings. When the supply of waste that can be obtained from the development headings is insufficient, a power shovel on the surface loads waste into a dump truck. This is then hauled and dumped into a waste pass extending to all levels with discharge chutes as required.

Occasionally sand from a nearby arroyo has been loaded for filling in the same manner and dumped into an 8-inch churn drill hole. From a chute under this hole the sand is trammed to the places needed. The sand makes the best filling, as it is easy to spread in a stope. However, it must be very dry in order to pass through the drill hole.

TRAMMING

Underground tramming is done here by hand or with two 1 1/2 ton Mancha locomotives. The Main shaft hoisting cages are of sufficient size so that these locomotives are quickly moved from one level to another during the shift. The Eimco mucking machines are readily moved in the same manner. Cars are of 16 cubic feet capacity, turntable mounted, end dump, with roller bearing wheels.

Ore is transported from the mine bins to the mill in 18-ton dump trucks.

WATER CONDITIONS

After the mine was pumped out in 1943, water produced amounted to approximately 35 gallons per minute. As development work was extended on the then lowest level, or 340, additional sources of water were tapped. As new and deeper levels were opened up in the new shaft, a considerable quantity of water was encountered. Some of these sources, when struck with a diamond drill, produced pressures estimated to be as great as 200 p.s.i. At the present time the mine is making approximately 730 G.P.M.

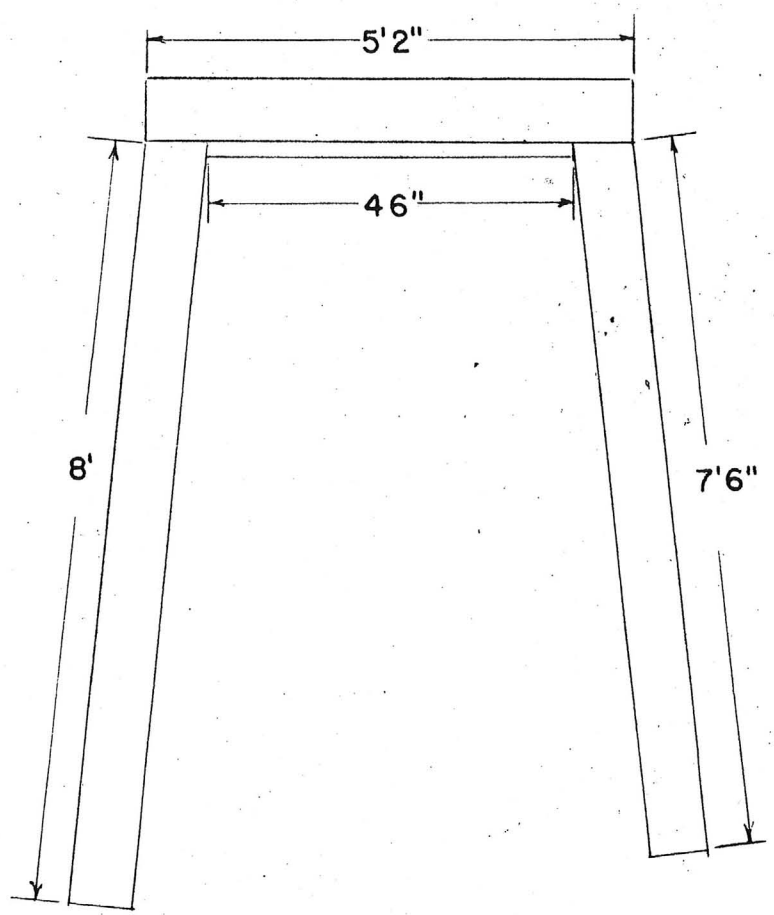

FIG. 1

Standard drift sets made with 8 by 8 timber. The 8 foot post goes on the ditch side of the drift. The 2 by 8 cleat is nailed to the bottom of the cap. Standard batter for the posts is 1½ inches per foot.

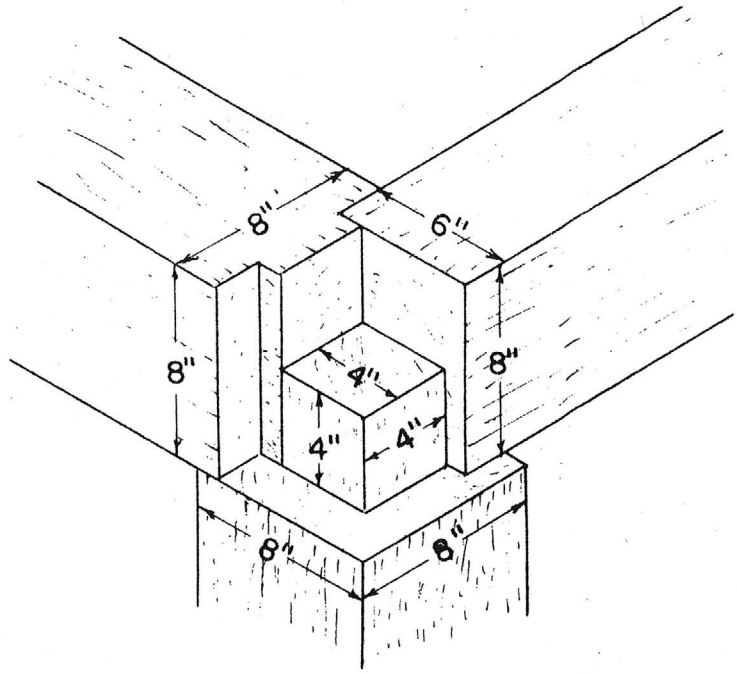

FIG. 2

Standard timber framing with post butting cap. The sets are 5 feet center to center horizontally. The stope posts are 6 feet long between the horns or 6 feet 8 inches over all. Sill posts for square set timbering are 7 feet long between the horns.

CROSS-SECTION TYPICAL FOOTWALL

CUT & FILL STOPE

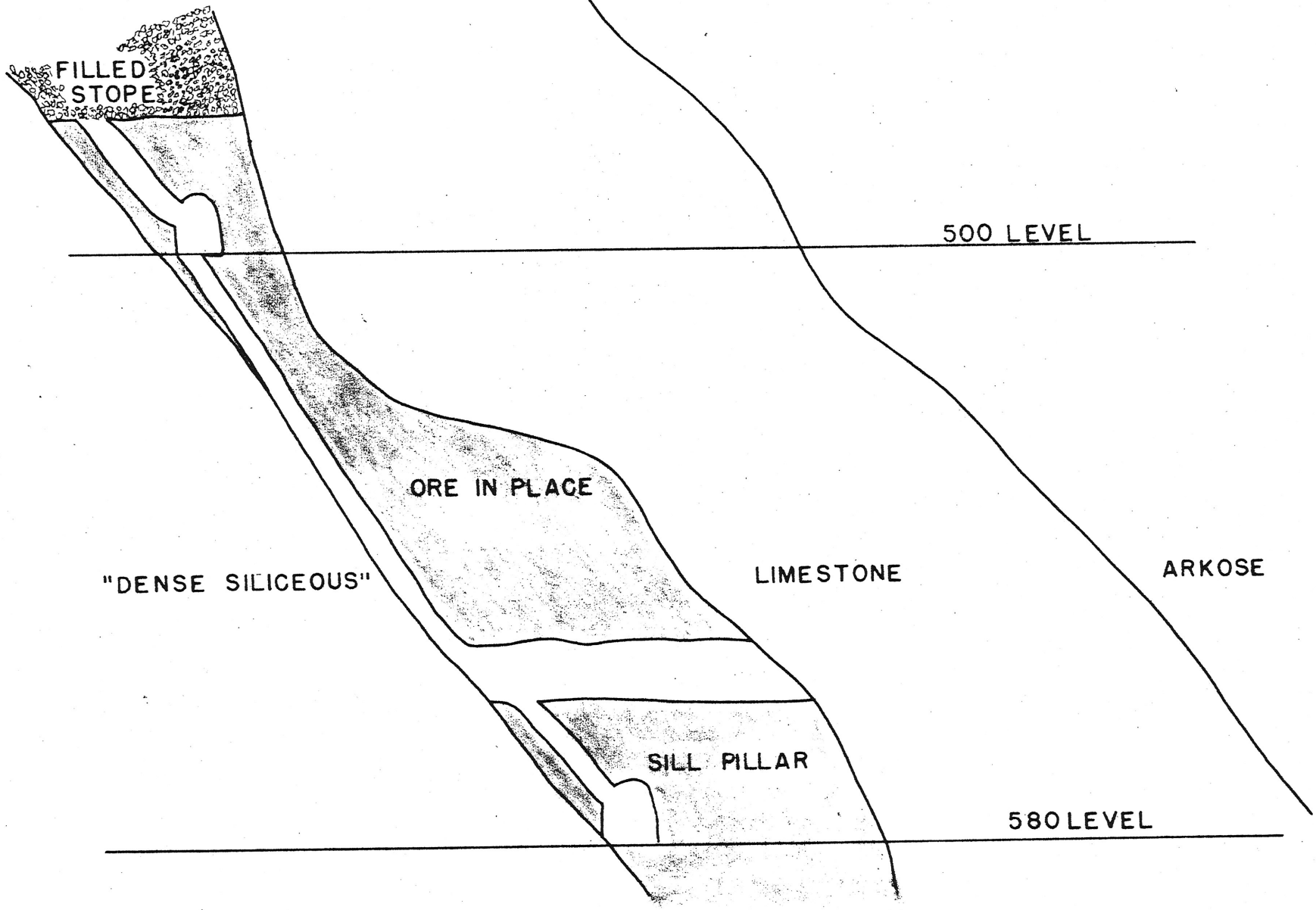

FIG. 3

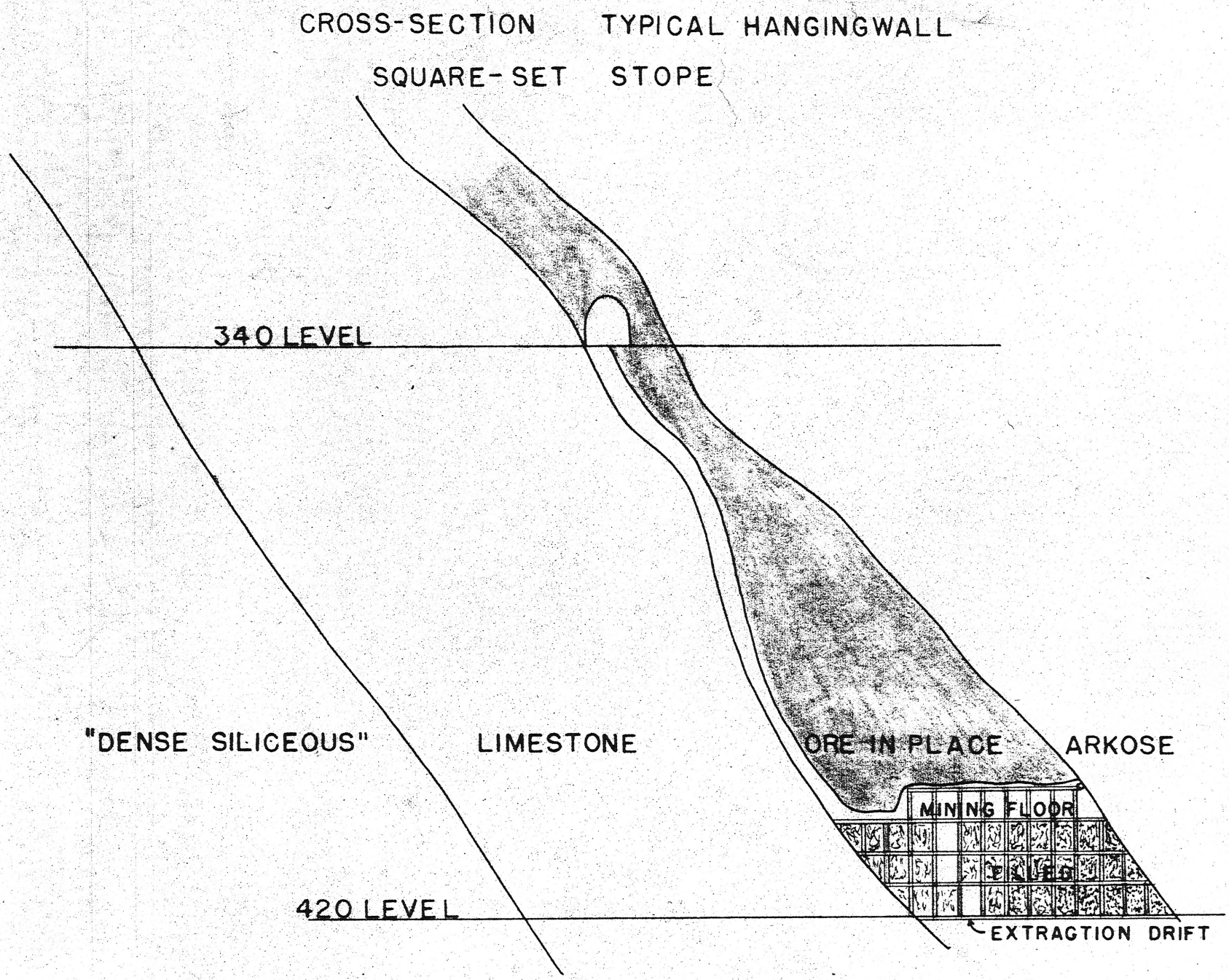
CROSS-SECTION TYPICAL HANGINGWALL
SQUARE-SET STOPE
340 LEVEL
"DENSE SILICEOUS"
LIMESTONE
ORE IN PLACE
ARKOSE
MINING FLOOR
FILLED
420 LEVEL
EXTRACTION DRIFT

FIG. 4

Premium Survey file

REPT. MINERAL RESE
RECEIVED
NOV 21 1946
PHOENIX, ARIZONA

NAME OF COMPANY Eagle-Picher Mining & Smelting Co.

NAME OF MINE San Xavier Mine, Pima County, Arizona

(1) Production - January 1st to June 30, 1946, inclusive.

Producers shipping ore direct to smelters or to custom mills use Column No. 1; producers operating their own mill use Column No. 2.

COLUMN NO. 1	Tons	% Cu	% Pb	% Zn
Crude Ore				

COLUMN NO. 2	Tons	% Cu	% Pb	% Zn
Copper Conc.	-			
Lead Conc.	2449	4.27	54.42	9.05
Zinc Conc.	4384	1.01	4.35	52.02

(2) Average Price Received for Metals in Above Production

This to be the total of the ceiling price plus premiums.

Copper	17.00 ¢/lb.	Conn. Valley as base
Lead	9.59 ¢/lb.	N.Y. as base
Zinc	11.00 ¢/lb.	East St. Louis as base

(3) What do you estimate your production would have been, January 1st to June 30, 1946, if the metal price had been:

Cu 14 3/8¢/lb. Conn. Valley; Lead 8.25¢/lb. N.Y.; Zinc 8.25¢/lb East St. Louis (with no premiums)

COLUMN NO. 1		COLUMN NO. 2		
Crude Ore	Tons	Copper Conc.	None	Tons
		Lead Conc.	None	Tons
		Zinc Conc.	None	Tons

(4) What do you estimate your production would have been, January 1st to June 30, 1946, if the metal prices had been:

Cu 16¢/lb. Conn. Valley; Lead 11¢/lb. N.Y.; Zinc 9.50¢/lb. East St. Louis (with no premiums)

COLUMN NO. 1		COLUMN NO. 2		
Crude Ore	Tons	Copper Conc.	None	Tons
		Lead Conc.	None	Tons
		Zinc Conc.	None	Tons

(5) If a metal Conservation Price Plan, similar to the present Premium Price Plan, were made permanent for at least five years,

(a) What would your yearly production of ore or concentrates be: Same as present.

(b) Would such a plan cause you to expand your exploration-development program? If so, how much? --At least double.

(c) What effect would such a plan have in increasing your ore reserves? Indefinite.

(d) In view of low tariffs, how would such a plan promote a healthy mining industry? By allowing an adequate return on marginal ores.

DEPARTMENT OF MINERAL RESOURCES

REPORT TO OPA ON ACTIVE MINING PROJECT

Date: 5/30/45

Name of Mine: Eagle Picher

Owner or Operator:

Address: 73 Pa Court

Mine Location: San Xavier dist

Filing Information

File System:

File No.:

This chart to be used for gallons of gasoline required per month.

PRESENT OPERATIONS: (check X)

Production.....; Development.....; Financing.....; Sale of mine.....;

Experimental (sampling).....; Owner's occasional trip.....;

Other (specify).....

PRODUCTION: **Past and Future.**

	Tons
Approx. tons last 3 months	
Approx. present rate per 3 months	
Anticipated rate next 3 months	
If in distant future check (X) here	

EQUIPMENT OPERATED:

Type	Quantity or Horse Power	Miles or Hours Per Month	Gallons Required Per Month gals
Personal Cars			
Light or Service Trucks			
Ore Hauling Trucks			
Compressors	Equipment in Supplies		379 gals
Other Mine or Mill Eqpt.			

PRODUCT PRODUCED OR CONTEMPLATED: Name metals or minerals.

REMARKS:

ARIZONA DEPARTMENT OF MINERAL RESOURCES

By: George A. Phillips

DEPARTMENT OF MINERAL RESOURCES

REPORT TO OPA ON ACTIVE MINING PROJECT

Date: 12-9-44

Name of Mine: Sky Ranch

Owner or Operator: Eagle Picher Min & Smelting Co

Address: P.O. Box 1318 Tucson

Mine Location: Sky Ranch

Filing Information

File System:

File No.:

This chart to be used for gallons of gasoline required per month.

PRESENT OPERATIONS: (check X)

Production ✓; Development ; Financing ; Sale of mine ;

Experimental (sampling) ; Owner's occasional trip ;

Other (specify)

PRODUCTION: Past and Future.

	Tons
Approx. tons last 3 months	
Approx. present rate per 3 months	
Anticipated rate next 3 months	150 tons per day
If in distant future check (X) here	

EQUIPMENT OPERATED:

Type	Quantity or Horse Power	Miles or Hours Per Month	Gallons Required Per Month
Personal Cars			
Light or Service Trucks	Ford 37 - 1/2 ton		375 gal per yr
Ore Hauling Trucks			
Compressors			
Other Mine or Mill Eqpt.			

PRODUCT PRODUCED OR CONTEMPLATED: Name metals or minerals.

Lead Zinc Copper

REMARKS:

ARIZONA DEPARTMENT OF MINERAL RESOURCES

By George A. Wallace

NAME OF MINE:

COUNTY:
DISTRICT:
METALS:

OPERATOR AND ADDRESS:		MINE STATUS	
DATE:		DATE:	
	Eagle-Picher Mining & Smelting Co Joel Bowlby, Pres. D. C. McKallor, Gen. Mgr. American Bldg. Cincinnati, O. E. D. Morton, Mgr. Western Ops. Rt. 2, Box 625 Tucson, Ariz. Sam Duff, Mine Supt. San Xavier Mine Ruby Star Rt. Tucson, Ariz. E. H. Crabtree Jr., Mill Supt. Sahuarita, Ariz.		

NAME OF MINE: SAN XAVIER
(Eagle Picher)

COUNTY: PIMA
DISTRICT:
METALS: PB,ZN

OPERATOR AND ADDRESS:		MINE STATUS	
DATE:		DATE:	
5/1/44 9/45	E. D. Morton, Gen. Mgr. Box 1268, Tucson G. Duff, ~~San Xavier~~ Sahaurita	5/1/44	Milling

SAN XAVIER EXT.

Cu, Pb, Zn

Pima 10 - 6 T 17 S, R 12 E

R. K. Shelton, Tucson '42

SAN XAVIER TERRITORIAL REPORT OF THE GOVERNOR 1899

The old San Xavier lead, zinc, copper, and silver mine, which has been idle for years, is now (1899) being worked and is producing. 7

Eagle-Picher Mining and Smelting Co
Ruby Star Route - Tucson - Ariz -

The property is known as the San Xavier, and sometimes called Old Empire Zinc Co.

It is located 26 miles south of Tucson Arizona.

It has, in the past, produced a large tonnage of lead-zinc-copper ore, but was closed down during the low price of metals.

The Eagle-Picher Co. is now bringing this property back into the active class. Construction work is going on, and the mine is being dewatered.

The ores carry 15% zinc to 20% zinc, with some lead and copper.

When the water is out, and ore bodies made mineable, the company plans putting on a flotation mill.

38 men are employed and Mr L. E. Sullivan is superintendent.

Mill of 100T capacity is now ready to start off. Mill feed expected to be around 100T per day of Lead-Zinc ore - Combined Value 20 to 25%/T.

EAGLE-PICHER

THE EAGLE-PICHER MINING & SMELTING CO.
GENERAL OFFICES • JOPLIN, MISSOURI

MINING • CONCENTRATING • SMELTING AND REFINING OF ZINC AND LEAD

WESTERN OPERATIONS
P. O. BOX [redacted] 231
TUCSON, ARIZONA

June 13, 1946

DEPT. MINERAL RESOURCES
RECEIVED
JUN 14 1946
PHOENIX, ARIZONA

Mr. Chas. H. Dunning, Director
Department of Mineral Resources
State of Arizona
304 Home Builders Bldg.
Phoenix, Arizona

Dear Sir:

In answer to your letter of June 8, we do have some milling capacity at our Sahuarita plant at this time and would be pleased to receive inquiries from any shippers who might contact you.

We are in a position to handle sulphide ores of copper, lead, and zinc, or any combination of these three minerals but would have to have a substantial sample of the ore to be delivered before acceptance of milling quantities. We are equipped to unload either from Phelps-Dodge-type railroad ore cars or from highway dump trucks.

Yours very truly,

EAGLE-PICHER MINING & SMELTING CO.

G. J. Duff

Arizona Manager

Grover J. Duff
jph

June 8, 1946

Eagle Picher Mining Co.
Sahaurita, Arizona

Gentlemen:

Will you please advise us as to your present policies or needs regarding custom ores at your Sahaurita plant?

We are often asked if you are in a position to take on new custom shippers and we would like to be as well informed as possible.

Yours very truly,

Chas. H. Dunning
Director

CHD:LP

March 29, 1944

MEMORANDUM

Eagle-Picher mill
(Sahuarita)

MAR 30 1944

To: Director, Dept. Mineral Resources
From: George A. Ballam

There is a rumor here that Eagle-Picher are preparing to take custom ore and that proposed expansion of mill to 400 tons is for this purpose. K.K.Hood of Callahan told me that Bruce said they were planning on shipping ore from Republic and/or Mammoth to the mill. None of the principals concerned will put out any information. I'll try to get a line on it.

Foy is watching developments since nothing has been done yet with the North Star (Contention) where they have some 20,000 tons of copper-zinc ore which might be handled if a copper circuit is planned. Foy, by the way, is still unwatering the Glance. The contractor has had a lot of trouble with corrosion and has had to install special equipment. The water is now at 460 feet and they propose to take it down to the bottom at 625 feet. It is connected with the Queen at 525 so there is a lot of water to lift. They expect to make it accessible for RFC, and cannot answer Bill's question yet.

G A Ballam

Washington, D.C.
Oct. 10, 1943

DEPT. MINES & RESOURCES
OCT 12 1943
PHOENIX, ARIZONA

SUBJECT. Eagle Pitcher mill, Sahuarita, Custom ores.

Mr. Potter has informed Douglas and De Witt Smith that they expect to have sufficient ore from their own mines and they have no desire to expand the plant and operate it as a custom mill.

Bill Broadgate

DEPT. MINERAL RESOURCES
RECEIVED
OCT 2 1943
PHOENIX, ARIZONA

September 30, 1943

MEMORANDUM

Eagle-Picher mill
Sahaurita.

To: Dept. Mineral Resources
From: George A. Ballam

I spent an hour or so looking over the mill on my way to Nogales. Ed. Crabtree wasn't there, but Neil Parker, foreman of the mill showed me through. They were just getting the power turned in and were busy, power, of course from the main line running south of Tucson, and also supplying Ft. Huachuca. This is Parker power over the newly constructed line south from Florence.

The mill is situated just west of the old Tucson smelter slag dump about a mile west of Sahaurita on the Twin Buttes road. Santa Cruz crossing has not yet been put in shape, but a suspension foot-bridge has been erected for employees. Water is obtained from a newly-drilled well some 200 feet deep and Pomona pump furnishes some 300 gpm.

The new feature of underground crushing is employed. The crusher about 30" x 18" Dodge type is sunk about 25 feet in a concrete pit under ramp and ore bins. From crusher ore is conveyed by belt to three-stage sampling plant in tower, with finishing rolls between second and third stages. Stockpile (if and when) ore goes to a series of bins with bottom gates under which dump trucks can be loaded. Mill ore is likewise conveyed to Symons cone crusher thence to 150-ton Allis-Chalmers mill. Following classification and conditioning, treatment is in Denver Sub-A's and American leaf filter from thickener, thence again by belt to concentrate bins with bottom gates. All equipment is new except crusher which has been re-conditioned. All movement is by conveyor belt.

Although no custom ore is yet being accepted and mill is operating entirely on San Xavier ore from the company's mine, it is generally expected that a schedule for custom milling will be out soon. Local authorities know nothing about it yet. However, I noted that provision is being made for a copper circuit, since the lead filter has been partitioned off with necessary arrangements for handling a three-way product. Presumably 150-ton capacity is provided for at present with additional ball mill capacity only necessary for expansion.

Geo

Washington, D.C.
Sept. 26, 1943

RECEIVED
SEP 29 1943
PHOENIX, ARIZONA

SUBJECT: Eagle Pitcher Lead custom milling

I talked to H. DeWitt Smith on this. I gathered that this Company had ducked out of the MRC or RFC financing picture on this venture.

But Smith will look into the matter for me and report soon.

Bill Broadgate

ZONE 6
ZONE 5
ZONE 4
ZONE 3
ZONE 2
ZONE 1
SHAFT NO.6
SHAFT NO.4
SHAFT NO.1
SHAFT NO.7
SHAFT NO.2
SHAFT NO.3
SHAFT NO.5
100 LEVEL
150 LEVEL
250 LEVEL
29-3 RAISE
33
29
19 TO 25
25-4 WINZE
9 TO 13
75 LEVEL
7
30 LEVEL
6
100 LEVEL
140 LEVEL
200 LEVEL
270 LEVEL
340 LEVEL
420 LEVEL
500 LEVEL
4 TO 2
580 LEVEL
660 LEVEL
10
12
740 LEVEL
820 LEVEL
900 LEVEL
PROBABLE GRANITE CONTACT
3500
3400
3300
3200
3100
3000
2900
2800
2700
2600
2500
98,800E
99,000E
99,200E
99,500E
99,700E
100,000E
100,100E
100,400E
100,500E
100,700E
101,000E
SECTION S 59° 30' W
EAST-WEST SECTION
THE EAGLE-PICHER COMPANY
SAN XAVIER MINE
PIMA COUNTY, ARIZONA
SCALE 1" = 100'
MARCH 1953
THIS MAP IS A DIAGRAMMATIC LONGITUDINAL PROJECTION, OUTLINING POSSIBLE AREAS OF FUTURE PRODUCTION. DELINEATION OF STOPE OUTLINES & ORE RESERVES IS OMITTED
BY G.I.

ROLL 8