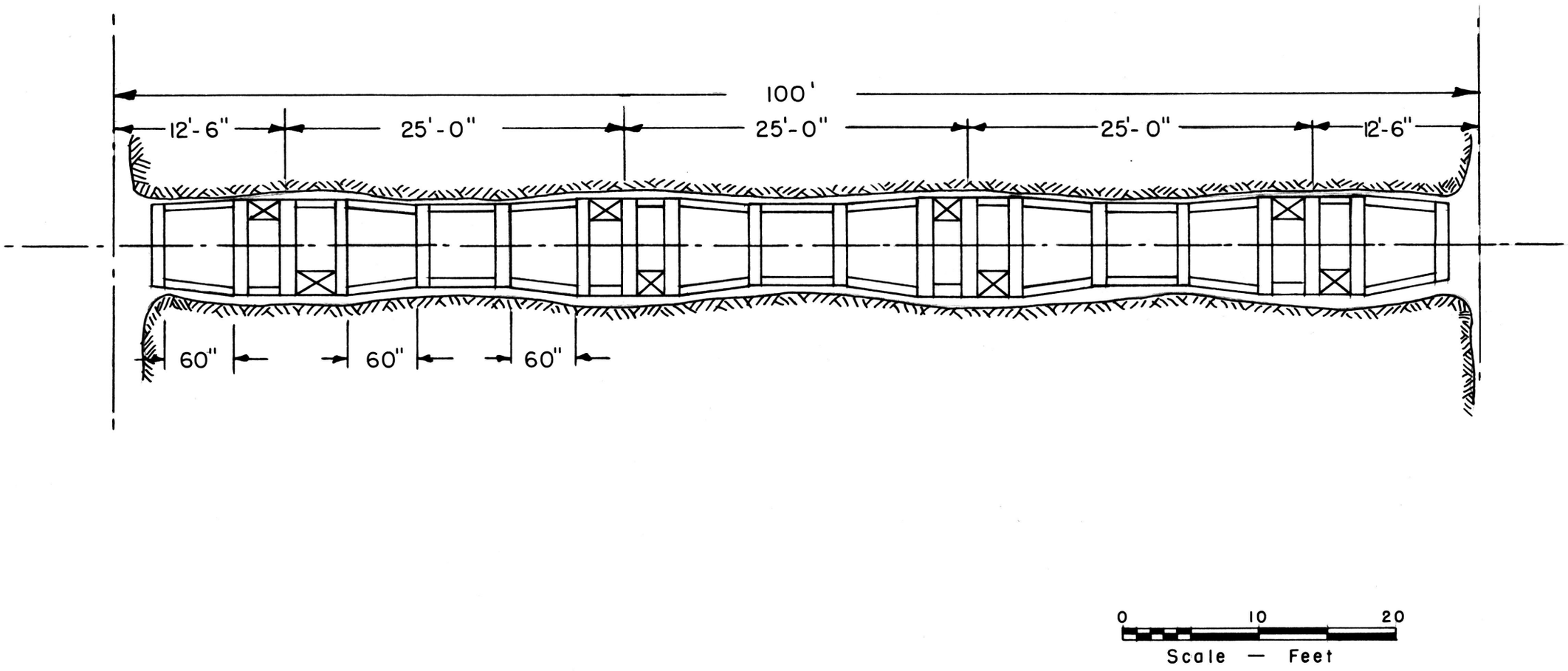

Fig. 8 - Plan of chute and intermediate sets on haulage level, Bagdad mine

REDUCE THIS

TO THIS

167890 Bagdad