CONTACT INFORMATION
Mining Records Curator
Arizona Geological Survey
1520 West Adams St.
Phoenix, AZ 85007
602-771-1601
http://www.azgs.az.gov
inquiries@azgs.az.gov

The following file is part of the

Arizona Department of Mines and Mineral Resources Mining Collection

ACCESS STATEMENT

These digitized collections are accessible for purposes of education and research. We have indicated what we know about copyright and rights of privacy, publicity, or trademark. Due to the nature of archival collections, we are not always able to identify this information. We are eager to hear from any rights owners, so that we may obtain accurate information. Upon request, we will remove material from public view while we address a rights issue.

CONSTRAINTS STATEMENT

The Arizona Geological Survey does not claim to control all rights for all materials in its collection. These rights include, but are not limited to: copyright, privacy rights, and cultural protection rights. The User hereby assumes all responsibility for obtaining any rights to use the material in excess of "fair use."

The Survey makes no intellectual property claims to the products created by individual authors in the manuscript collections, except when the author deeded those rights to the Survey or when those authors were employed by the State of Arizona and created intellectual products as a function of their official duties. The Survey does maintain property rights to the physical and digital representations of the works.

QUALITY STATEMENT

The Arizona Geological Survey is not responsible for the accuracy of the records, information, or opinions that may be contained in the files. The Survey collects, catalogs, and archives data on mineral properties regardless of its views of the veracity or accuracy of those data.

PRINTED: 08/09/2001

ARIZONA DEPARTMENT OF MINES AND MINERAL RESOURCES AZMILS DATA

PRIMARY NAME: LARSON QUARRY

ALTERNATE NAMES:
VERDE GYPSUM
CAMP VERDE GYPSUM
GYPSUM HEART
SUPERIOR COMPANIES GYPSUM
PHOENIX CEMENT GYPSUM

YAVAPAI COUNTY MILS NUMBER: 626

LOCATION: TOWNSHIP 13 N RANGE 5 E SECTION 11 QUARTER NE
LATITUDE: N 34DEG 32MIN 10SEC LONGITUDE: W 111DEG 47MIN 05SEC
TOPO MAP NAME: CAMP VERDE - 7.5 MIN

CURRENT STATUS: PRODUCER

COMMODITY:
GYPSUM
CLAY BENTONITE

BIBLIOGRAPHY:
ADMMR LARSON QUARRY FILE
ADMMR MR-2, AZ INDUSTRIAL MINERALS
ADMMR ACTIVE MINES LIST - '72 - '94
HOSTERMAN,J.W. & PATTERSON,S.H.,1992, BENTONITE & FULLER'S EARTH RESOURCES OF THE U.S., U.S. GEOL. SUR. PROF. PAPER 1522, P. 15, 18

06/14/91

ARIZONA DEPARTMENT OF MINES AND MINERAL RESOURCES FILE DATA

PRIMARY NAME: LARSON QUARRY

ALTERNATE NAMES:
VERDE GYPSUM
CAMP VERDE GYPSUM
GYPSUM HEART

YAVACLY COUNTY MILS NUMBER: 626

LOCATION: TOWNSHIP 13 N RANGE 5 E SECTION 11 QUARTER NE
LATITUDE: N 34DEG 32MIN 10SEC LONGITUDE: W 111DEG 47MIN 05SEC
TOPO MAP NAME: CAMP VERDE - 7.5 MIN

CURRENT STATUS: PAST PRODUCER

COMMODITY:
GYPSUM
CLAY BENTONITE

BIBLIOGRAPHY:
ADMMR LARSON QUARRY FILE
ADMMR MR-2, AZ INDUSTRIAL MINERALS
ADMMR ACTIVE MINES LIST - '72 - 87

06/10/86

ARIZONA DEPARTMENT OF MINES AND MINERAL RESOURCES FILE DATA

PRIMARY NAME: LARSON QUARRY

ALTERNATE NAMES:
VERDE GYPSUM

YAVAPAI COUNTY MILS NUMBER: 626

LOCATION: TOWNSHIP 13 N RANGE 5 E SECTION 11 QUARTER NE
LATITUDE: N 34DEG 32MIN 10SEC LONGITUDE: W 111DEG 47MIN 05SEC
TOPO MAP NAME: CAMP VERDE - 7.5 MIN

CURRENT STATUS: PAST PRODUCER

COMMODITY:
GYPSUM
CLAY BENTONITE

BIBLIOGRAPHY:
ADMMR LARSON QUARRY FILE
ADMMR MR-2, AZ INDUSTRIAL MINERALS
ADMMR ACTIVE MINES LIST - '72

ABSTRACTED FROM ADMMR ACTIVE MINES DIRECTORY, 1992

Larson Quarry file
Yavapai County

SUPERIOR COMPANIES

100 W. Coolidge, Phoenix, AZ 85006 - Phone 230-9300 - Employees: 70.
President Archer V. Shelton
Vice President, Administration Mary Kessler
Vice President, Finance Don Fischer
Camp Verde Gypsum T13N R5E Sec. 11
P.O. Box 308, Cottonwood, AZ 86326 - Phone 567-3854 - Gypsum quarry four miles southeast of Camp Verde - Supplies gypsum to Phoenix Cement Company Plant at Clarkdale - Also used for agricultural and horticultural uses.
General Manager - Verde Valley
Operations Ed Davidson
Maintenance Supervisor Randy Austin
Foreman Bruce McDonald

ABSTRACTED FROM ADMMR ACTIVE MINES DIRECTORY, 1991

SUPERIOR COMPANIES

100 W. Coolidge, Phoenix, AZ 85006 - Phone 230-9300 - Employees: 70.
President ..... Archer V. Shelton
Vice President, Administration ..... Mary Kessler
Vice President, Finance ..... Don Fischer
Camp Verde Gypsum T13N R5E Sec. 11
P.O. Box 308, Cottonwood, AZ 86326 - Phone 567-3854 - Gypsum quarry four miles southeast of Camp Verde - Supplies gypsum to Phoenix Cement Company Plant at Clarkdale.
General Manager - Verde Valley Operations ..... (Currently Vacant)
Maintenance Supervisor ..... Alvin Hazelwood
Production Manager ..... Danny Parker
Foreman ..... Ed Davidson

ABSTRACTED FROM ADMMR ACTIVE MINES DIRECTORY, 1990

SUPERIOR COMPANIES

100 W. Coolidge, Phoenix, AZ 85006 - Phone 230-9300 - Employees: 70.
President ..... Archer V. Shelton
Vice President, Administration ..... Mary Kessler
Vice President, Finance ..... Don Fischer
Camp Verde Gypsum T13N R5E Sec. 11
P.O. Box 308, Cottonwood, AZ 86326 - Phone 567-3854 - Gypsum quarry four miles southeast of Camp Verde - Supplies gypsum to Phoenix Cement Company Plant at Clarkdale.
General Manager - Verde Valley
Operations ..... (Currently Vacant)
Maintenance Supervisor ..... Alvin Hazelwood
Production Manager ..... Danny Parker
Foreman ..... Ed Davidson

ABSTRACTED FROM ADMMR ACTIVE MINES DIRECTORY, 1989

SUPERIOR COMPANIES

100 W. Collidge, Phoenix 85006 - Phone 230-9300 - Employees 70.

President ..... Archer V. Shelton
Vice President, Operations ..... Lester Hall
Vice President, Administration ..... Mary Kessler
Vice President, Finance ..... Don Fischer

Camp Verde Gypsum T13N R5E Sec. 11

P.O. Box 308, Cottonwood 86326 - Phone 567-3854 - Gypsum quarry four miles southeast of Camp Verde - Supplies gypsum to Phoenix Cement Company Plant at Clarkdale.

General Manager - Verde Valley
Operations ..... H. Boyd Snoddy
Maintenance Supervisor ..... Alvin Hazelwood
Production Manager ..... Danny Parker

ABSTRACTED FROM ADMMR ACTIVE MINES DIRECTORY, 1988

SUPERIOR COMPANIES

1700 N. 7th Street #5, Phoenix 85006 - Phone 253-2116 - Employees 70.

President ..... Archer V. Shelton
Vice President, Operations ..... Lester Hall
Vice President, Administration ..... Mary Kessler
Controller ..... Don Fischer

Camp Verde Gypsum T13N R5E Sec. 11

P.O. Box 308, Cottonwood 86326 - Phone 567-3854 (direct Phoenix line 253-5590) - Gypsum quarry four miles southeast of Camp Verde - Supplies gypsum to Phoenix Cement Plant.

General Manager - Verde Valley
Operations ..... H. Boyd Snoddy
Maintenance Supervisor ..... Alvin Hazelwood
Production Manager ..... Danny Parker

LARSON GYPSUM DEPOSIT YAVAPAI COUNTY

Secs. 14, 15, 22, & 23, T13N, R5E

Arizona Republic article concerning this property in ARIZONA GYPSUM CORP. (file) Oct. 7, 1962

LARSON GYPSUM QUARRY YAVAPAI COUNTY

Visited Larson's Gypsum Quarry. Mr. Diehl not at plant, but employee said quarry and plant operating at usual rate. FTJ WR 5-17-71

Active Mine List - October 1972 - Empl. 6

NJN WR 10/2/87: Discussed patent procedures on placer and millsite claims with Mason coggin (card) consultant mining engineer. Mr. Coggin is assistng Superior Companies (card) patent additional claims on their gypsum property (Larson Quarry - file) Yavapai County.

NJN WR 12/4/87: Lester Hall (card) of the Superior Companies (card) reports that at the Larson Quarry (file) Yavapai County has a new production manager, Danny Parker and a new mailing address, P O Box 308, Cottonwood, AZ 86326.

LARSON GYPSUM DEPOSIT YAVAPAI COUNTY

The Verde Gypsum Co. is shipping about 2500 tons a month of gypsum from the Larson deposit east of Camp Verde, Arizona. The production goes to the Phoenix Cement Co. at Clarkdale, the concern which holds the cement contract for Glen Canyon Dam. A new crushing and screening plant was installed recently, making possible more accurate sizing of material. A crew of seven or eight men is employed regularly at the gypsum operation. Gordon R. French is president of the company. Mining World April 1961, p. 28

Bill Kessler, Arizona Gypsum, reported that his company had dropped the option on Wingfields Gypsum in the Camp Verde District. He stated that their new upgrading plant at the Larson Gypsum Mine, was doing quite well. LAS WR 6-30-61

Active October 1961
Active February 1962 - 10 men working
Active Oct. 1962 - 10 men working

Per telephone conversation with William Kessler, Arizona Gypsum Co. - located Secs. 1-2, 11-12, T13N, R5E. LAS WR 5-3-63

Active Mine List Oct. 1963 - 7 men

Visited Larson Quarry and Plant of Verde Gypsum Co. 4 men working. EGW WR 9-15-64

Active Mine List Oct. 1966 - 6 men - Woodrow Diehl, Supt.

The Larson Quarry and Plant, Camp Verde, is operating at their usual rate. FTJ QR 4-1967

Visited Larson Quarry at Camp Verde - operation at regular rate. FTJ WR 9-15-67

Active Mine List Nov. 1967 - 5 men
Active Mine List April 1968 - 5 men

Interviewed Woody Diehl at Larson Quarry. All their production is sold to Phoenix Cement at Clarkdale. FTJ WR 9-13-68

Active Mine List Oct. 1968 - 5 men
Active Mine List April 1969 - 5 men - Woodrow Diehl, Supt. Arizona Gypsum Corp.

Visited Larson Quarry and Plant. Mr. Diehl was out - talked to workman who said operations normal. FTJ WR 9-12-69

Active Mine List Oct. 1969 - 6 men - Woodrow Diehl, Supt.
Active Mine List May 1970 - 6 men - " " "
Active Mine List Oct. 1970 - 6 men - " " "

Yavapai-Apache Nation

Phone: (928) 567-3649 Fax: (928) 567- 3994

May 27th, 2004

VIA FACSIMILE and US MAIL

Mr. Michael J. Rice, Manager
ARIZONA STATE LAND DEPARTMENT
1616 West Adams Street
Phoenix, Arizona 85007

Re: Mineral Leases 11-1579 through 11-1594

Dear Mr. Rice:

The Yavapai-Apache Nation is in receipt of your letter dated April 19th, 2004, and in our opinion, which is shared by our legal counsel, the Arizona State Land Department is in serious error in its stated position for the following reasons, as described below.

The above numbered Mineral Leases are 20 year leases, which began in 1961, were renewed in 1981 and the Phoenix Cement Company has a pending application for a renewal of those leases for another 20 years. Your letter refers to **ARS §27-254** as the statute for preferred rights for renewal of leases. That is incorrect. The correct statute regarding preferred rights for renewal of leases is **ARS §37-291.**

Furthermore, subsection A. of **ARS §37-291** limits such renewals to a term of ten years, and subsection B. specifically states as follows: ***The preferred right of renewal shall not extend to a lessee who has not substantially complied with the terms of his lease or who has not placed the land to the use prescribed in the lease during its term or with the time prescribed***...It appears then that the previous renewals are questionable at the very least.

As the Arizona State Land Department must be aware, most, if not all of the property within the leases has ***not*** been used for the mining of gypsum, *as prescribed in the lease*. The current lessee owns and leases other properties nearby and it is on those properties that the gypsum is being mined, not on the property that is the subject of the leases. **ARS §37-291 commands that the right of renewal not be extended to such a lessee.**

In addition, your letter also makes reference to **ARS §37-284** A, which is also incorrect because that statute specifically addresses leases of only ten years or less. Since these leases are for commercial purposes for more than 10 years, **ARS §37-281.02** applies. That statute is entitled **Leasing state lands for commercial purposes for more than ten years.**

Subsection A. of this statute states: ***All state lands are subject to lease as provided in this article for a term in excess of ten years, but not more than ninety-nine years, for commercial purposes to the highest and best bidder at public auction.*** We do not believe that the state has ever held such a public auction for the mineral leases under consideration.

In conclusion, the Yavapai-Apache Nation believes that the Arizona State Land Department appears to be shirking its fiduciary duty to produce the maximum income possible from the state trust lands. It is clearly evident that only minimum royalties have been paid on these leases for over 40 years by a lessee who has not placed the land to the use prescribed in the lease. The time has come for that to end. You must surely realize, the offer to sell gypsum by Phoenix Cement Company is a hollow one, because this gypsum does not even come from the property which is the subject of these Mineral Leases.

Please advise us within 15 days of the date of your receipt of this letter if the Arizona Sate Land Department is going to hold an auction, and if not, whether the Department maintains its position that the Yavapai-Apache Nation has no right to a hearing.

The Yavapai-Apache Nation is prepared to exercise its legal remedies, not only to have the Mineral Leases brought to public auction, but also to obtain the maximum income from the Nation's aboriginal lands for the benefit of all.

Sincerely,

Jamie Fullmer, Chairman

JF:crt

Cc: Governor Janet Napolitano
Ann Marie Downes, Public Advisor, Tribal Affairs
Theodore Smith, Sr., EDA Director
Rene Toman, EDA Administrator

Janet Napolitano
Governor

Mark Winkleman
State Land
Commissioner

Arizona
State Land Department

1616 West Adams Street Phoenix, AZ 85007 www.land.state.az.us

April 19, 2004

Ms. Rene Toman, Administrator
Economic Development Authority
Yavapai-Apache Nation
2400 West Datsi Street
Camp Verde, Arizona 86322

CERTIFIED: 7000 0600 0026 0577 7267

Re: Mineral Leases 11-1579 through 11-1594

Dear Ms. Toman:

In regard to the March 4, 2004 letter from the Yavapai-Apache Nation contesting renewal of the captioned lease agreements, please note that the Department is not in a position to consider issuance of the leases to the Yavapai-Apache Nation. As discussed in our phone conversation of April 12, 2004, the request cannot be considered for the following reasons.

On October 9, 2001, the Salt River Pima-Maricopa Indian Community, doing business as Phoenix Cement Company, filed renewal applications for the captioned mineral leases. Being filed not less than thirty days nor more than sixty days prior to the expiration of the leases on November 16, 2001, Phoenix Cement Company has a preferred right to renew the leases (ARS §27-254). Pursuant to the general authority provisions of Title 37, a conflicting application must be filed at least 270 days but not more than one year before the expiration data of the lease (ARS §37-284.A). In light of the fact that the Yavapai-Apache Nation has filed no conflicting applications and cannot now file applications in a timely manner, the Department believes the Yavapai-Apache Nation has no right, duty or privilege affected by issuance of the leases to Phoenix Cement Company. In addition and separately, there is a no right to a hearing concerning issuance of these leases prior to a formal decision by the Department. We will therefore not proceed with your request for a contested case hearing.

In closing and as you are aware, Phoenix Cement Company has indicated in their letter dated April 1, 2004, that they would welcome the opportunity to increase sales of gypsum from their Camp Verde facility. In light of the circumstances noted above, the Department believes the Yavapai-Apache Nation should pursue arrangements with Phoenix Cement Company.

Sincerely,

Michael J. Rice, Manager
Minerals Section
Natural Resources Division

MJR:cam

c: Phoenix Cement Co.

Janet Napolitano
Governor

Mark Winkleman
State Land
Commissioner

Arizona State Land Department

1616 West Adams Street Phoenix, AZ 85007 www.land.state.az.us

April 19, 2004

Ms. Rene Toman, Administrator
Economic Development Authority
Yavapai-Apache Nation
2400 West Datsi Street
Camp Verde, Arizona 86322

CERTIFIED: 7000 0600 0026 0577 7267

Re: Mineral Leases 11-1579 through 11-1594

Dear Ms. Toman:

In regard to the March 4, 2004 letter from the Yavapai-Apache Nation contesting renewal of the captioned lease agreements, please note that the Department is not in a position to consider issuance of the leases to the Yavapai-Apache Nation. As discussed in our phone conversation of April 12, 2004, the request cannot be considered for the following reasons.

On October 9, 2001, the Salt River Pima-Maricopa Indian Community, doing business as Phoenix Cement Company, filed renewal applications for the captioned mineral leases. Being filed not less than thirty days nor more than sixty days prior to the expiration of the leases on November 16, 2001, Phoenix Cement Company has a preferred right to renew the leases (ARS §27-254). Pursuant to the general authority provisions of Title 37, a conflicting application must be filed at least 270 days but not more than one year before the expiration data of the lease (ARS §37-284.A). In light of the fact that the Yavapai-Apache Nation has filed no conflicting applications and cannot now file applications in a timely manner, the Department believes the Yavapai-Apache Nation has no right, duty or privilege affected by issuance of the leases to Phoenix Cement Company. In addition and separately, there is a no right to a hearing concerning issuance of these leases prior to a formal decision by the Department. We will therefore not proceed with your request for a contested case hearing.

In closing and as you are aware, Phoenix Cement Company has indicated in their letter dated April 1, 2004, that they would welcome the opportunity to increase sales of gypsum from their Camp Verde facility. In light of the circumstances noted above, the Department believes the Yavapai-Apache Nation should pursue arrangements with Phoenix Cement Company.

Sincerely,

Michael J. Rice, Manager
Minerals Section
Natural Resources Division

MJR:cam

c: Phoenix Cement Co.

Arizona State Land Department
Public Records Request

I. This request is made to review and/or reproduce the following public record(s): *Specify lease, permit or document name/number or legal description.* (Attach 8.5" x 11" sheet if necessary). Re-file all documents in the same order as removed. If staples are removed for copy purposes, please put documents back together exactly as they were and place them back in the file in the same place and order as you found them. **Public Records staff will inspect the files for compliance prior to refiling.** *NOTE: Public records are protected under Arizona laws and irreplaceable if lost or stolen.*

11-
Mitera Lease Nos 1579-1594

☐ ✓**if additional files are listed on the back of this for**

II. Indicate the intended use of public records copies:

Research

ROBERT S. PORTER
ATTORNEY AT LAW

PORTER LAW FIRM PLC

2810 NORTH 3RD STREET
SUITE 103
PHOENIX, ARIZONA 85004
TELEPHONE (602) 468-3540
FAX (623) 321-1925
BOB@PORTERLAW.BIZ

$.25 per page - if customer copi
$1.00 per page - if Public Records staff copies for you

CONTACT INFORMATION:

Please Print:

Name: Bob Porter
Representing: AHS
Address: 2810 N 3rd St Suite 103 Phx 85003

Phone: 602 468 3540
Fax: " 277 4590
E-mail: bobe porterlaw.biz

Robert S Porter
Requesting Party Signature

4-12-4
Date

Pursuant to A.R.S.§38-421(A) & (B) in part: **A person who unlawfully destroys, mutilates, defaces, alters, falsifies, removes or secretes part or all of any public record is guilty of a Class 6 FELONY.**

SRMG
Salt River Materials Group

Phoenix Cement Company • Salt River Sand & Rock

Aggregates • Construction • Fly Ash • Phoenix Cement™

Hand Delivered
M. Rice

April 1, 2004

Michael Rice, Minerals Section Manager
Arizona State Land Department
Natural Resources Division
1616 West Adams
Phoenix, Arizona

Dear Mr. Rice:

It has come to our attention that you have recently received a letter from Mr. Jamie Fullmer, Chairman of the Yavapai-Apache Nation, concerning certain mineral rights and applications for renewals by Phoenix Cement Company.

We received a copy of the letter from a consultant who works for the company and regularly monitors activities involving our industry. We are concerned with a number of inaccuracies that the letter contains. Specifically, we have not refused to sell gypsum to anyone, and would, in fact, welcome the opportunity to increase our sales from our existing Camp Verde facility. Secondly, there are a number of other gypsum producers in the Southwest from whom Drake Cement can purchase the mineral, and we would be happy to produce a list of such producers if you so desire. Finally, the reference to Mineral Lease Nos. 1579 – 1594 is incorrect. Phoenix Cement has extracted gypsum from those leases and will extract from them in the future.

We appreciate the opportunity to bring the facts to the table in these matters.

Sincerely,

Bruce Dyer
Vice President

ARIZONA
STATE LAND
DEPARTMENT
2004 APR -8 AM 8:50

33

100

FedEx Express *USA Airbill* FedEx Tracking Number 8425 3798 0593

SAC 11

Form ID No. 0215 Recipient's Copy

NO POUCH NEEDED.
See back for peel and stick application instructions.

RECIPIENT: PEEL HERE

1 From This portion can be removed for Recipient's records.

Date 5-27-04 FedEx Tracking Number 842537980599

Sender's Name Peggy WHITE Phone 928 567-1056

Company YAVAPAI APACHE TRIBE

Address 2400 W DATSI ST

Dept./Floor/Suite/Room

City CAMP VERDE State AZ ZIP 86322-8412

2 Your Internal Billing Reference

3 To

Recipient's Name MICHAEL J. RICE Phone

Company AZ STATE LAND DEPARTMENT

Address

To "HOLD" at FedEx location, print FedEx address. We cannot deliver to P.O. boxes or P.O. ZIP codes.

Address 1616 WEST ADAMS ST.

Dept./Floor/Suite/Room

City PHOENIX State AZ ZIP 85007

8425 3798 0593

0255758941

4a Express Package Service *Packages up to 150 lbs.* Delivery commitment may be later in some areas.

- [x] FedEx Priority Overnight — Next business morning
- [ ] FedEx Standard Overnight — Next business afternoon
- [ ] FedEx First Overnight — Earliest next business morning delivery to select locations
- [ ] FedEx 2Day — Second business day
- [ ] FedEx Express Saver — Third business day

FedEx Envelope rate not available. Minimum charge: One-pound rate

4b Express Freight Service *Packages over 150 lbs.* Delivery commitment may be later in some areas.

- [ ] FedEx 1Day Freight* — Next business day
- [ ] FedEx 2Day Freight — Second business day
- [ ] FedEx 3Day Freight — Third business day

* Call for Confirmation:

5 Packaging * Declared value limit $500

- [x] FedEx Envelope*
- [ ] FedEx Pak* — Includes FedEx Small Pak, FedEx Large Pak, and FedEx Sturdy Pak
- [ ] Other

6 Special Handling Include FedEx address in Section 3.

- [ ] SATURDAY Delivery — Available only for FedEx Priority Overnight and FedEx 2Day to select ZIP codes
- [ ] HOLD Weekday at FedEx Location — Not available for FedEx First Overnight
- [ ] HOLD Saturday at FedEx Location — Available only for FedEx Priority Overnight and FedEx 2Day to select locations

Does this shipment contain dangerous goods? One box must be checked.

- [x] No
- [ ] Yes — As per attached Shipper's Declaration
- [ ] Yes — Shipper's Declaration not required
- [ ] Dry Ice — Dry Ice, 9, UN 1845 ____ x ____ kg

Dangerous Goods (including Dry Ice) cannot be shipped in FedEx packaging. [ ] Cargo Aircraft Only

7 Payment *Bill to:* Enter FedEx Acct. No. or Credit Card No. below. Obtain Recip Acct. No. [ ]

- [x] Sender — Acct. No. in Section 1 will be billed.
- [ ] Recipient
- [ ] Third Party
- [ ] Credit Card
- [ ] Cash/Check

Total Packages | Total Weight | Total Charges | Credit Card Auth.

†Our liability is limited to $100 unless you declare a higher value. See the *FedEx Service Guide* for details.

8 Release Signature *Sign to authorize delivery without obtaining signature.*

By signing you authorize us to deliver this shipment without obtaining a signature and agree to indemnify and hold us harmless from any resulting claims.

Questions? Visit our Web site at fedex.com or call 1.800.Go.FedEx® 800.463.3339.

SRF • Rev. Date 4/02 • Part #157610S • ©1994–2002 FedEx • PRINTED IN U.S.A.

447

I. SUMMARY

Mineral Lease Application: 11-001579

Lessee: Phoenix Cement Company
P. O. Box 428
Clarkdale, Arizona 86324
(928) 2634-2261

Location: Sections 2, T13N; R5E
Yavapai County, Arizona

Lease Term: 11/17/1961 to 11/16/2001 (Expired)
Renewal Application Pending

Commodity(s): ~~Purple Slate~~ Gypsum

Current Status: Producing

Historical Production: 203,674 tons from 1966 to present; avg. 5,360 tons per year

Ownership: Surface - U.S. Forest Service
Mineral - State of Arizona

Total Acreage: 200 **Number of Leases:** 1

Dates of Inspection: 03/17/62, 03/22/79, 02/02/82, 03/24/92, 03/29/93

Lease Rental: To be determined based on appraisal.

FIGURE 2
DETAIL LOCATION
SUPERIOR COMPANIES
11-1579

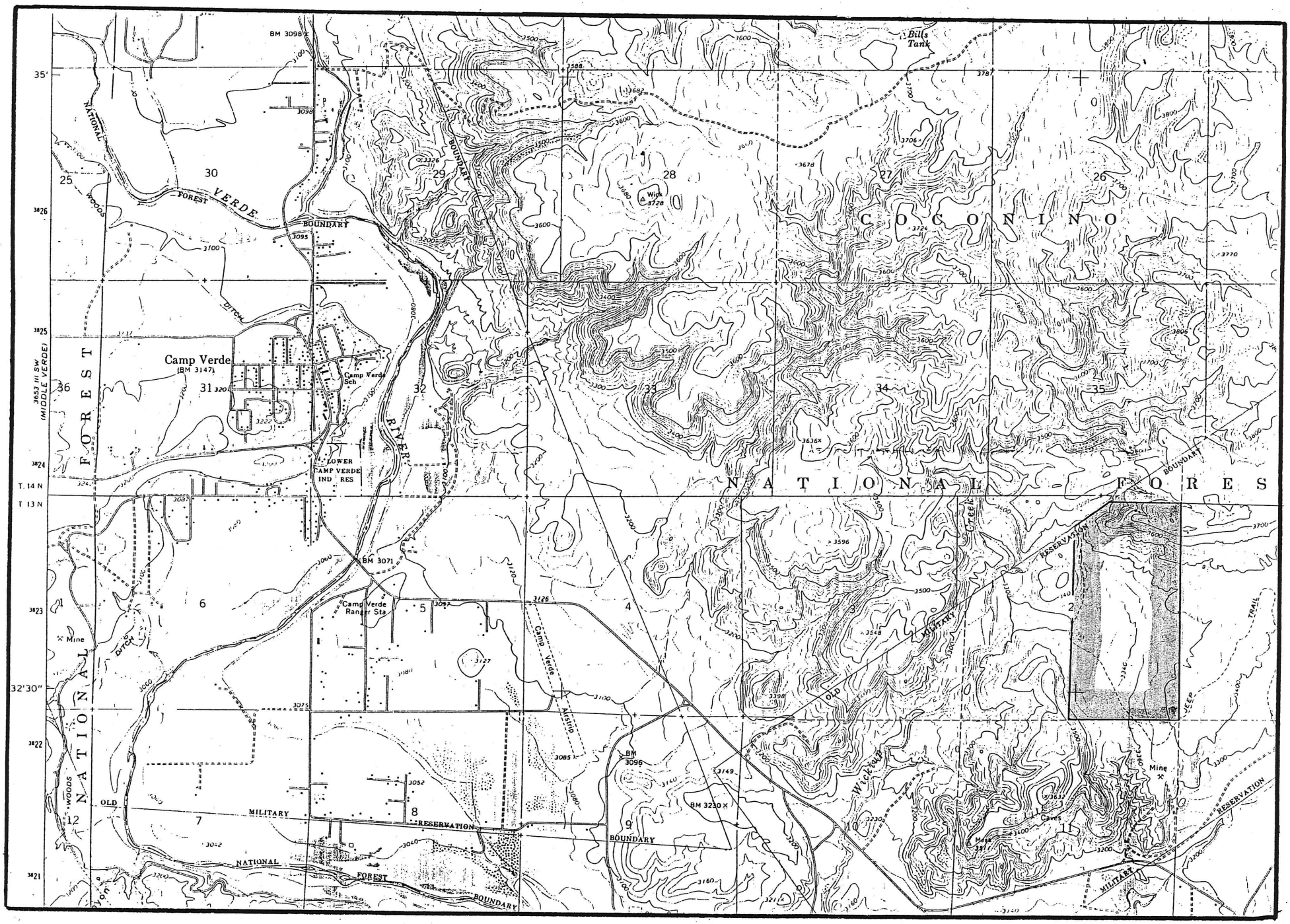

Arizona State Land Department

1616 W. Adams Street
Phoenix, AZ 85007

NATURAL RESOURCES DIVISION

FACSIMILE COVER PAGE

DATE: May 3, 2004

FAX TO: Trey Champie

FAX NO: (520) 792-2629

SUBJECT: Mineral Lease 11-1579

NUMBER OF PAGES INCLUDING COVER: 3

FROM: RICHARD AHERN

IF YOU HAVE ANY QUESTIONS, PLEASE CONTACT ME AT:

Phone: (602) 542-2642

Fax Number: (602) 542-3507

Comments: Attached for your information Re: estimate of deposit to be requested from applicant as we discussed last week.

Appraisal to be along lines of working draft sent to you for comment.

Memo

To: M. Rice
From: Richard Ahern
Date: April 1, 2004
Subject: Mineral Leases 11-001579 thru 11-1794; surface management

Phoenix Cement Company holds the subject leases covering a total of 315.13 acres including lots 1, 2, 5 & 6 and the southeast quarter of Section 2, T13 N, R5E in Yavapai County, Arizona. The original leases were granted by the Land Department effective on November 17, 1981 and expired on November 16, 2001. Phoenix Cement Co. has timely filed an application to renew the lease and the application is being processed according to it's merits.

The mineral leases are within a section of split-estate in which only the mineral or sub-surface estate belongs to the Trust. The land surface belongs to the U.S. government and is administered by the U.S. Forest service. The leases are within the boundaries of the Coconino National Forest as well as within the Camp Verde town limits.

On March 9, 2004 the surface management status of the lease area was discussed by telephone with Pete Mourtsen. Mr. Mourtsen is land manager for exchanges and sales with the Coconino National Forest with offices in Flagstaff, Arizona, phone (928) 527-3414. Mr. Mourtsen was aware of the gypsum mining activity in the Camp Verde area by Phoenix Cement. While we were on the phone, Mr. Mourtsen reviewed the history of land exchanges and offerings or requests for land exchanges within that area by searching records available to him. He seemed to be well aware of Forest lands in and adjacent to the Forest which had been either requested or proposed for exchange or transferred by land exchanges or sales. While there have been a number of land requests for sales and exchanges as well as completed land dispositions in the area, Mr. Mourtsen stated that no proposal could be identified for either a request or an offer to or from the Forest Service involving Section 2, T13N, R5E, the area of the subject leases. We did discuss the proposed disposition for commercial purposes of Forest Service land near the Verde River, a couple of miles to the east. He specifically was not aware of any basis for anyone asserting any administrative authority over the lands we were discussing except for the Forest Service or State and private mineral interest holders.

ARIZONA STATE LAND DEPAR[illegible]ENT — INTRAOFFICE MEMO

FROM: Mike Rice — DATE: March 22, 2004

SUBJECT: Gypsum Leases 11-1579 through 11-1594/Yavapai- Apache Nation

ROUTING ORDER		INITIALS	DATE ROUTED	ROUTING ORDER		INITIALS	DATE ROUTED
3	COMMISSIONER				REAL ESTATE		
2	DEPUTY COMMISSIONER				Commercial Leasing & Sales		
					Property Management		
					Rights-of-Way		
	ADMIN & RES ANALYSIS						
	Accounting				ASSET MANAGEMENT		
	Personnel				Appraisal		
	Forest Fire Fiscal				Planning:		
	Information Technology Sec.				Engineering		
	Geographic Information Sec.						
	Cartographer			1	NATURAL RESOURCES:		
					NRC Sec		
					Range		
	LAND INFO, TITLE & TRANSFER				Water Rights Mgt & Ag		
	Title & Contracts				Env / Trespass		
	Public Records				Minerals Section		
	Cadastral & Survey Review				Urban & Comm. Forestry		
	Admin Procedures						
	Comm & Public Affairs				FIRE MANAGEMENT		
	Land Conservation & Trsf				Phx Deer Valley Office		
	Legislative Liaison				Prescott Dist Office		
					Tucson Dist Office		
	BOARD OF APPEALS				Flagstaff Dist Office		
					Pinetop Dist Office		
	Attorney General's Office						

Initials above without comment shall indicate no facts available or no contribution within discipline of assignment to alter or negate action proposed

On March 4, 2004 I received the attached letter from Ms. Rene Toman. As administrator for the Nation's Economic Development Authority, the letter is intended to initiate a contested case regarding renewal of the captioned mining leases.

According to my phone conversation with Ms. Toman on March 11, 2004, the existing lessee is unwilling to sell gypsum to the Yavapai-Apache Nation. The existing lessee, Phoenix Cement Company is owned by the Pima-Maricopa Indian Community. As also discussed with Ms. Toman on March 11th, I informed her that I would review this matter and consult with legal counsel before responding. I informed her the earliest I could respond would be during the week of March 22nd.

The leases in question are located in the Verde Valley and have been pending renewal since November 2001. In response to our August 18, 2003 request for Completion of a Mineral Development Report, the Department received a draft report on March 16, 2004.

YAVAPAI-APACHE NATION
ECONOMIC DEVELOPMENT AUTHORITY

2400 WEST DATSI STREET
CAMP VERDE, AZ 86322
PHONE (928) 567-1019 FAX (928) 567-1051

Original

FACSIMILE TRANSMITTAL SHEET

TO: Michael Rice
FROM: Rene Toman, Administrator
COMPANY: AZ State land Dept.
DATE: March 4th, 04
FAX NUMBER: (602) 542-3507
TOTAL NO. OF PAGES INCLUDING COVER: (2)
PHONE NUMBER: (602) 542-4628
SENDER'S REFERENCE NUMBER:
RE: Mineral lease Nos 1579-1594
FAX NUMBER: (928) 567-1051

☐ URGENT ☒ FOR REVIEW ☐ PLEASE COMMENT ☒ PLEASE REPLY ☐ PLEASE RECYCLE

NOTES/COMMENTS:

Mr. Rice,

The signature of the Chairman on the following letter represents the approval of the Nation to proceed with this issue.

However, the Economic Development Authority Department will administer all aspects. Please direct all correspondence through my attention. Address and phone numbers are listed above.

Thanking you in advance,

Rene Toman
EDA Administrator

Yavapai-Apache Nation

Phone: (928) 567-3649 Fax: (928) 567- 3994

STATE LAND DEPARTMENT
2004 MAR -5 AM 9:25

Michael Rice, Minerals Section Manager
Arizona State Land Department
Natural Resources Division
1616 West Adams
Phoenix, AZ 85007

March 4, 2004

Via Fax and U.S. Mail

Re: Contesting Application for Renewal of Mineral Rights & Requesting Hearing

Dear Mr. Rice:

I am writing to you concerning mineral rights owned by the State of Arizona in Township 13 North Range 5 East Section 2 and Mineral Lease Nos. 1579-1594, which falls within the boundaries of Yavapai-Apache Nations indigenous tribal lands. The Yavapai-Apache Nation is aware that the State of Arizona is currently considering applications for renewal of Mineral Lease Nos. 1579-1594 and that these applications have been made by Phoenix Cement Company (PCC) or possibly two of its officers or employees, James D. Wells and/or Roger R. Smith, Jr.

The Yavapai-Apache Nation, in its pursuit of economic diversification, has recently invested in a new cement company, Drake Cement, LLC. The facility will be situated in Drake, Arizona approximately 40 miles north of Prescott off of Highway 89. This new cement plant will initially produce approximately 650 thousand tons of II / V cement annually requiring approximately 40 thousand tons of gypsum. Inquiries were made of PCC regarding the potential of purchasing gypsum to be used at our cement manufacturing facility and was denied. There is no other nearby comparable source of gypsum for Drake Cement to be able to compete with PCC.

The Yavapai-Apache Nation is also aware that PCC owns or controls 2294 acres in various areas within or near Township 13 North Range 5 East. These 2294 acres consists of 1820 acres under Federal Mining Claims with an additional 275 acres under a patent application and approximately 320 acres are State's Mineral Lease Nos. 1579-1594. In addition to previous patent applications, PCC owns patented land in excess of 300 acres in Sections 1, 11, 12 and others. The patented land, the federal mining claims and the mineral leases are allegedly for the mining of gypsum of which the Company uses in its cement production facility in Clarkdale, AZ.

PCC has actively mined gypsum on only a very small portion of the 2294 acres of property under their control. In fact, it is the Nation's belief this is an attempt to monopolize the gypsum mineral deposits in this region. And, further more, we believe that PCC has no intent to conduct mining from the property referenced in Mineral Lease Nos. 1579 – 1594. Even with the publicly announced increase in production of PCC's Clarkdale facility, its consumption of gypsum will merely increase from about 35,000 tons to 60,000 tons annually.

Please be so kind as to advise us what may be done so that these gypsum resources may actually be mined and the mineral rights on our indigenous tribal lands may be leased to the Yavapai-Apache Nation. Please consider this letter as initiating a contested case and as such, requesting a hearing concerning any action by your department in granting the application for renewal of Mineral Lease Nos. 1579-1594.

Thank you for your time and attention in this matter,

Sincerely,

Jamie Fullmer
Chairman

2400 W Datsi Street, Camp Verde, AZ 86322

Salt River
PIMA-MARICOPA INDIAN COMMUNITY
10005 E. OSBORN RD. / SCOTTSDALE, ARIZONA 85256-9722 / PHONE (480) 850-8000

March 03, 2003

Dear Clients and Business Associates:

On January 14, 2003, the Council of the Salt River Pima-Maricopa Indian Community (SRPMIC) approved the consolidation of Phoenix Cement Company and Salt River Sand & Rock. Subsequently, a transition steering committee was assembled with representatives from both companies, the Council, and the Community. Currently, committee members are engaged in the process of merging the two organizations into one entity.

The Community ownership interest in Phoenix Cement Company and Salt River Sand & Rock dates back to 1987 and 1980, respectively. Phoenix Cement Company was established in 1959 and has grown to become one of the Southwest's leading manufacturers and distributors of cement, mortar, fly ash, bottom ash, and cenospheres. A recently completed modernization and expansion of the Clarkdale cement plant has increased annual cement production capabilities from 700,000 tons to approximately 1,200,000 tons. Salt River Sand & Rock, a wholly owned entity of the SRPMIC since 1993 has been the #1 sand and gravel producer in Arizona for over a decade. Additionally, the company's construction division has become one of the largest builders on Native American communities in the greater metropolitan Phoenix area.

As we embark on the merger of these two businesses, both organizations assure you that we are committed to continuing to serve and interact with you in the timely and professional manner to which you have become accustomed. All parties involved in this merger feel the end result will benefit all of our business partners and enhance the Community's construction materials business for many years to come. New markets, additional products, greater technical support, increased efficiencies, and a stronger presence in the marketplace will be beneficial to our valued customers as well as to our suppliers and associates.

Should you have any questions, concerns, or comments regarding your relationship with the Salt River Pima-Maricopa Indian Community, Phoenix Cement Company, or Salt River Sand & Rock, please let us know by contacting Dale Diulus, our Transition Manager for this process, who was appointed by the Council. Mr. Diulus is Phoenix Cement's Vice President of Fly Ash Products, and can be reached at his office number, (480) 850-5755, or his cell phone, (602) 321-6055. Our commitment to you will be paramount throughout this transition process. In the coming months, we will keep you apprised of any significant organizational changes that may take place.

Respectfully,

Joni Ramos, President
SRPMIC

Roger Smith, Jr. President
Phoenix Cement Company

Wayne Hills, Gen. Mgr
Salt River Sand & Rock

MINERAL DEVELOPMENT REPORT

Mineral Lease 11-1579

Section 2, T13N, R5E
Yavapai County, Arizona

Phoenix Cement Company
P.O. Box 428
Clarkdale, Arizona 86324
(928) 634-2261

DRAFT

Prepared By:

Mining & Environmental Consultants, Inc.
9314 W. Willowbrook Drive
Sun City, Arizona 85373
(623) 376-6435

For:

Minerals Section
Natural Resources Division

Arizona State Land Department

March, 2004

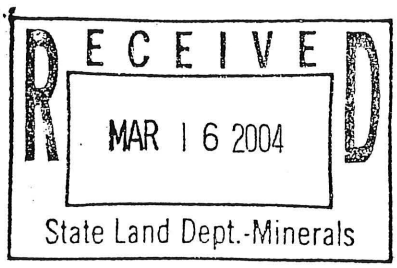

TABLE OF CONTENTS

Introduction	1
1.0 Geological Evaluation	1
1.1 Geological Summary	1
1.2 Regional Geology	2
1.3 Exploration and Mining History	3
1.4 Current Project Exploration and Testing	3
1.5 Detailed Property Geology	4
1.6 Deposit Model Description	5
1.7 Resource Estimate	5
2.0 Economic Feasibility	7
2.1 Economic Summary	7
2.2 Commodity/Products	7
2.3 Market Analysis Discussion	7
2.4 Costs	9
2.5 Operational/Economic Parameters	10
3.0 Environmental Assessment	10
3.1 Environmental Statement of Findings	10
3.2 Purpose and Scope of Assessment	12
3.3 Land Ownership	12
3.4 Current/Planned Land Uses	12
3.5 Geography/Physical Setting	13
3.6 Soils	14
3.7 Drainage and Erosion	14
3.8 Surface/Groundwater	14
3.9 Biology	15
3.10 Cultural Resources	16
3.11 Hazardous Materials	17
3.12 Solid Wastes	17
3.13 Septic System	17
3.14 Air Quality	17
3.15 Noise	17
3.16 Visual Impact	18
3.17 Open Space, Parks, Recreation Areas, Wildlife Refuges	18
3.18 Environmental Liens	18
3.19 Regulations and Permits	18
3.20 Utilities	19
3.21 Improvements	19
3.22 Transportation	19
3.23 Planning and Zoning	20
3.24 Socioeconomic Impacts	20
3.25 Reclamation Alternatives	21
4.0 Mining Operations Plan	21
4.1 Operations Summary	21
4.2 Development/Production Schedules	22

4.3 Site Development 22
4.4 Access and Haul Roads 22
4.5 Construction 23
4.6 Mining 23
4.7 Process/Recovery 24
4.8 Production Monitoring and Verification 26
4.9 Product Handling, Stockpiling, Bagging and Storage 26
4.10 Product Transportation/Hauling 26
4.11 Labor Force 26
4.12 Contractors/Subcontractors 26
4.13 Control of Dust and other Particulates 27
4.14 Noise Abatement 27
4.15 Blasting, Explosives Storage and Handling 27
4.16 Power Generation and Distribution 27
4.17 Water Supply, Storage and Use 27
4.18 Fuel Storage 27
4.19 Sanitary and Solid Waste Handling and Disposal 27
4.20 Hazardous Waste Handling/Water Pollutants/Spills 27
4.21 Site Security 28
4.22 Fire Protection 28
4.23 Cultural Resources 28
4.24 Protected Species Handling 28
4.25 Wildlife/Endangered Species Protection 28
4.26 Visual Impact 28
4.27 Emergency Response 28

5.0 Reclamation and Closure Plan 29
5.1 Reclamation Summary 29
5.2 Reclamation Approach 29
5.3 Reclamation Scheduling and Timing 30
5.4 Personnel 30
5.5 Post-reclamation Care 30
5.6 Approach to Developing the Reclamation and Closure Report 31

References 31

Figures

1. Location Map
2. Vicinity Map
3. Lease Area Map
4. Drill Hole Locations
5. Geological Map
6. Cross Section Locations
7-10. Cross Sections
11. Overburden Isopach
12. Land Ownership Overview
13-16. Land Ownership
17. Soils
18. FEMA FIRM map

19. Conceptual Post-Reclamation Surface
20. Open Space, Parks, Recreation Areas, Wildlife Refuges
21. Proposed Mining Panels
22. Process Diagram

Table

Photos

1. Panoramic View of Mining Area
2. Central and Northern Portion of Lease
3. Central Basin
4. Mining Panels on the Lease Area
5. Typical Vegetation
6. Non-Mineralized Beds Above Gypsum Beds
7. Gypsum Beds
8. Close Up of Gypsum Bed
9. View of Plant and Mining Area
10. Scraper Mining Overburden
11. Crushing/Screening Plant
12. Wet Plant
13. Product Stockpiles, Office and Shop

Appendices

A. Reclamation Cost
B. Climate Summaries
C. Biological Evaluation
D. Archaeological Evaluation
E. Proposed Seed Mix
F. Permits

CHEMICAL ANALYSIS DATA

1/8" Minus	$Si0_2$(%)	Al_20_3(%)	Fe_20_3(%)	MnO(%)	MgO(%)	CaO(%)	Na_2O(%)	K_2O(%)	TiO_2(%)	P_2O_5(%)	LOI(%)	TOTAL
	4.97	1.10	0.49	0.01	2.40	29.35	0.10	0.16	0.06	<0.01	20.98	59.50

Ba (ppm)	Sr (ppm)	Y (ppm)	Sc (ppm)	Zr (ppm)	Be (ppm)	V (ppm)
73	2688	1	<1	9	<1	6

SO_3(%)	Gypsum*(%)	Insol(%)
41.4	89.0	4.8

*NOTE: Total SO3 calculated as Gypsum.

3/16" Pellets	$Si0_2$(%)	Al_20_3(%)	Fe_20_3(%)	MnO(%)	MgO(%)	CaO(%)	Na_2O(%)	K_2O(%)	TiO_2(%)	P_2O_5(%)	LOI(%)	TOTAL
	5.04	1.13	0.65	0.01	2.34	29.57	0.10	0.21	0.07	<0.01	20.98	60.12

Ba (ppm)	Sr (ppm)	Y (ppm)	Sc (ppm)	Zr (ppm)	Be (ppm)	V (ppm)
74	2481	1	1	12	<1	15

SO_3(%)	Gypsum*(%)	Insol(%)
41.9	90.1	4.3

*NOTE: Total SO3 calculated as Gypsum.

Larson (Gypsum) (T)

LARSON GYPSUM DEPOSIT YAVAPAI COUNTY
CAMP VERDE DIST.

Mine is idle. The warehouse and scales at the Larson property are being used by a Mr. Back who is making occasional shipments of flagstone from the Tigar and neighboring claims in an area northeast of Camp Verde.

T. P. LANE
3-30-59 WR

Date Printed: 12/03/97

ARIZONA DEPARTMENT OF MINES AND MINERAL RESOURCES

INFORMATION SUMMARY

Information from: **Russ Mosier**

Company: Rotomil

Address:
City, State ZIP:
Phone:

MINE: **Camp Verde Gypsum**

ADMMR Mine File: Larson Quarry File
County: **Yavapai**
AzMILS Number: 626

SUMMARY

The three page report that follows describes a test application of a rotory excavator at three mines in Arizona.

The mines are the Winkleman Gypsum Mine in Pinal County, the St. Johns Limestone Mine in Apache County, and the Camp Verde Gypsum Mine in Yavapai County. All were owned and operated by Superior Companies at the time of the tests.

Copies of the report are included in the appropriate mine files because it includes some operating and deposit information regarding each operation.

Ken A. Phillips, Chief Engineer Date: December 1, 1996

Mosier on Camp Verde Gy
Page 1 of 4

TEST & EVALUATION OF CAT MODEL PR450 PROFILER (ROTOMILL) IN LIMESTONE AND GYPSUM QUARRIES

On Tuesday, February 10, 1987, we began testing and evaluation of a CAT model PR450 Rotomill for harvesting gypsum and limestone in quarries operated by Superior Companies. This report will summarize our observations.

Our objective is to determine if a rotomill is capable of singlehandedly excavating, crushing and loading gypsum and limestone.

Winkleman – At this operation, gypsum is drilled and shot, loaded into a 35 ton off-highway truck, hauled to a stockpile for crushing and screening, and then stockpiled off of conveyors.

We established that the PR450 could get adequate production in this material without overloading the machine. Travel speeds ranged from 25 to 75 feet per minute, the depth of cut from 2 to 6 inches. We timed and weighed two loads and established the 450 was producing 203 tons per hour working on the level, and 237 tons per hour working down a 7% grade.

The material here is not very abrasive; wear life of the teeth will be measured in weeks and months, not hours or days.

The water spray system on the 450 does wonders for dust control and has no significant adverse affect on loading and handling material.

Amount of Fines – Right from the start, our main concern at this site was to harvest material with minimum fines; they prefer two inches and larger particle size. In order to increase particle size, we ran the PR450 with one half of the teeth removed, and with two thirds of the teeth removed. We found that a four inch depth of cut, 40 feet per minute travel speed, going up a 7% grade, with one-half of the teeth removed produces the least amount of fines with mostly two inch and larger particle size.

The concern about fines is specifically a concern about clay material which may be predominant in the fines; this diminishes the purity of the gypsum product. Gypsum fines are no problem, but clay fines are. Perhaps the best way to deal with this is to avoid mixing the two materials. At this operation, there are relatively thin layers of clay inbetween the thicker layers of gypsum. When you drill and shoot this formation, you can't help but mix the two. The Rotomill gives you the ability to be very selective about what you harvest. You can work a gypsum seam right down to where the clay layer starts, then either stop milling and remove the clay with a loader or a broom, or continue milling but divert the clay as it comes off of the belt to a separate windrow as waste. One thing for certain regarding sizing of material: the PR450 won't leave material that must be dealt with with an air hammer and chisel.

Stockpiles The finished product coming off of the PR450 belt can be loaded directly into trucks, or stockpiled in windrows two or three passes high on 25 foot centers. This type of stockpiling may present less segregation problems and may dry out quicker and more completely following rainfall than a tall stockpile.

Mosier on Camp Verd

St. Johns, Arizona - Limestone Quarry

Here, Superior Companies is harvesting porous limestone which is used primarily at the St. John's power plant as a precipitate in their polution control system. Material is normally ripped and dozed to the crusher. The typical production rate is about 135 tons an hour.

We ran the PR450 here on February 16 and 17; we started with one half of the teeth removed, but found that this material is so tough that you need all of the teeth working at it. Surprisingly, going to the full set of teeth didn't seem to affect material size much; we consistently saw a fairly large percentage (say 10%) of slabs about six inches across and maybe one inch thick - that's just the way it broke out. We should be able to reduce the amount of this slabbing by running the machine down a seven to ten percent grade and thereby retaining the material in the cutter housing longer.

The PR450 was able to excavate and load 150 - 155 tons per hour in the red and white limestone formation picked for this test - thought to be the toughest material in this pit. Travel speed was typically about 20'/minute. On the 2nd day, average production increased to 195 tons per hour.

We expect to see more tooth wear here, but nothing excessive. We did break six teeth. The machine is shipped with asphalt teeth, and as they break, we're replacing them with a concrete tooth which is more resistant to impact like we have in this limestone. We've replaced another six or so that wore unevenly due to nonrotation. Some of those teeth showed signs of rust on retainers, and that may have been caused by weathering before the machine was shipped from the factory.

This material is tough enough that it caused some chunks of rubber to be torn loose from the track shoes.

CAMP VERDE

Here, gypsum is ripped, either with a dozer tractor, or with rippers installed on the rear of a Euclid TS-14 scraper, then loaded by the scraper and hauled to their screening and crushing plant. Typical production rates are approximately 115 tons per hour. The PR450 was able to excavate and load 211 tons per hour going up a 6% grade, and 301.5 tons per hour going down that same grade. Some 90-95% of the material produced was 2" minus. The depth of cut varied from 6" to 12". Since fines are desirable here, we ran with all teeth installed.

Here, the distance from the material face to the screening/crushing plant will require more than a pair of trucks to keep up with the PR450. One solution to this may be to run an adequate number of 'pups' (4 wheel trailers) that can be towed behind the PR450, loaded, and then towed by the truck/tractor to the dump location.

Job Layout and Machine Utilization

Perhaps the best way to get maximum utilization of the PR450 in Superior's operations would be as follows:

1. Work the PR450 on as long of a pass as possible, thus reducing turnaround and maneuver time. You can control slopes and grades for run off and drainage purposes, and you'll soon have a very smooth pit surface.

2. Load trucks off of the belt during cutting operation; loading the material while you've got it 'on the move' eliminates one more time that it must be handled, and gets it away from the cut area and out of the way immediately.

3. Dump the truck loads into a separation device, and let the material that is sized suitably as the finished product go directly to a stockpile, with over-sized material diverted to a separate stockpile which will require crushing.

Based on annual production requirements of approximately 40,000 tons at both Winkleman and St. John's, and approximately 30,000 tons at Camp Verde, one PR450 could harvest these annual production requirements as follows:

1. Winkleman - 2.0 months of operating time.

2. St. John's - 3.0 months operating time.

3. Camp Verde - 1.4 months operating time.

(Based on single shift, 176 hours per month, 50% machine efficiency.)

This would leave some 47% reserve time for moving the machine, for maintenance and repair, or for expansion of production.

Russ Mosier

dt

cc: Grant Baecker
Frank Vukov

Mosier on Camp Verde Gyps
Page 404

Larson Quarry

CRUSHING PLANT DUST CONTROL SYSTEM.

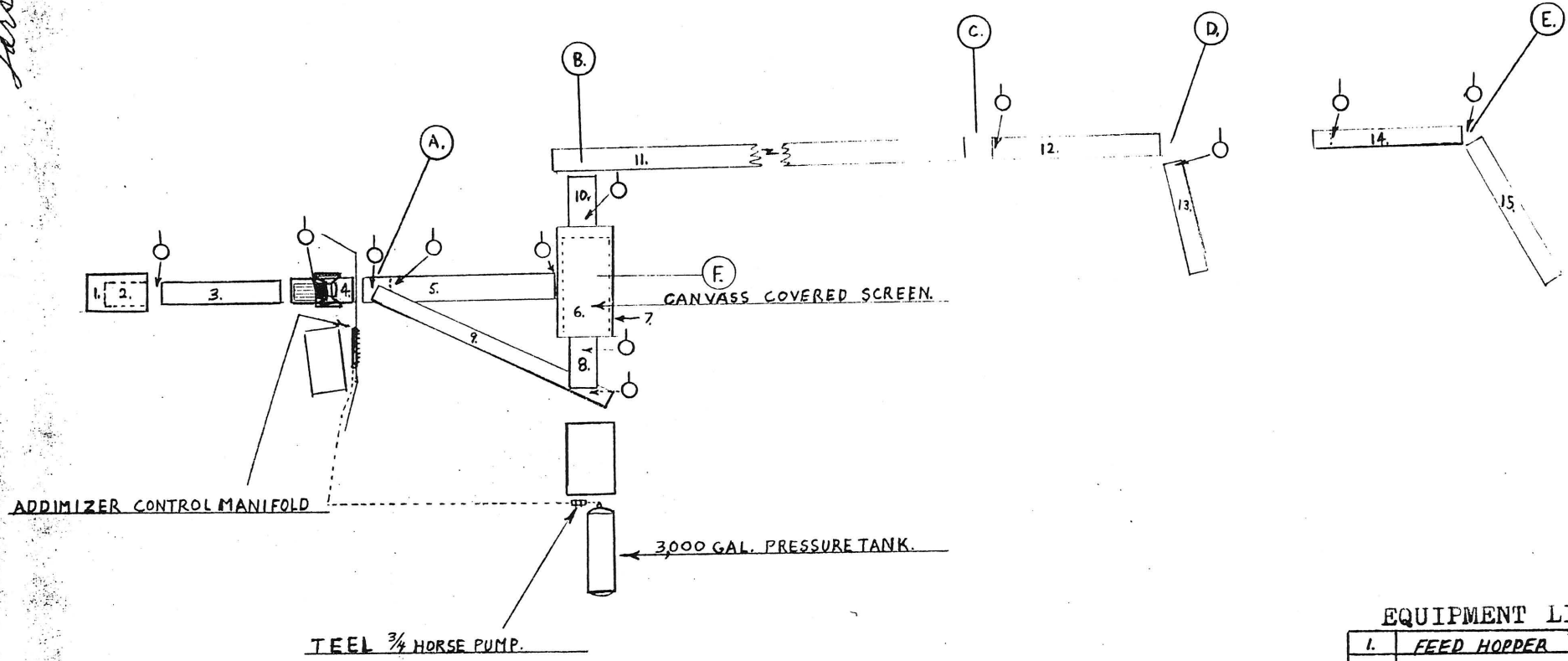

EQUIPMENT LIST.

1.	FEED HOPPER	25 TON.
2.	APRON FEEDER	30"X 5'
3.	FEED BELT	26"X30'
4.	JAW CRUSHER	24"X 36
5.	FEED BELT	30"X 50'
7.	ROLL CRUSHER	40"X30" TWIN
6.	SCREEN	4'X10' 2 DK
8.	REROCK #1.	24"X 16'
9.	REROCK #2.	24"X 28'
10.	OUT FEED BELT	36"X 16'
11.	LONG BELT	24"X 200'
12.	MARCO BELT.	24"X 70'
13.	HELMICK STACKER 1.	24"X 62'
14.	BARBRA GRN. BELT.	24"X 60'
15.	HELMICK STACKER 2.	24"X 82'

Scale NONE. Date-2/03/96.

o - INDICATES 1/4" ADDMIZERS LOCATIONS

(A-F) INDICATES FULLEY ENCLOSED DROP POINTS.

Prepared by- Glenn R. Boyce.

Farron Quarry

PRII / CRUSHING + SCREENING.

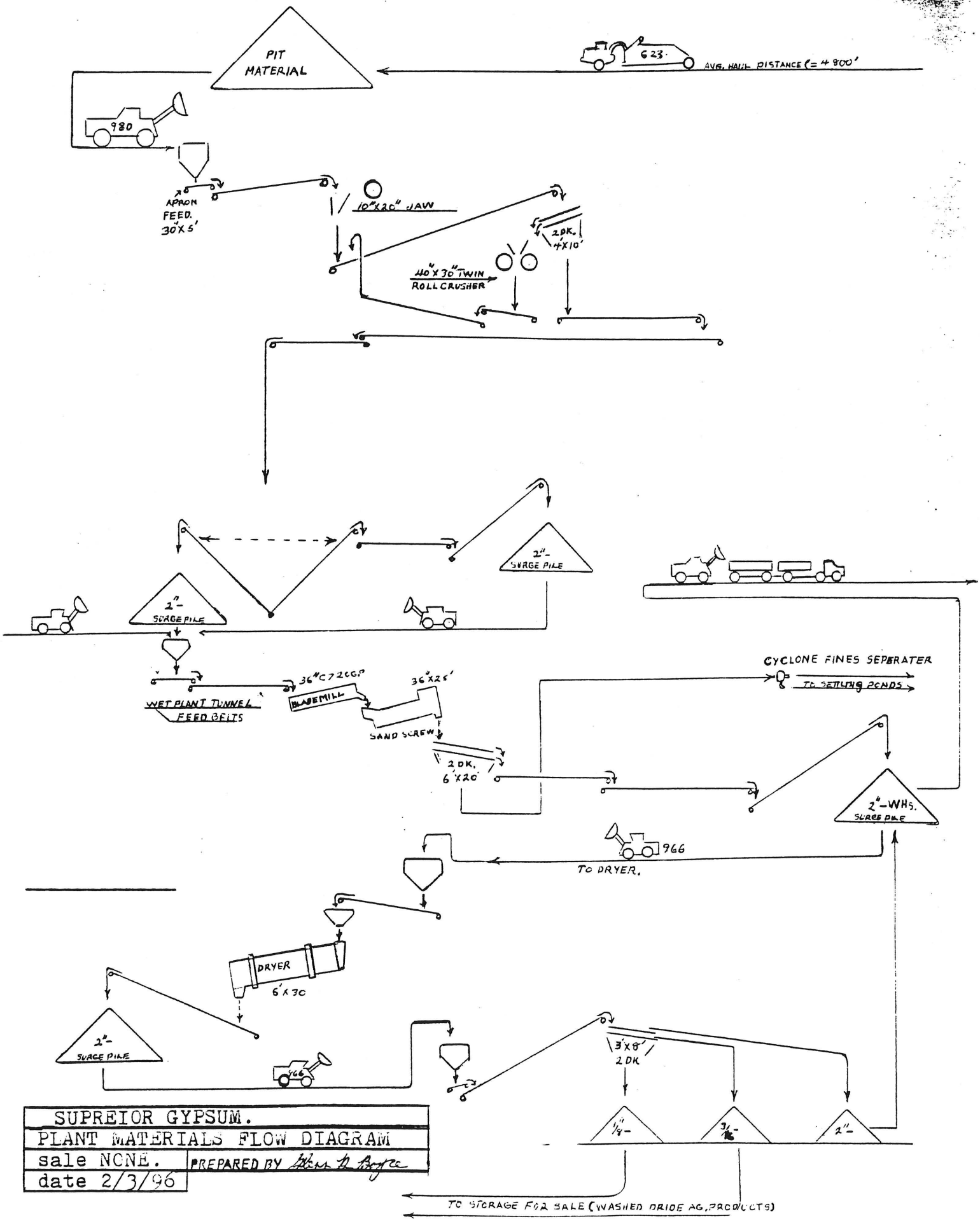

SUPREIOR GYPSUM.	
PLANT MATERIALS FLOW DIAGRAM	
sale NONE.	PREPARED BY Steven L. Boyce
date 2/3/96	

Larson Quarry

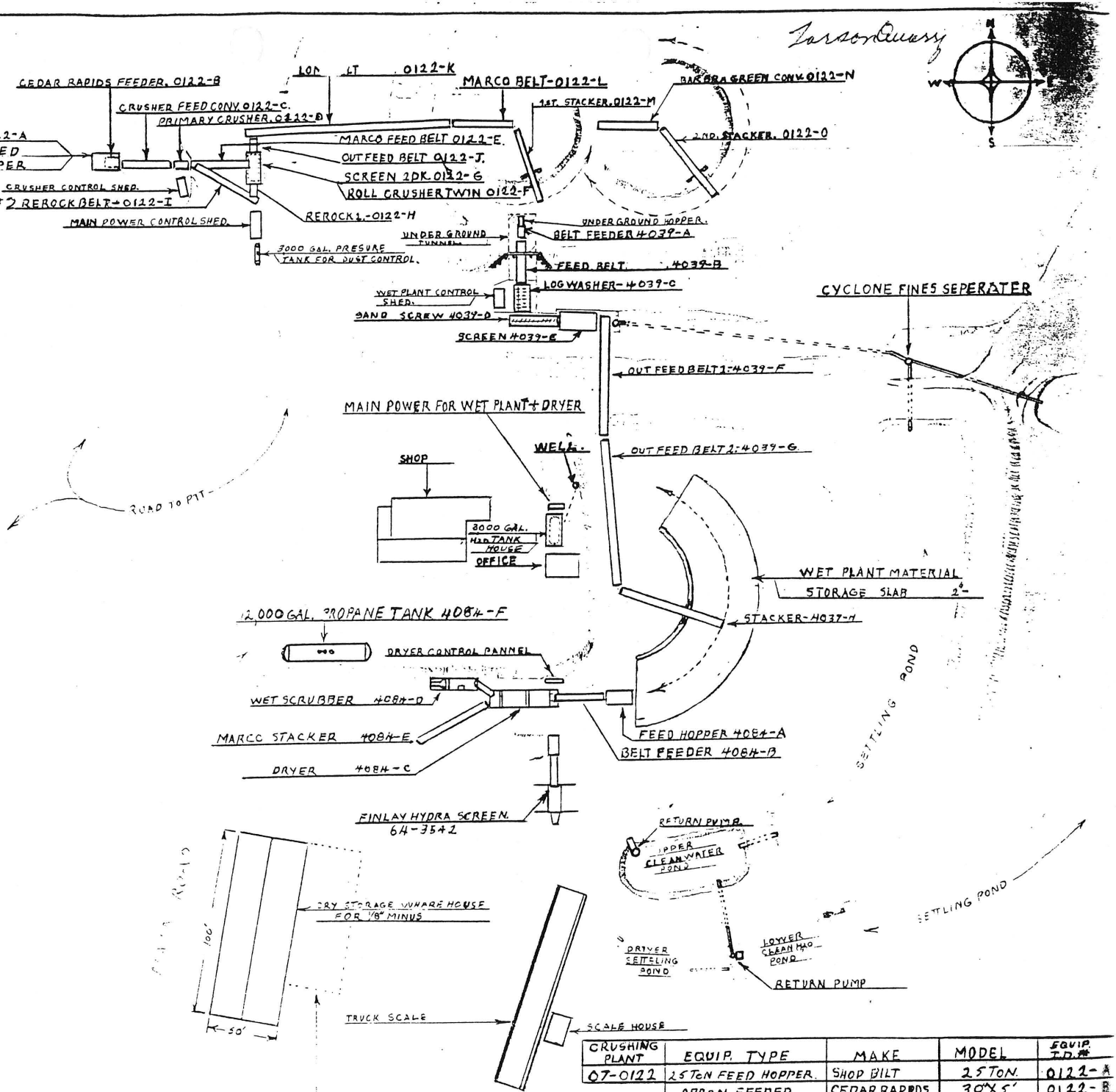

CRUSHING PLANT	EQUIP. TYPE	MAKE	MODEL	EQUIP. I.D.#
07-0122	25 TON FEED HOPPER.	SHOP BILT	25 TON.	0122-A
	APRON FEEDER.	CEDAR RAPIDS	30"X5'	0122-B
	FEED BELT.	SHOP BILT	26" X 30'	0122-C
	JAW CRUSHER.	KUE KEN	24" X 36"	0122-D
	FEED BELT.	MARCO	161, 30" X 50'	0122-
	ROLL CRUSHER.	PIONEER	40"X30"TWN	0122-
	SCREEN.	TELESMITH	4'X10' 2DK.	0122-
	REROCK BELT #1.	SHOP BILT	24" X 16'	0122-
	REROCK BELT #2.	" "	24" X 28'	0122-
	OUT FEED BELT.	" "	36" X 16'	0122-
	LONG BELT.	" "	24" X 200'	0122-
	BELT	MARCO	361, 24" X 70'	0122-
	STACKER #1.	HELMICK	24" X 62'	0122-
	BELT	BARBRA GRN.	24" X 60'	0122-
	STACKER #2.	HELMICK	24" X 82'	0122-
WET PLANT 61-4039	BELT FEEDER	SHOP BILT	30" X 74"	4039- A
	FEED BELT.	SHOP BILT	30" X 62'	4039- B
	LOG WASHER.	EAGLE	36" X 20' X 7'	4039- C
	SAND SCREW.	TORGERSON	36" X 25'	4039- D
	SCREEN	SIMPLICITY	6' X 20' 2DK	4039- E
	BELT	SHOP BILT	20" X 90'	4039- F
	BELT	SHOP BILT	24" X 120'	4039- G
	STACKER	KOLBERG	24" X 50'	4039- H
DRYING & SCREENING PLANT. 69-4084	FEED HOPPER	SHOP BILT	25 TON	4084-A
	BELT FEEDER	MARCO	361, 24" X 70	4084-B
	DRYER	ETNYRE	6' X 30' (72 30)	4084-C
	WET SCRUBBER	TODD	dm-620	4084-D
	STACKER	MARCO	361, 24" X 70	4084-E

SUPERIOR GYPSUM.
PLOT PLAN.
scale-NONE-.
— date 2/3/96
PREPARED BY Glenn R Boyce

Tarson Quarry

SUPERIOR COMPANIES

100 West Coolidge • Phoenix, Arizona 85013 • (602) 230-9300 • FAX (602) 230-0189

January 7, 1995

Mr. Ken Phillips
Department of Mines and Mineral Resources
1052 W. Washington
Phoenix, Arizona 85007

Dear Ken:

Happy New Year! Hope everything is going well with you.

I just wanted to drop you a quick line about the clay we are finding in our new sand and gravel location in Camp Verde. We are encountering both a blueiish and greenish colored clay and have sent both in for lab tests. I am attaching the results for your review. We are not currently in a position to actively market the clay but we want to keep you informed of what products Superior does have access to.

I would like to get together for lunch later this month. How about the 25th or 26th? Please let me know if one of these or another date would work.

I look forward to talking to you soon.

Sincerely,
Superior Companies

Don

Donald E. Fischer
Vice President

Superior Companies letter of 1-7-1995
Page 1 of 2

CLAY ANALYSIS

Both the green and the blue clays are virtually impervious when compacted to 95% of maximum dry density. The are high in both clay and silt content, with high plasticity index.

	BLUE	GREEN
Max. dry density	94.3 (26.5%)	91.3 (25.7%)
Plasticity Index (PI)	41	37
Permeability	2.2x10 -8 cm/sec	1.0x10 -7 cm/sec
Gravel %	0	0
Sand %	19.8	9.6
Silt %	40.0	43.1
Clay %	40.2	47.3
Swell %	4.9	5.1
Oxides		
Silicon	51.8	56.9
Aluminum	19.4	14.0
Iron	8.4	5.4
Carbon	4.5	2.5
Calcium	6.0	4.3
Potassium	3.0	0.9
Quartz	24.8	24.3
Calcite	10.2	5.7

Superior Companies letter of 1-7-1995
Page 2 of 2

Date Printed: 12/09/93

ARIZONA DEPARTMENT OF MINES AND MINERAL RESOURCES

VERBAL INFORMATION SUMMARY

Information from: **Donald E. Fischer, Vice President**

Company: Superior Companies

Address: 100 West Coolidge
City, State ZIP: Phoenix, Arizona 85013
Phone: 602-230-9300

MINE: **Camp Verde Gypsum**

ADMMR Mine File: Larson Gypsum Quarry file
County: **Yavapai**
AzMILS Number: **626**

SUMMARY

Specification data on a number of Arizona mined products was obtained for Gerd A. Zimmermann of Scottsdale, the U.S. contact for Hebel GmbH of Germany. They (Hebel GmbH) are interested in building a wall panel plant in the southwestern United States.
Don Fischer, Vice President, Superior Companies provided typical analysis on their gypsum from their Larson Quarry at Camp Verde Gypsum Mine. Copies of the data provided by Mr. Fischer has been made for the Larson Quarry mine file.

Ken A. Phillips, Chief Engineer Date: December 6, 1993

SUPERIOR COMPANIES

100 West Coolidge • Phoenix, Arizona 85013 • (602) 230-9300 • FAX (602) 230-0189

December 6, 1993

Ken Phillips
Department of Mines and Mineral Resources

Re: Gypsum Specifications

Dear Ken:

Here is the information I had at my finger tips regarding the quality of Superior's Gypsum deposits:

Winkelman- I have attached a copy of a "Summary of Chemical Analysis" which was performed on property adjacent to Superior's. I believe the information is pertinent since it is all part of the same mineralization.

Camp Verde- I have attached results from two different labs for the washed and pit run material. We currently have some pit run samples in for testing, but have not received the results. I will get them to you when they are available. The gypsum quality for the washed material has been running 90-93% with 6-10% insols.

Superior has extensive reserves at both locations and could accommodate a plant site at either location. The natural gas line at Winkelman is a feeder line for the copper mines and could be used for a plant.

I hope this provides some of the information you need. Let me know if I can provide and more details.

Sincerely,
Superior Companies

Donald E. Fischer
Vice President

Camp Verde

American Analytical Laboratories

Tucson — Phoenix — Mexico

LABORATORY ANALYSIS REPORT

Code: SUPCOM
SUPERIOR COMPANIES
ATTN: KENNETH GAINES
P.O. BOX 786
CAMPE VERDE, AZ 86322-
PO #: 24692 FOR JULY

SAMPLE INFORMATION
Sample..: 016342-01
Clnt Smp: .
Descript: GYPSUM SAMPLE
Location:
Samp D/T: 09/17/93
Sampler.: CLIENT
Trans By: MAIL
Recvd By: GEOFF SANNING
Date Rcv: 09/20/93
Date Rpt: 09/23/93

Analysis		MCL	Results	Date
ACID/INSOL	ACID INSOLUBLE (%)		5.9	09/23/93
GYPSUM	GYPSUM ANALYSIS (%)			09/23/93
	1. CALCIUM OXIDE CAO		32.0	
	2. SULFUR TRIOXIDE SO3		41.9	
	3. GYPSUM CALCULATED		90.	

Washed

Comments:
All units are MG/L unless otherwise specified.
ND means analyte not detected.
MDL is the Method Detection Limit.

Analyst(s)

810 E. Hammond Lane Phoenix, Arizona 85034 FAX 602-340-0473 602-254-6181 800-279-6181

RECEIVED JAN 2 4 1989

Camp Verde

Arizona Testing Laboratories

817 West Madison Street ☐ Phoenix, Arizona 85007 ☐ 602/254-6181

For: Superior Mining Companies
Post Office Box 308
Cottonwood, Arizona 86326

Date: January 19, 1989

Lab No.: 3594

Received: 1-13-89

Marked: Purchase Order 16365
Sample of Gypsum

Submitted by: Mr. Jack Ballam

Pit Material

REPORT OF QUALITATIVE SPECTROGRAPHIC EXAMINATION

ELEMENT	APPROXIMATE PERCENT
Silicon	2.0
Boron	0.001
Aluminum	0.8
Magnesium	0.8
Manganese	0.006
Copper	0.004
Iron	0.6
Calcium	Major Constituent
Sodium	0.1
Titanium	0.02
Strontium	0.08

Chemical Analysis

Calcium Oxide, CaO	29.1 %
Sulfur Trioxide, SO_3	40.5
Gypsum, calculated from above	87.
Loss on Ignition	20.3

Respectfully submitted,

ARIZONA TESTING LABORATORIES

Claude E. McLean, Jr.

DEPARTMENT OF MINERAL RESOURCES

STATE OF ARIZONA

FIELD ENGINEERS REPORT

Mine Larson (Gypsum) Date January 10, 1961

District Camp Verde, Yavapai Co. Engineer Travis P. Lane

Subject: Visit of Dec. 28, 1960

Refer to Department of Mineral Resources report dated July 23, 1958 and subsequent memos.

The Arizona Gypsum Co. is now the operating company - since the merger of Fisher interest and Verde Gypsum Co. in Sept. 1960. Gordon E. French is superintendent. Bob Manifee is foreman. Address of the company is Camp Verde, Arizona.

The old crude crushing and screening plant has recently been replaced by a Cedar Rapids "Commander" portable plant located about 1/4 mile northeast from the site of the old plant, and is currently processing gypsum beds which are extensions of those formerly mined and processed. The plant consists essentially of an 18" x 36" crusher, a set of rolls and 2 multideck screens together with bins, conveyors, etc. Mining is done with a tractor-drawn ripper and a dozer.

The plant is supplying gypsum to the Clarkdale plant of Phoenix Cement Co. on a contract calling for delivery of 2500 tons per month with size specification -2" plus 1/4", and minimum grade 84% $CaSO_4$ (no anhydrite).

7 men were working at the time of visit. This included construction of an elevated 200' conveyor for removal and stacking of discarded fine material.

LARSON GYPSUM DEPOSIT

YAVAPAI COUNTY
CAMP VERDE DIST.

Visited the Verde Gypsum Co, operation on the Larsen deposit near Camp Verde. These people are supplying the Clarkdale cement plant with their gypsum requirements. Mr. French Sr. and Jr. were present at the property at the time of visit also an employee, Bob Manifee. The cement plant is currently accepting deliveries at the rate of 1200 tons per month and is expected to need double or triple this amount before the end of the year. Some changes are being made (mainly screen size) to reduce an objectionable amount of fines in the product.
TRAVIS P. LANE - 3-26-60 - W.R

Wm. Kessler, Mgr., Arizona Gypsum Corp., 2255 S. 19th Ave., Phoenix, Arizona. This property active Sept. 1960.

DEPARTMENT OF MINERAL RESOURCES

STATE OF ARIZONA

FIELD ENGINEERS REPORT

Mine: Larson (Verde Gypsum Co.) Date: Sept. 3, 1959

District: Camp Verde Engineer: Travis P. Lane

Subject: Visit to Property

At the time of visit G.E. French, son of G.R. French, the principal in the Company, was working with two men operating a dozer, etc. preparing a shipment destined for the cement plant at Clarkdale. Mr. French stated that the cement company has agreed to take 3,000 tons of gypsum for stockpile in advance of the plant start-up, and expects to take about 1500 TPM thereafter. Specifications are 1/4" to 1" sizing and 85% minimum $CaSO_4$.

Archive 1-W

DEPARTMENT OF MINERAL RESOURCES
STATE OF ARIZONA
FIELD ENGINEERS REPORT

Mine Larson | Date July 23, 1958

District Camp Verde, Yavapai Co. | Engineer Travis P. Lane

Subject: Visit to Property

Owner: Joe Larson
Jerome, Ariz.

Operator: Verde Gypsum Co.
2601 W. Jackson St.
Phoenix, Ariz.

Manager: Gordon R. French, address as above

Plant Supt: Bob Manifee, Camp Verde

The property comprises a number of contiguous placer claims totaling 1920 acres located in the Verde Valley, 5 miles southeasterly from Camp Verde. The deposit is an old lake bed on the top of a low mesa bordering the east side of the valley. The gypsum beds are exposed in the steep face of the mesa which rises to a maximum height of about 200 feet above the valley floor. Mining is being conducted in an open cut at the base of a hill slope. The camp and a screening plant with loading bunkers are situated near this open cut.

The exposures in the mining cut together with the results of exploratory work in old tunnels and open cuts and, more recently, in 20-30" diameter holes augered to a depth of 48 feet, have demonstrated a large extent of gypsum material averaging, according to the operators, approximately 85% $CaSO_4$. The surface of the mesa is soft gypsite material and this overlies crystalline gypsum (selenite) at depths of from several feet to about 15 feet, in the area developed. The deposit is limited on each side by its contact with limestone, but the work to date has not delimited the deposit in a westerly direction, nor in depth.

The surface gypsite assays 80-85% gypsum. In mining it is mixed with some of the underlying higher grade selenite and after screening to 16 M a product assaying 85% $CaSO_4$ is shipped as agricultural gypsum.

Although the major part of the deposit is a rather pure selenite, much of this material is discarded as oversize in the present screening process because it is crystalline and much harder than the gypsite. The company proposes to correct this situation by installing a hammer mill. They also hope to obtain a contract to furnish gypsum to the Clarkdale cement plant now under construction for the American Cement Corporation. The requirements of the plant are a grade of 93% $CaSO_4$ and a size of particle range of minus 1", plus 1/4". The Verde Gypsum Co. is confident that the main part of the deposit is sufficiently pure to meet the grade requirement -- when the gypsite is stripped off and the selenite is selectively mined for grade. A bid has been entered with the cement company to supply gypsum to the plant. It is reported that the nearby Wingfield gypsum property has been optioned to the Arizona Gypsum Co. and that this company is also bidding to furnish gypsum to the cement plant.

The screening plant consists of a feed hopper, conveyor belt, triple deck 4' x 10' Seco screen, and storage bunkers. Two of the decks are fitted with 16 M

screen to handle a divided feed. The third deck is blanked off. Maximum capacity of the plant is 400 tons per 8 hour shift. The gypsum is mined and transported to the plant by a bulldozer. No ripping or blasting is necessary.

The plant operated at an average rate of 200 TPD from Oct. 22, 1957 to Feb. 2, 1958, which is the period of greatest demand for agricultural gypsum. Normally the crew consists of 3 men. At present demand is light and the plant is operated intermittently by Mr. Manifee, the superintendent, working alone.

Geology & Mineralization Property comprises about 1600 acres and samples from 40 6o 95% pure.

Ore: Positive & Probable, Ore Dumps, TailingsPossible tonnage very large, perhaps in excess of 200,000,000 tons.

Mine, Mill Equipment & Flow-Sheet

Road Conditions, Route Good. (Camp Verde-Fossil Creek road crosses the property).

Water Supply

Brief History 7 feet sample taken from the face of a tunnel and ran by W. S. McRae of Los Angeles gave 23.68% sodium sulphate (Na_2So_4), and Mr. McRae stated that the sample was largely soluble calcite. W. A. Eaton, mining engineer of Los Angeles took the above sample, and makes the following statement: "experiments made by me with this material (ground) seemed to indicate that it was equal in cleansing qualities to the best household cleansers now on the market".

Special Problems, Reports Filed

Remarks

If property for sale: Price, terms and address to negotiate. Property is for sale on reasonable terms.

Signed JOE LARSON

Box 144, Jerome, Arizona.

Use additional sheets if necessary.

ML 8 08

DEPARTMENT OF MINERAL RESOURCES
STATE OF ARIZONA
OWNERS MINE REPORT

Date July 14, 1939

Mine Larson Gypsum Deposit

District Unknown

Location Clear Creek, six miles from Camp Verde, in an easterly direction, and 26 miles southeast of Clemenceau, closest point to Santa Fe R.R.

Former name

Owner Joe Larson, principal owner,

Address P. O. Box 144, Jerome, Arizona. Tel. 162.

Operator

Address

President

Gen. Mgr.

Mine Supt.

Mill Supt.

Principal Metals Gypsum

Men Employed

Production Rate

Mill: Type & Cap.

Power: Amt. & Type

Operations: Present

Operations Planned

Number Claims, Title, etc. 12 1/4 sections (of which 2 are not full claims). Title clear.

Description: Topog. & Geog. Level country surrounding the deposit, except to the north. Practically no overburden.

Mine Workings: Amt. & Condition About 1400 feet of shallow tunnels and shafts.

(over)

From the desk of

FRANK P. KNIGHT

From Arizona Republic
11-23-57

Active Mine:

VERDE GYPSUM Co., Gordon R. French, Phoenix, Pres.

Deposit 5 mi E of Camp Verde

Trucking 80 tons per day to Phoenix area for farm chemicals firms

Claim large reserves of 85% selenite in area of 1920 acres.

May 1, 1957

M. Gemmill reported:

✓ Larson Gypsum Deposit

✓ Joe Larson, Deceased