CONTACT INFORMATION
Mining Records Curator
Arizona Geological Survey
1520 West Adams St.
Phoenix, AZ 85007
602-771-1601
http://www.azgs.az.gov
inquiries@azgs.az.gov

The following file is part of the

Arizona Department of Mines and Mineral Resources Mining Collection

ACCESS STATEMENT

These digitized collections are accessible for purposes of education and research. We have indicated what we know about copyright and rights of privacy, publicity, or trademark. Due to the nature of archival collections, we are not always able to identify this information. We are eager to hear from any rights owners, so that we may obtain accurate information. Upon request, we will remove material from public view while we address a rights issue.

CONSTRAINTS STATEMENT

The Arizona Geological Survey does not claim to control all rights for all materials in its collection. These rights include, but are not limited to: copyright, privacy rights, and cultural protection rights. The User hereby assumes all responsibility for obtaining any rights to use the material in excess of "fair use."

The Survey makes no intellectual property claims to the products created by individual authors in the manuscript collections, except when the author deeded those rights to the Survey or when those authors were employed by the State of Arizona and created intellectual products as a function of their official duties. The Survey does maintain property rights to the physical and digital representations of the works.

QUALITY STATEMENT

The Arizona Geological Survey is not responsible for the accuracy of the records, information, or opinions that may be contained in the files. The Survey collects, catalogs, and archives data on mineral properties regardless of its views of the veracity or accuracy of those data.

PRINTED: 11/21/2002

ARIZONA DEPARTMENT OF MINES AND MINERAL RESOURCES AZMILS DATA

PRIMARY NAME: ARTILLERY PEAK

ALTERNATE NAMES:
HANNA
ARTILLERY MTN.

MOHAVE COUNTY MILS NUMBER: 405A

LOCATION: TOWNSHIP 12 N RANGE 13 W SECTION 36 QUARTER NW
LATITUDE: N 34DEG 20MIN 42SEC LONGITUDE: W 113DEG 34MIN 08SEC
TOPO MAP NAME: ARTILLERY PEAK - 15 MIN

CURRENT STATUS: EXP PROSPECT

COMMODITY:
MANGANESE

BIBLIOGRAPHY:
ADMMR ARTILLERY PEAK MINE FILE
"MINERAL & WATER RES. OF AZ" AZBM BULL 180,
P 217
BLM AMC FILE 10469
ADMMR ARTILLERY PEAK MANGANESE COLVO FILE

ARTILLERY PEAK MINE

REFERENCES

MOHAVE COUNTY
GREENWOOD DIST.
T12N R13W Sec. 36

Mohave County MILS index #405A

AKA: Hanna, Artillery Mtn.

ABM Bull. 180, p. 217

BLM AMC File #10469

Artillery Peak, AZ 15' Topo (included in file)

Artillery Peak
MOUNTAINS
SANDY
RIVER
Well
JEEP TRAIL
ROAD
Lake Mine
Chapin
Plancha Mtn
Loves Mine
Burro
Wash
Black Diamond Mine
Santa Maria
Neeve Mine
Priceless Mine
American Mine
SANTA MARIA R
MOHAVE CO
YUMA CO
Loves Camp
Browns Crossing
INDETERMINATE
BOUNDARY
RIVER
RESERVOIR
POINT ELEVATION 1235
ALAMO
WILLIAMS
BILL
MOHAVE CO
YUMA CO
ALAMO
FENCE
Mine
Spring
Williams 2038
BM 1056
BM 1060
Cem
Alamo Crossing
NORMAL POOL ELEV 1070
Grave
Cem
Springs
Bullard
Wash
Landing Strip
BM 1262
ROAD
JEEP TRAIL
T. 12 N.
T. 11 N.
R. 13 W.
R. 12 W.
34°15'
113°30'
WICKENBURG 55 MI.
INTERIOR—GEOLOGICAL SURVEY, WASHINGTON, D. C.—1968—T
1:62500
4 MILES
21000 FEET
5 KILOMETERS
RVAL 80 FEET
NT 40-FOOT CONTOURS
N SEA LEVEL
ROAD CLASSIFICATION
Light-duty
Unimproved dirt
ARIZONA
QUADRANGLE LOCATION
AL MAP ACCURACY STANDARDS
COLORADO 80225, OR WASHINGTON, D. C. 20242
ND SYMBOLS IS AVAILABLE ON REQUEST
ARTILLERY PEAK, ARIZ.
N3415—W11330/15
Artillery Peak Mine
T 12 N R 13 W Sec 36

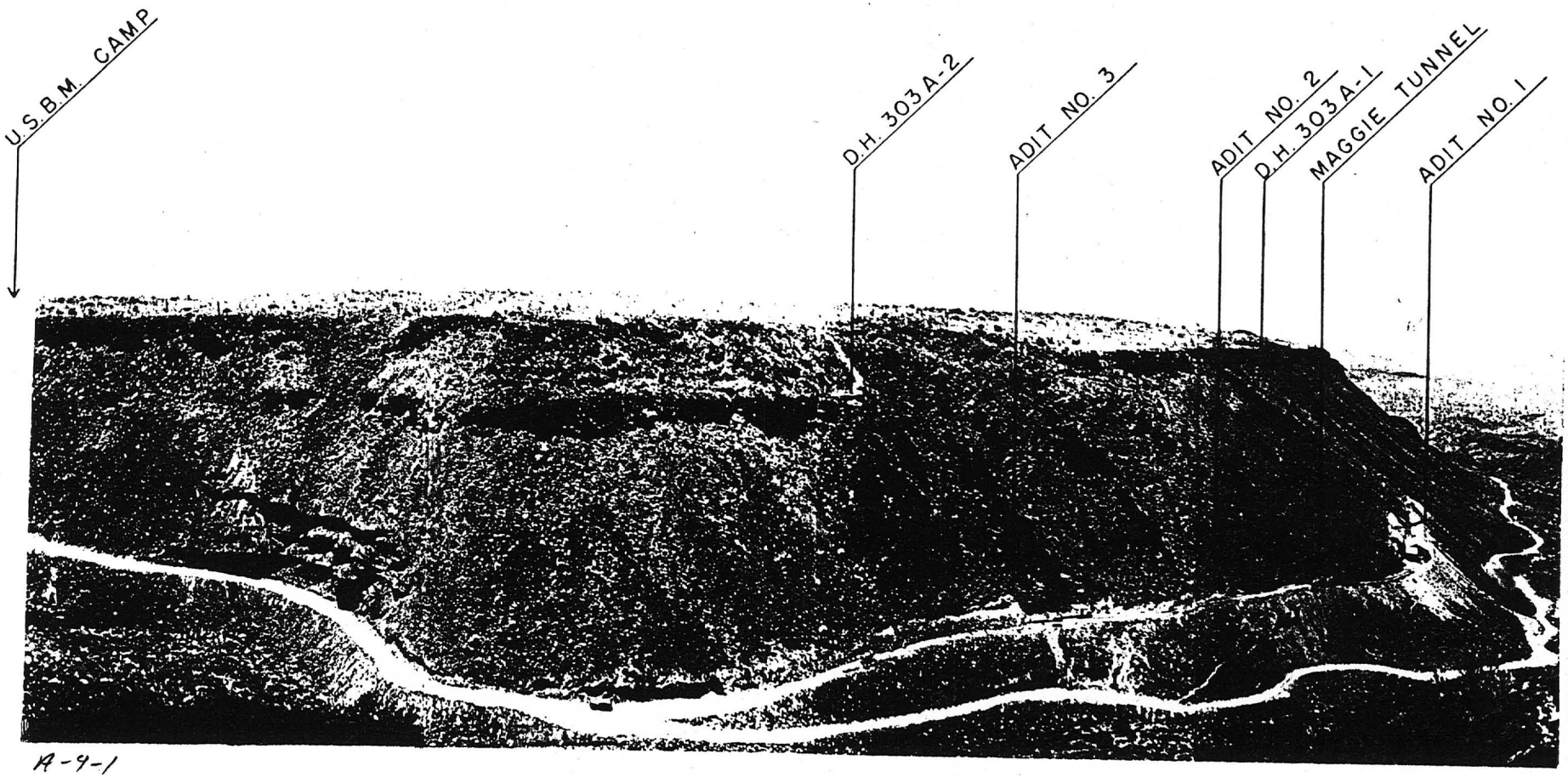

A-9-1

FIGURE 3.-ARTILLERY PEAK PROJECT IN MAGGIE CANYON.

ARIZONA MANGANESE CORP.

MAY 27, 1957

Various of the mines owned by this company have been leased to different operators during the past few years as follows:

✓Price & Priceless-to Mohave Mining & Milling Co. - still operating.

✓Maggie - to Stovall Mining Co. - now idle.

✓Shannon - to unknown operator - now idle.

MARK GEMMILL

See: MINING WORLD, Dec. 1958, p 58

USBM IC 7843 p. 29 - 45
ABM Bul. 137 p. 76
Maps upstairs in the flat file area, 5th drawer 2

May 27, 1957

ARTILLERY PEAK MINE
(ARIZONA MANGANESE CORP.)

MOHAVE COUNTY
ARTILLERY PEAK

See: IC 7843, p. 41, 44
See: ABM Bull. 127, p. 76

No information on this property.

MARK GEMMILL

Shannon - Sec 1, T 11N, R 13W -
Price & Trudeau Sec 12, T 11N, R 13W IC 7843 p31
Maggie Sec 29, 30, T 12N, R 13W, IC 7843 pp 29, 44,

DEPARTMENT OF MINERAL RESOURCES
STATE OF ARIZONA

FIELD ENGINEERS REPORT

Mine: Arizona Manganese Corp.

Date: May 1, 1952

District: Artillery Peak

Engineer: Mark Gemmill

Subject: Present Status

This company headed by D. D. Corum, Box 1006, Wickenburg owns several manganese properties in the Artillery Peak area and have been getting ready to operate for the past months. Mr. Corum told me recently that he is trying to get a mill installed which could treat the ore from several of the deposits.

It is my understanding that this company owns the Lone Star, Shannon, Price, Priceless and others, all of which show considerable tonnage exposed

DEPARTMENT OF MINERAL RESOURCES
STATE OF ARIZONA

FIELD ENGINEERS REPORT

Mine: Arizona Manganese Corp.

Date: May 1, 1952

District: Artillery Peak

Engineer: Mark Gemmill

Subject: Present Status

This company headed by D. D. Corum, Box 1006, Wickenburg owns several manganese properties in the Artillery Peak area and have been getting ready to operate for the past months. Mr. Corum told me recently that he is trying to get a mill installed which could treat the ore from several of the deposits.

It is my understanding that this company owns the Lone Star, Shannon, Price, Priceless and others, all of which show considerable tonnage exposed

MEMO TO CHARLES F. WILLIS

Washington, D.C.
Dec. 13, 1942

DEPT. MINERAL RESOURCES
DEC 15 1942
PHOENIX, ARIZONA

SUBJECT: Artillery Peak, other manganese projects.
Letter CFW to Don Gustin.

The copy of your letter to Gustin regarding access roads to the Artillery Peak district for additional reasons than the manganese deposit.

It seems to me that the fluxing ore angle is the best way to get at this matter, even though WPB seems to be taking a rather stupid stand even on this important situation in their urge to keep gold mines closed (although they are not very consistent, as witness the Golden Cycle and other relaxations of the order).

I am reliably informed that orders have gone out to withhold if not to withdraw, P-56 certificates from all but high-grade manganese projects.

Possibly this will actually affect only new enterprises but it is another example of what is happening due to withdrawal of materials from mining, or it may be that the manganese situation has eased up more than is generally realized. Also, one could interpret the trend as in other metals, that it is considered that the present stock-pile plus present production will carry us through. This is pure speculation on my part, of course.

CC/ Gustin

Bill Broadgate

DEPT. MINERAL RESOURCES
RECEIVED
SEP 12 1942
PHOENIX, ARIZONA

CONFIDENTIAL

Washington, D.C.
Sept. 10, 1942

SUBJECT: Artillery Peak

In talking with Senator Henderson the other day he let slip the statement ~~that Artillery~~ "we will be doing something about Artillery Peak".

I did not want to question him as it was more or less aside, but I pass it on for what it is worth.

Bill

Bill Broadgate

June 3, 1942 OPERATING MINES,
Mohave County

DEPT. MINERAL RESOURCES
RECEIVED
JUN 8 1942
PHOENIX, ARIZONA

To: J. S. Coupal

From: Elgin B. Holt

MANGANESE ORE COMPANY: This company is a subsidiary of the M. A. Hanna Company. Properties, known as ARTILLERY PEAK, are located in Mohave County, six miles north and east of Alamo Crossing on the Williams River. Robert A. Elgin, Field Engineer, is in charge of exploratory work now being conducted.

EXPLORATORY WORK, now under way, consists of diamond drilling by the Sullivan Machinery Company; three diamond drilling machines being used and 18 operatives employed by the Sullivan company. The Manganese Ore Company is working six men, consisting of engineers, samplers, etc.

Had a talk with Mr. Elgin and he stated that the object of present work was to fill in diamond drill data and supplement work done previously.

ABSOLUTELY CONFIDENTIAL: At first Mr. Elgin did not want to give me any information at all, stating that his company did not want any publicity. However, after I had assured him that any information he wanted to give me would not be published, he then gave me the meager ~~dix~~ data, as above set forth.

MANGANESE PLANT AT ARTILLERY PEAK: I asked him if the present work was for the purpose of rounding out information with a view to a plant being erected? He answered, as far as he knew, his company is not planning to build a plant in the near future; that if such is their intentions, he, Elgin, did not know anything about it.

EBH.

ARTILLERY PEAK MOHAVE COUNTY

RRB WR10/9/81: Also got a report that a Tucson outfit is looking at the Maggie Mine in the Artillery Peak area. They are reportedly investigating the use of the dithionate process to leach manganese.

DEPARTMENT OF MINERAL RESOURCES
State of Arizona
MINE OWNER'S REPORT

Arizona Manganese Corp. Date Feb 6, 1948

1. Mine: Artillery Peak

2. Location: Sec. ..... Twp. ..... Range ..... Nearest Town .....

   Distance ..... Direction ..... Road Condition .....

3. Mining District & County: .....

4. Former Name of Mine: .....

5. Owner: D. D. Corum V. P. & Mgr.

   Address: 231 S. LaSalle St. Chicago, Ill.

   Local address Solomon Ariz.

6. Operator: 90 Wm A. Baehr organization

   Address: .....

7. Principal Minerals: .....

8. Number of Claims: ..... Lode ..... Placer .....

   Patented ~~26~~ 38 Unpatented 20

9. Type of Surrounding Terrain: .....

10. Geology & Mineralization: .....

11. Dimension & Value of Ore Body: .....

12. Ore "Blocked Out" or "In Sight":

Ore Probable:

13. Mine Workings—Amount and Condition:

No.	Feet	Condition
Shafts		
Raises		
Tunnels		
Crosscuts		
Stopes		

14. Water Supply:

15. Brief History:

16. Signature:

17. If Property for Sale, List Approximate Price and Terms:

DEPARTMENT OF MINERAL RESOURCES
State of Arizona
MINE OWNER'S REPORT

Arizona Manganese Corp. Date Feb 6, 1948

1. Mine: Artillery Peak

2. Location: Sec. ..... Twp. ..... Range ..... Nearest Town .....

Distance ..... Direction ..... Road Condition .....

3. Mining District & County: .....

4. Former Name of Mine: .....

5. Owner: D. D. Corum V. P. & Mgr.

Address: 231 S. La Salle St. Chicago, Ill.

Local address Solomg Ariz.

6. Operator: 90 Wm A. Baehr organization

Address: .....

7. Principal Minerals: .....

8. Number of Claims: ..... Lode ..... Placer .....

Patented ~~26~~ 38 Unpatented 20

9. Type of Surrounding Terrain: .....

10. Geology & Mineralization: .....

11. Dimension & Value of Ore Body: .....

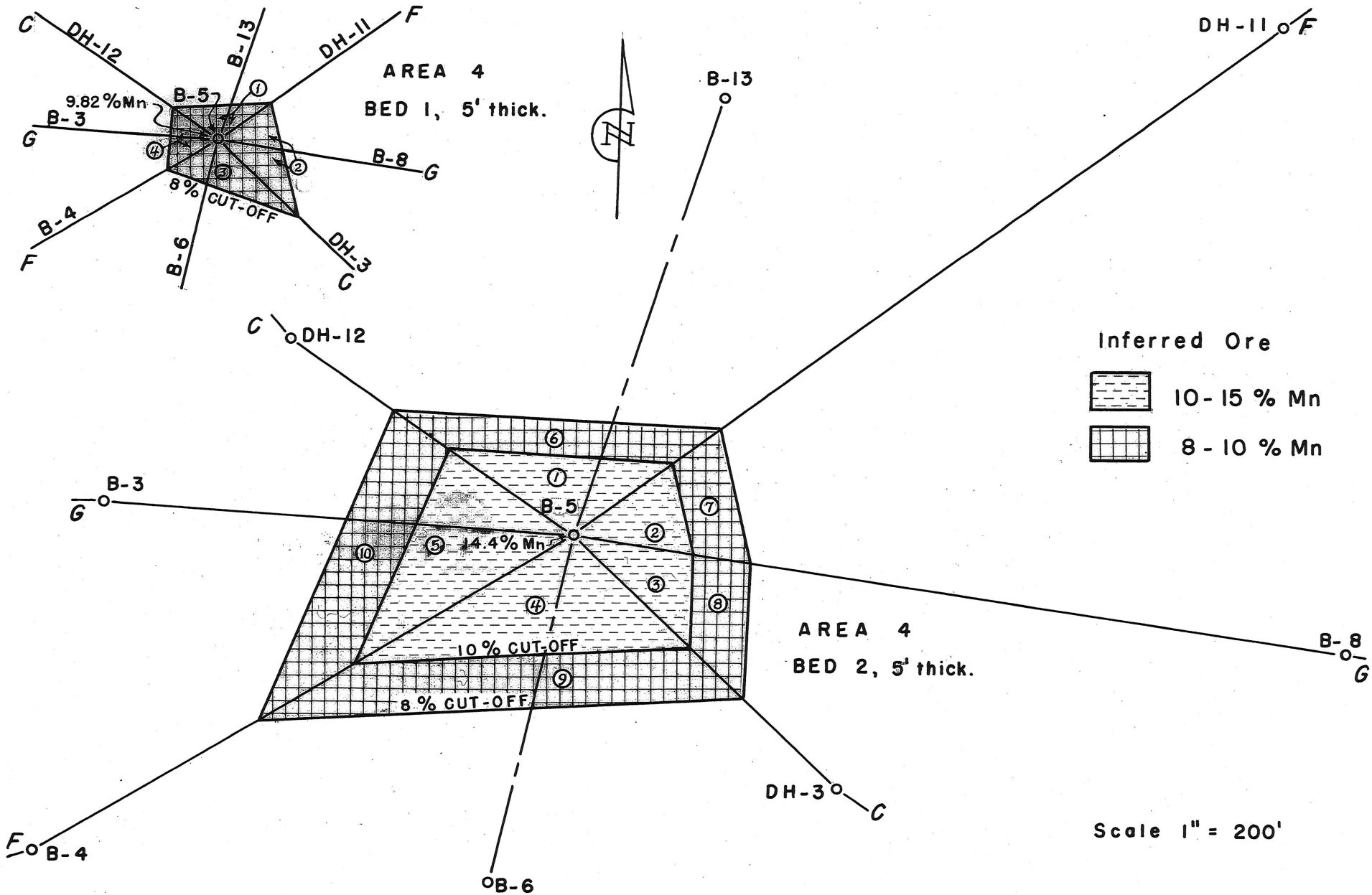

FIG. 22 - ORE RESERVE BLOCKS, ARTILLERY PEAK MANGANESE, PROJ. 303, MOHAVE CO. ARIZ.

COPIES

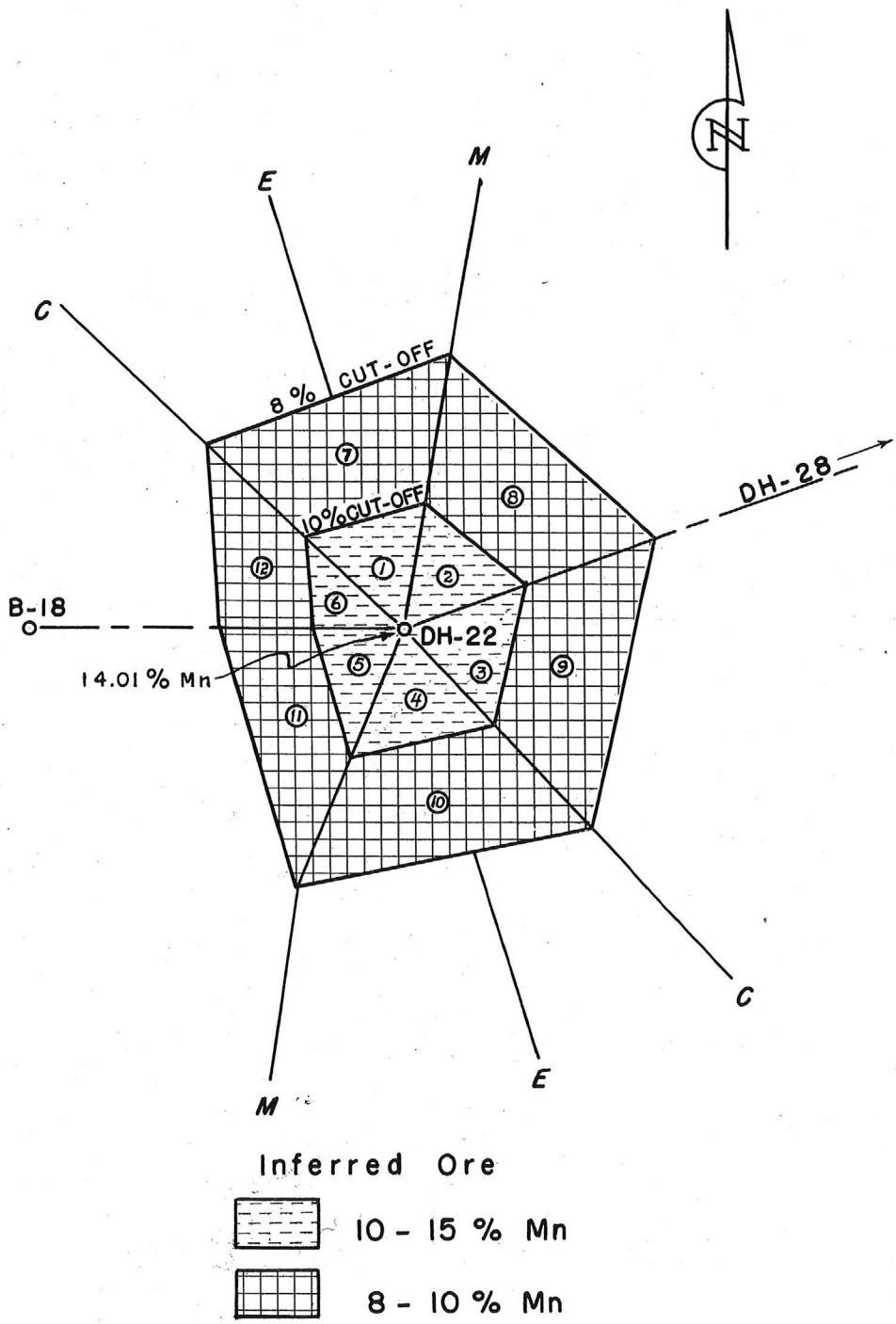

AREA 6 - BED 1, 14' thick. Scale 1" = 200'

FIG. 24 - ORE RESERVE BLOCK, ARTILLERY PEAK MANGANESE, ARIZONA.

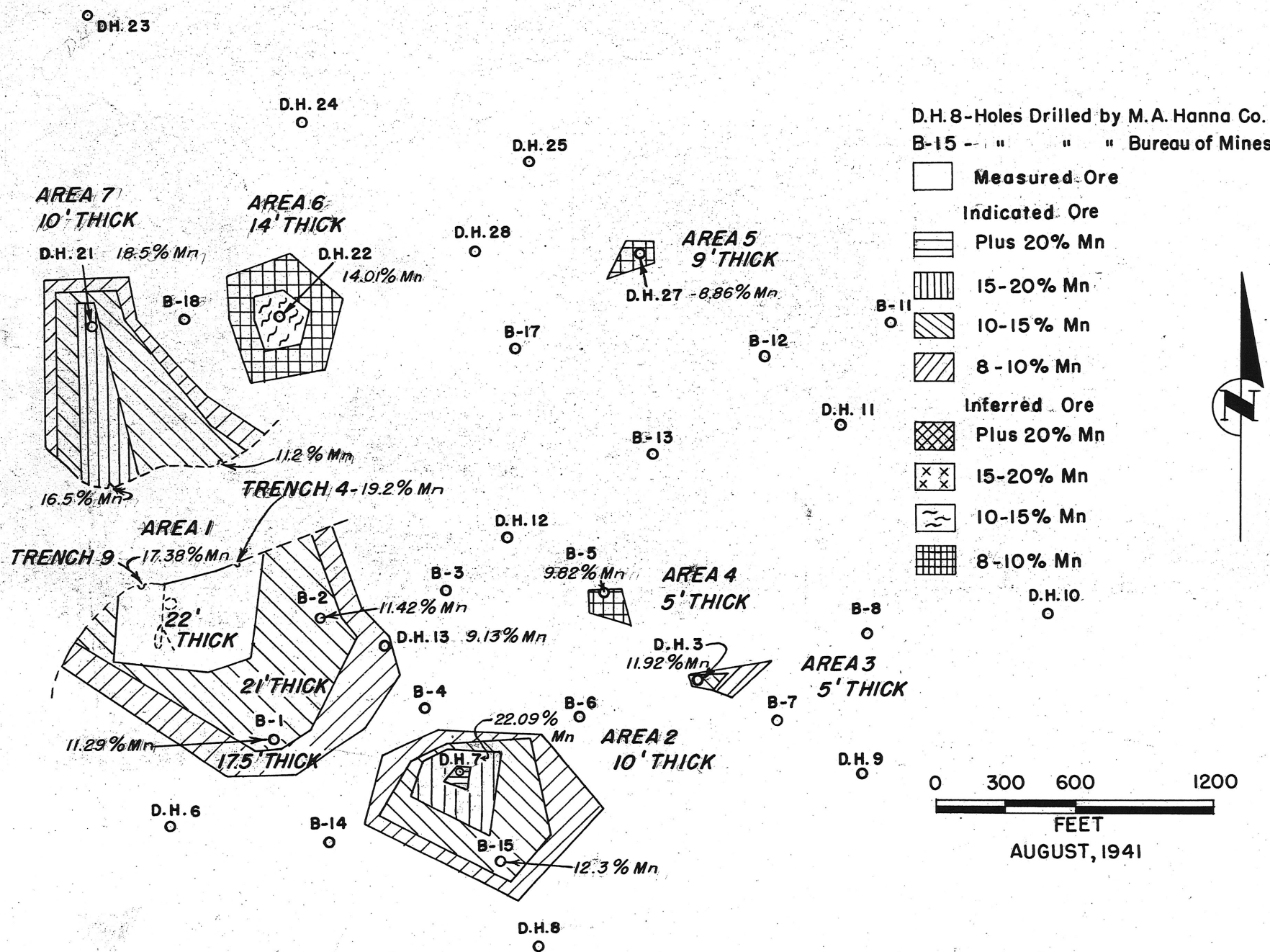

FIG. 13-ORE RESERVE BLOCKS, BED I, ARTILLERY PEAK MANGANESE, PROJ. 303, MOHAVE CO., ARIZ.

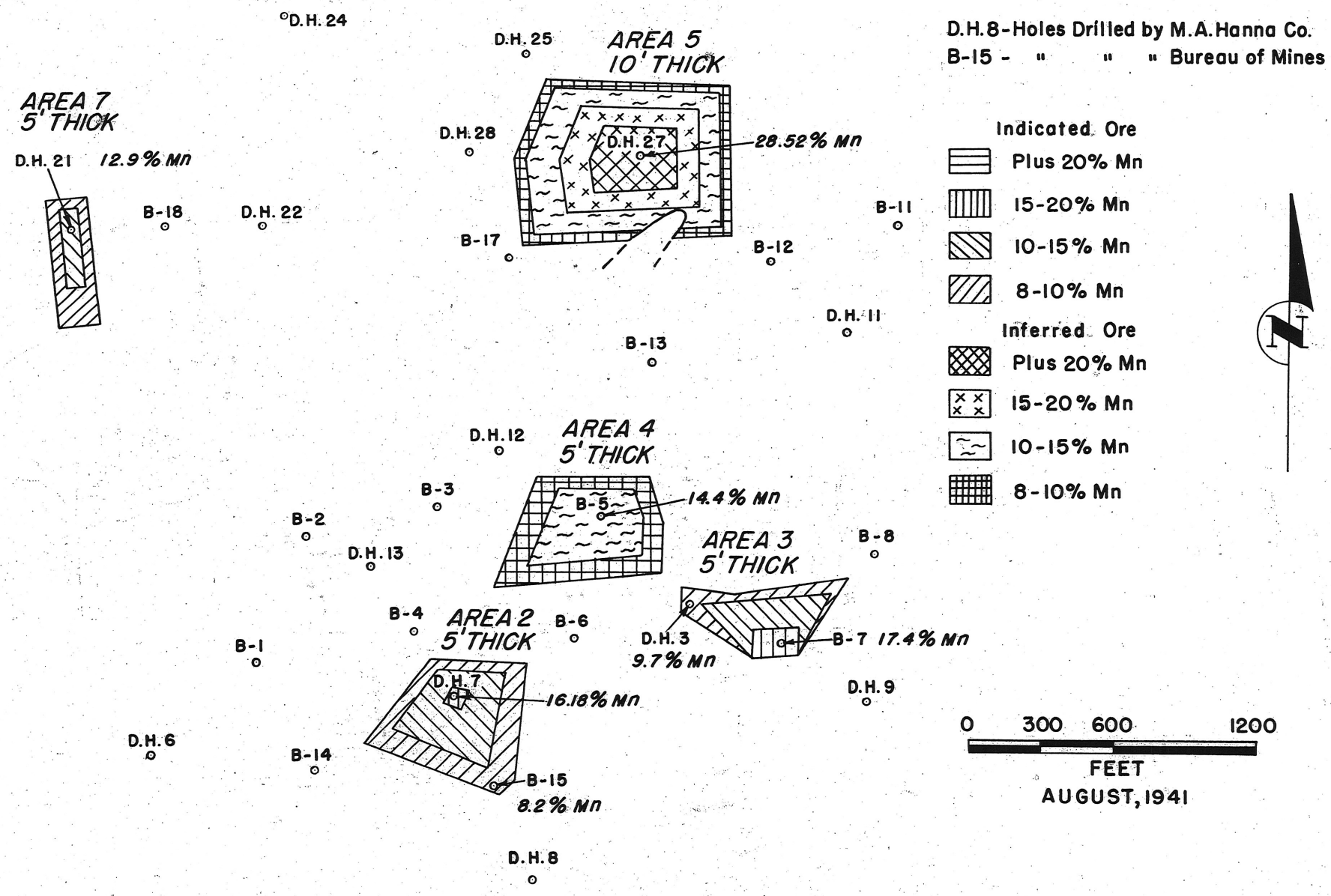

FIG. 14-ORE RESERVE BLOCKS, BED 2, ARTILLERY PEAK MANGANESE, PROJ. 303, MOHAVE CO., ARIZ.

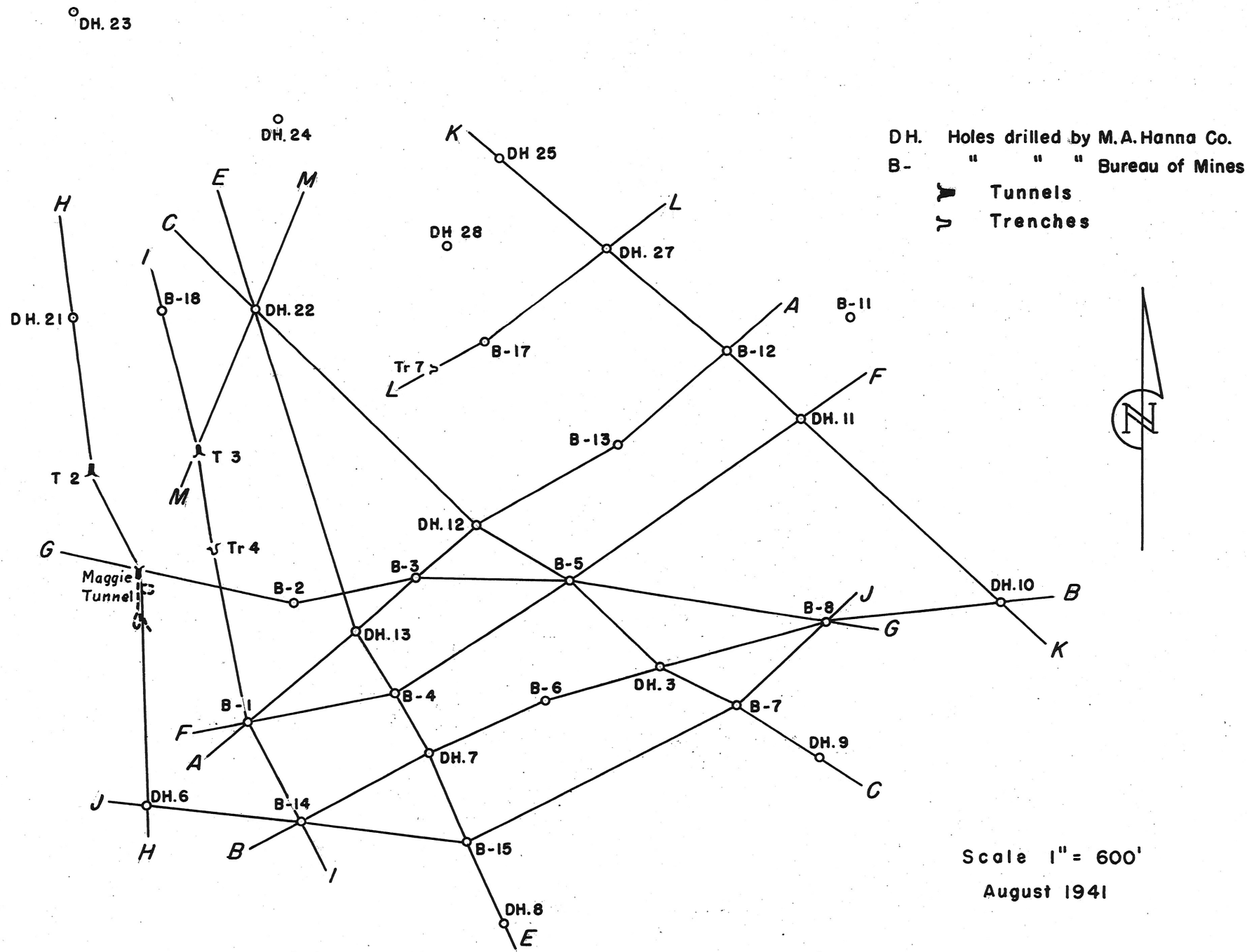

FIG.16- SECTIONS USED IN RESERVE ORE ESTIMATES, ARTILLERY PEAK MANGANESE PROJ. 303, MOHAVE CO., ARIZONA.

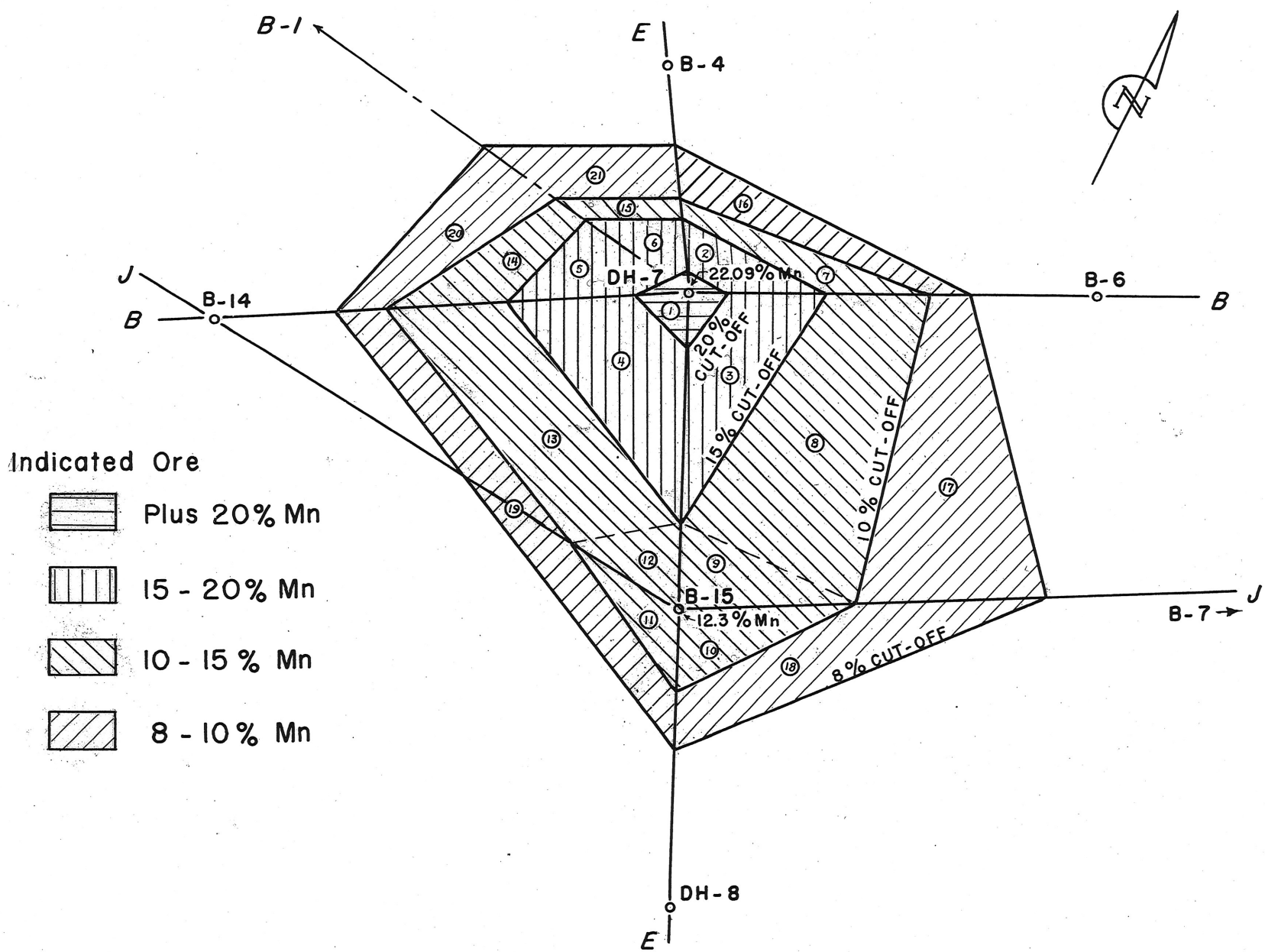

AREA 2, BED 1 10' thick. Scale 1" = 200'

FIG. 18 - ORE RESERVE BLOCK, ARTILLERY PEAK MANGANESE, PROJ. 303, MOHAVE CO. ARIZ.

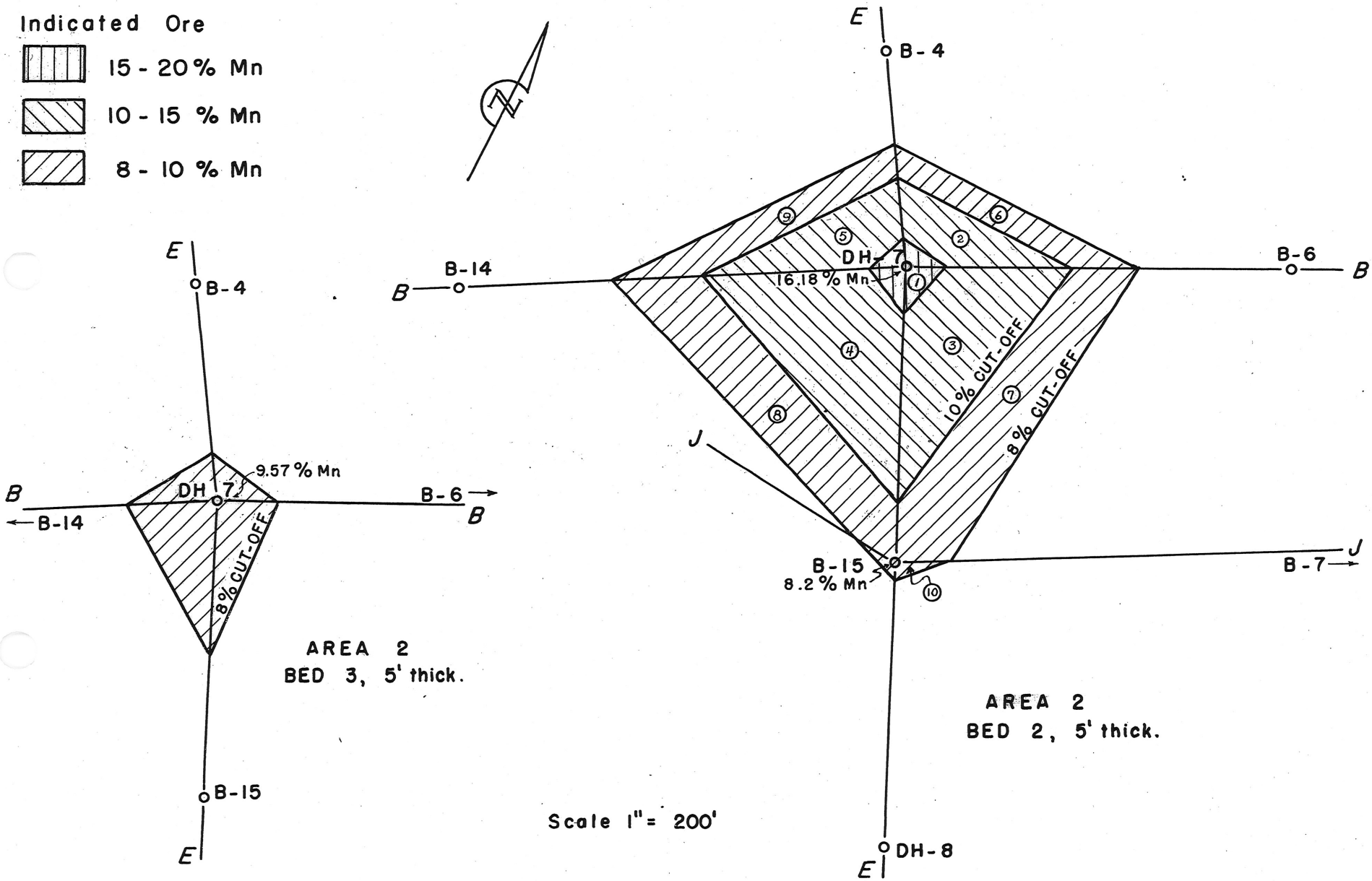

FIG. 19 - ORE RESERVE BLOCKS, ARTILLERY PEAK MANGANESE, PROJ. 303, MOHAVE CO. ARIZ.

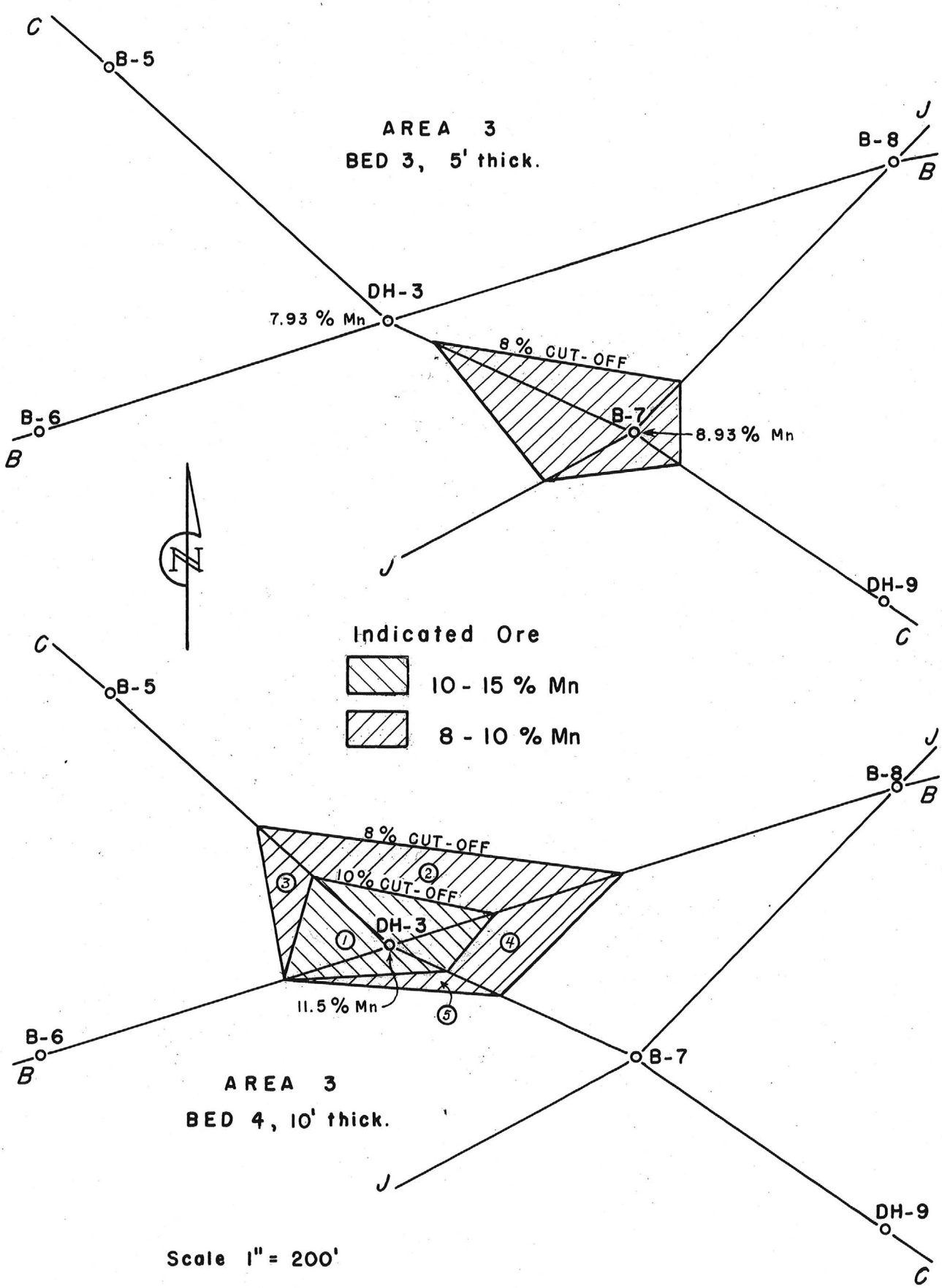

FIG. 21 - ORE RESERVE BLOCKS, ARTILLERY PEAK MANGANESE, ARIZONA

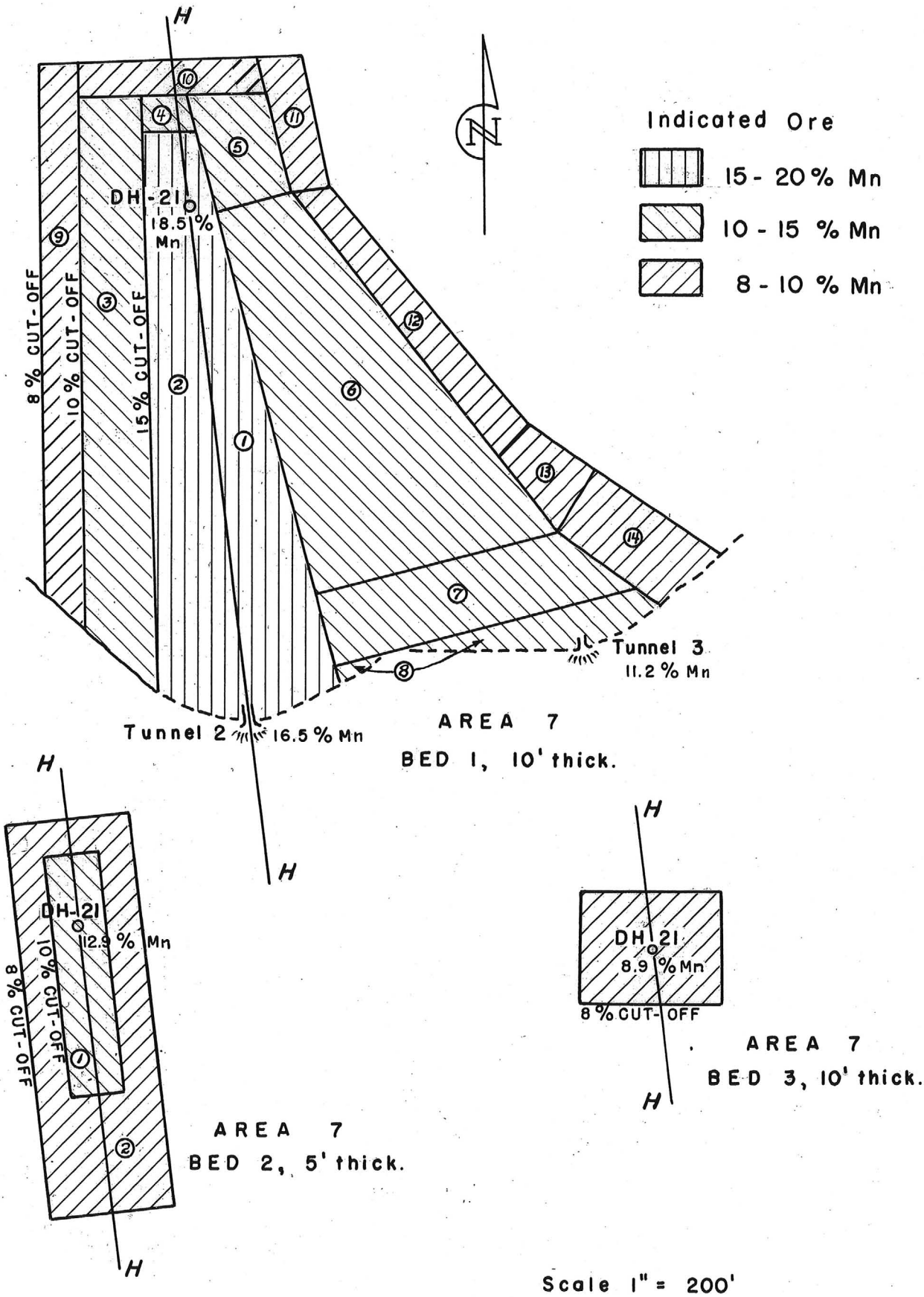

FIG. 25 - ORE RESERVE BLOCKS, ARTILLERY PEAK MANGANESE, ARIZONA.

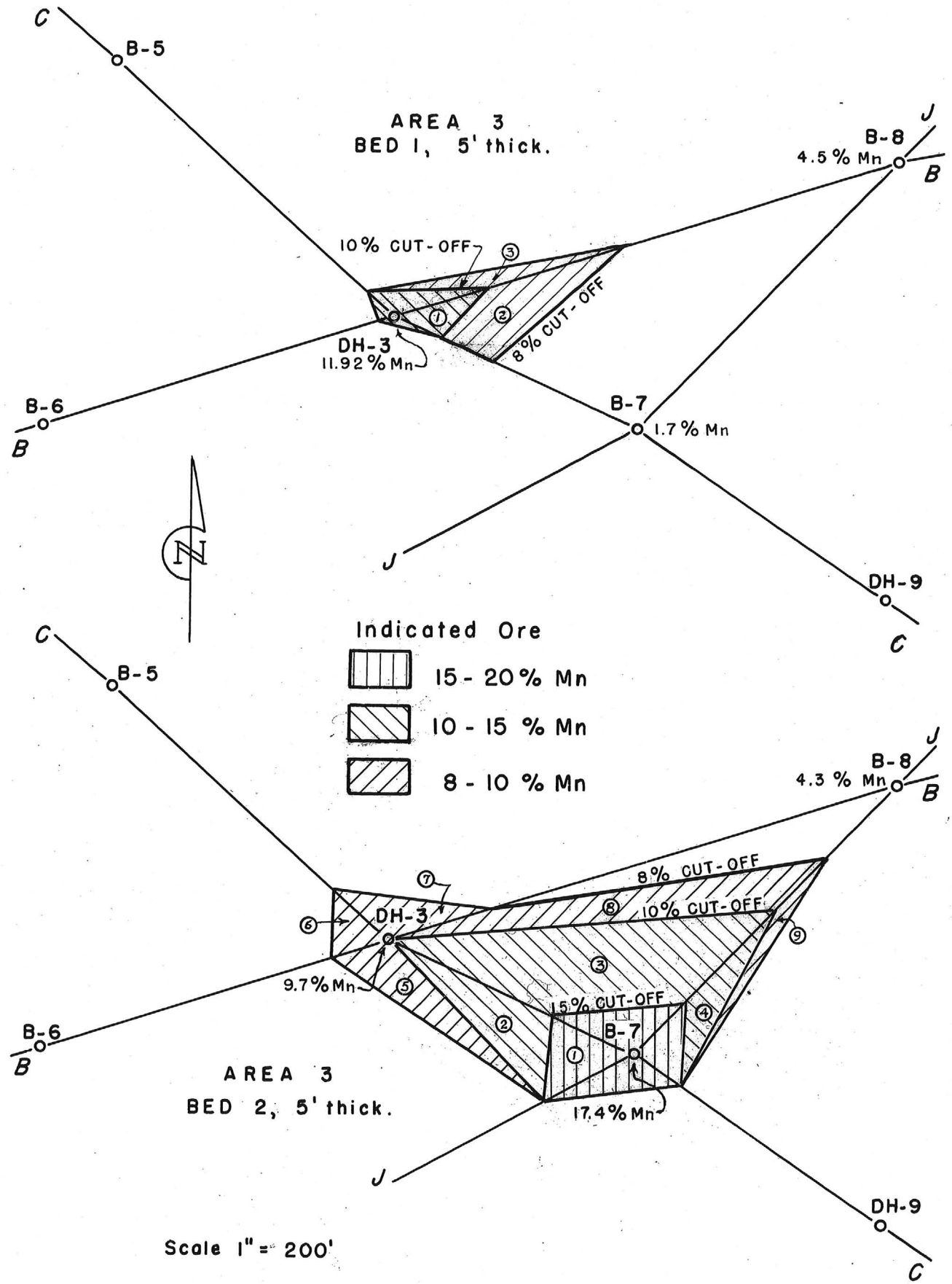

FIG. 20- ORE RESERVE BLOCKS, ARTILLERY PEAK MANGANESE, ARIZONA.

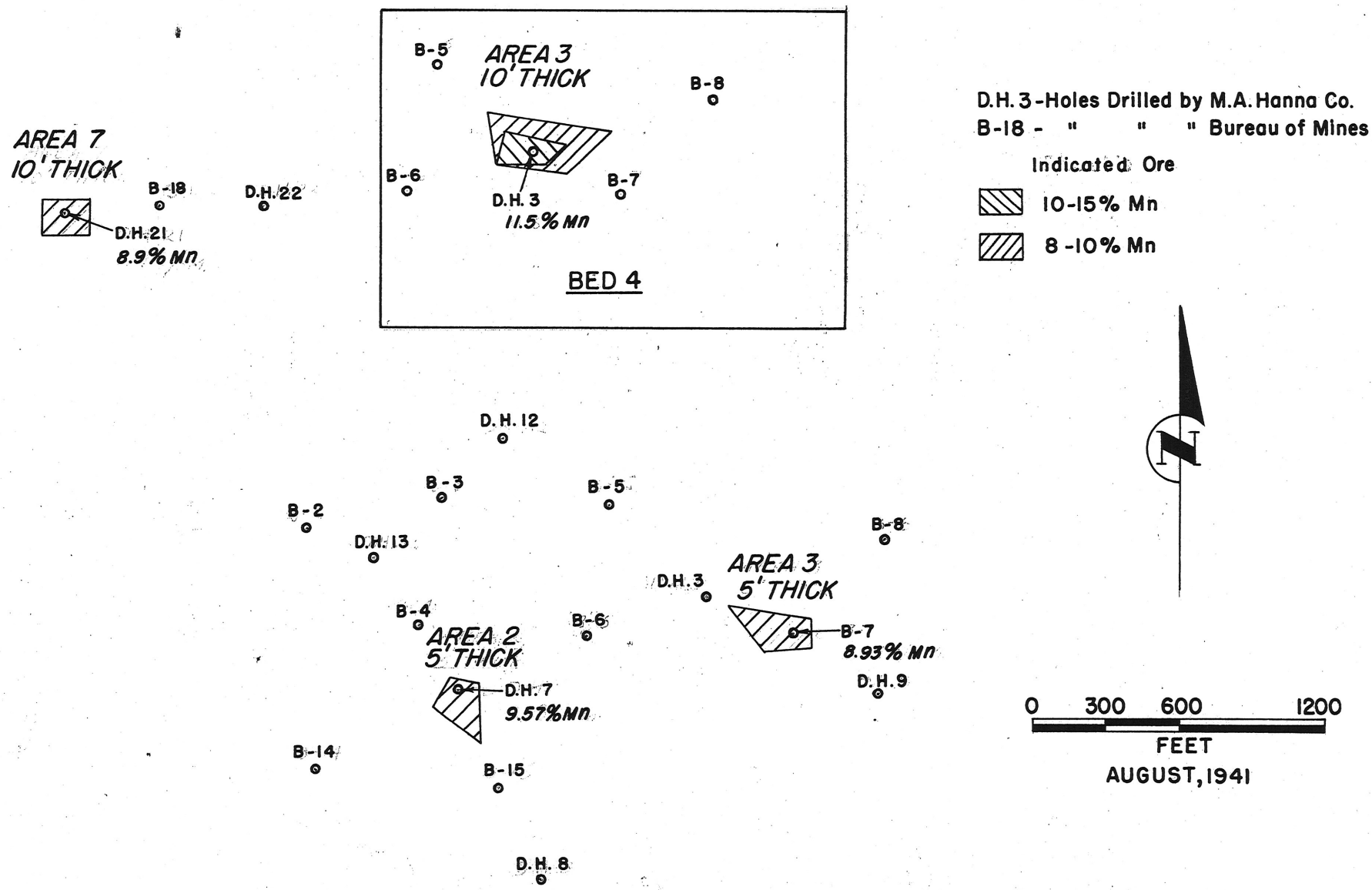

FIG.15-ORE RESERVE BLOCKS, BEDS 3 & 4, ARTILLERY PEAK MANGANESE, PROJ.303, MOHAVE CO., ARIZ.

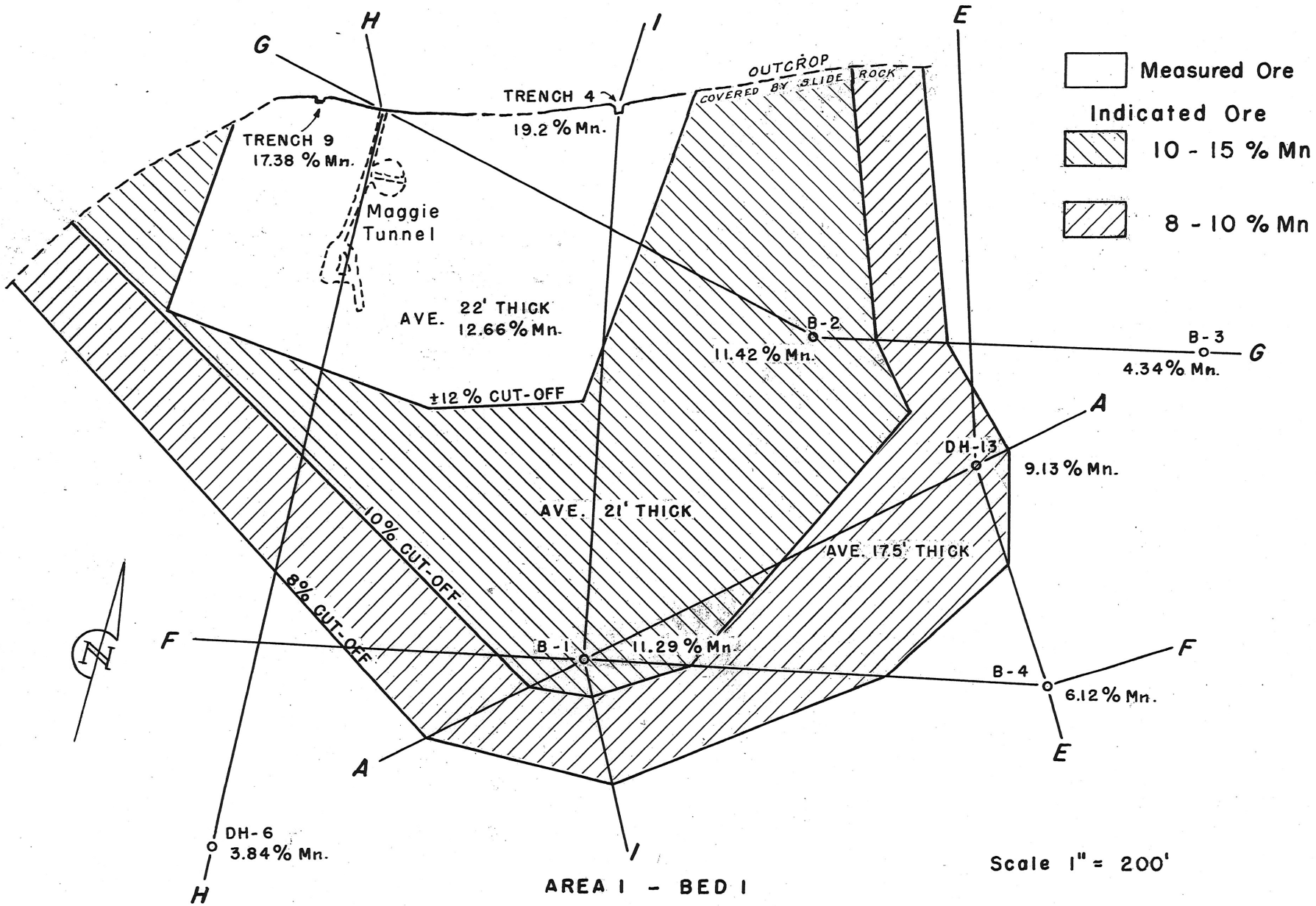

FIG. 17 - ORE RESERVE BLOCK, ARTILLERY PEAK MANGANESE, PROJ. 303, MOHAVE CO. ARIZ.

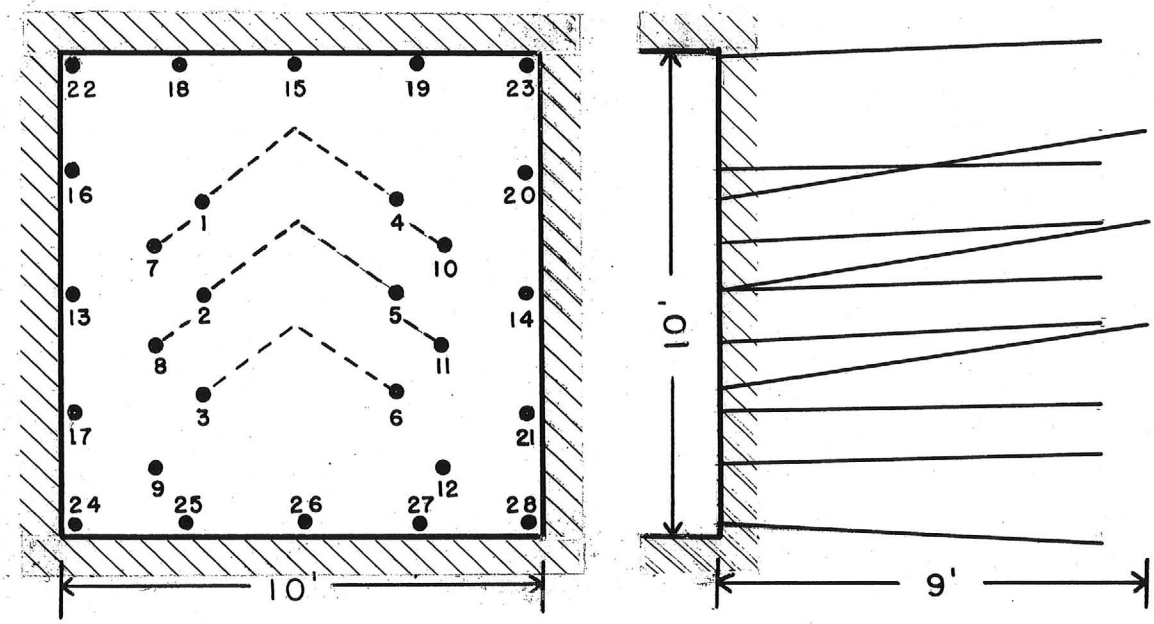

Drill Round

HOLE NOS.	DEPTH PER HOLE	DEPTH TOT.	BLASTING DELAY NO.	CAPS TOT.	STICKS OF DYN. PER HOLE	STICKS OF DYN. TOT.
1 TO 6	10 FT.	60FT.	0	6	12	72
7 TO 12	8 FT.	48FT.	1	6	9	54
13 TO 14	8 FT.	16FT.	2	2	8	16
15	8 FT.	8FT.	2	1	7	7
16 TO 21	8 FT.	48FT.	3	6	7	42
22 TO 23	8 FT.	16FT.	4	2	8	16
24 TO 28	8 FT.	40FT.	5	5	12	60
	TOTAL	236FT.		28		267

Figure 12.- Drill round sketch and table.

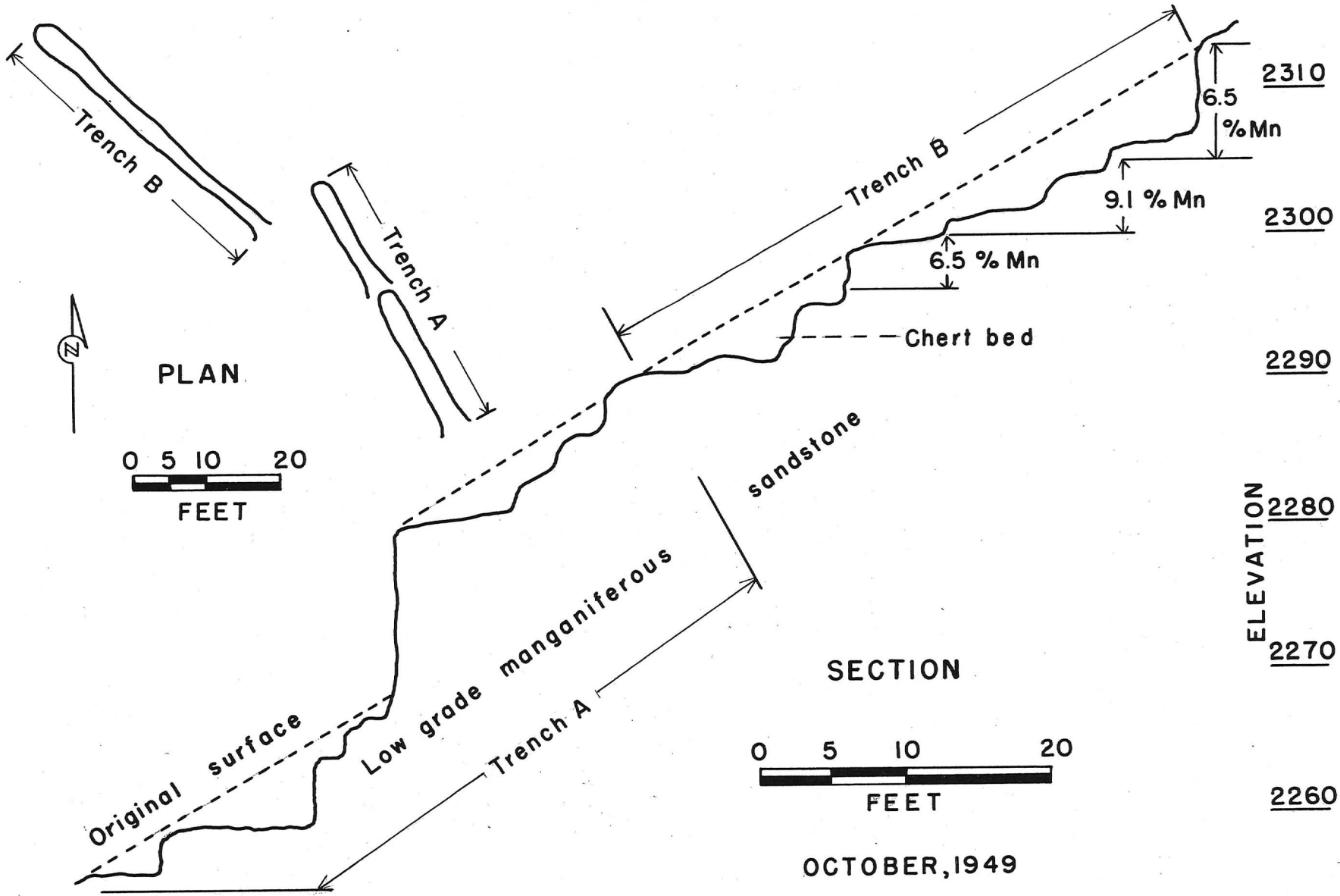

FIGURE 11.- ASSAY MAP OF MANGANESE CLIFF TRENCHES

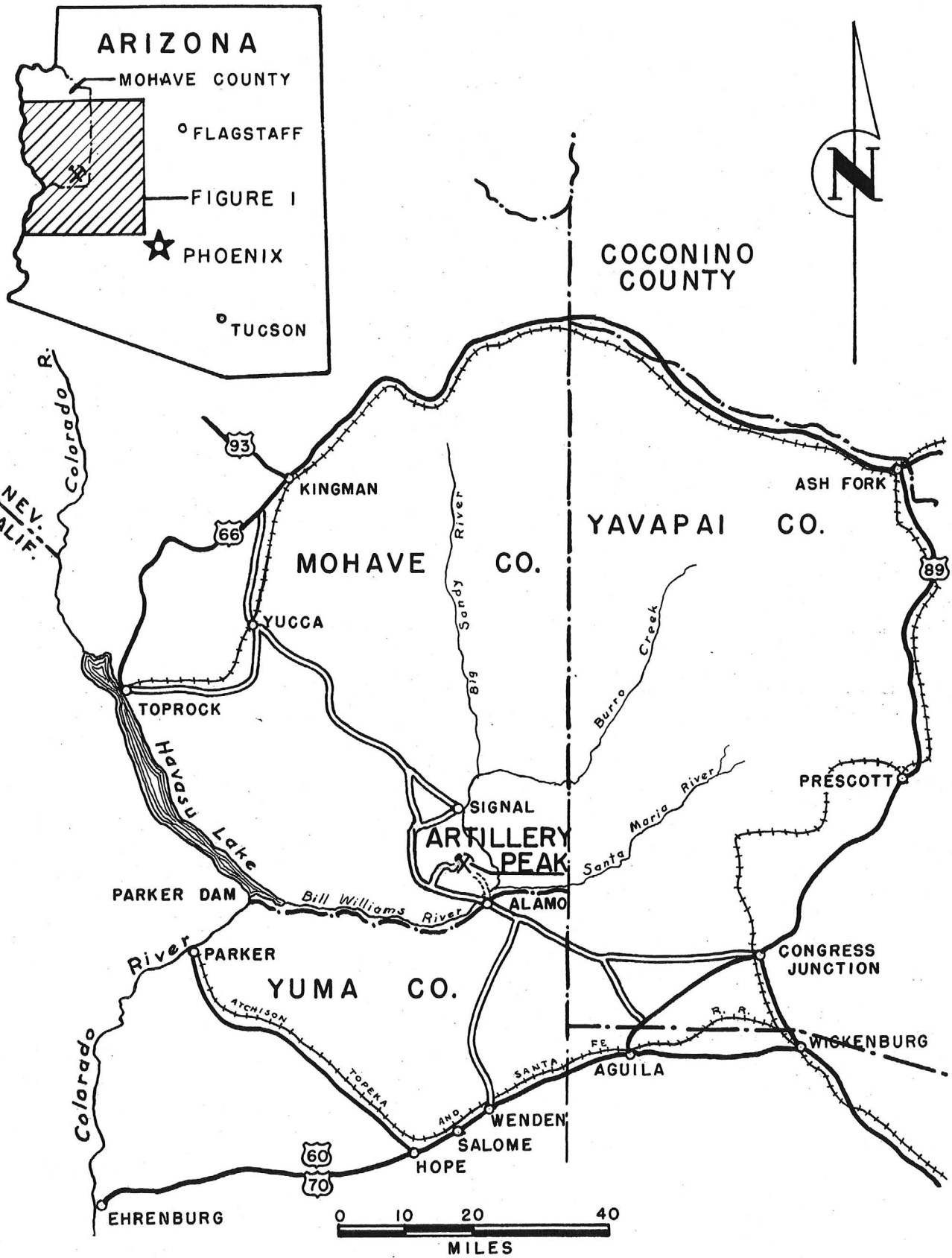

FIGURE 1.- LOCATION MAP, ARTILLERY PEAK MANGANESE DEPOSITS

2-C-1

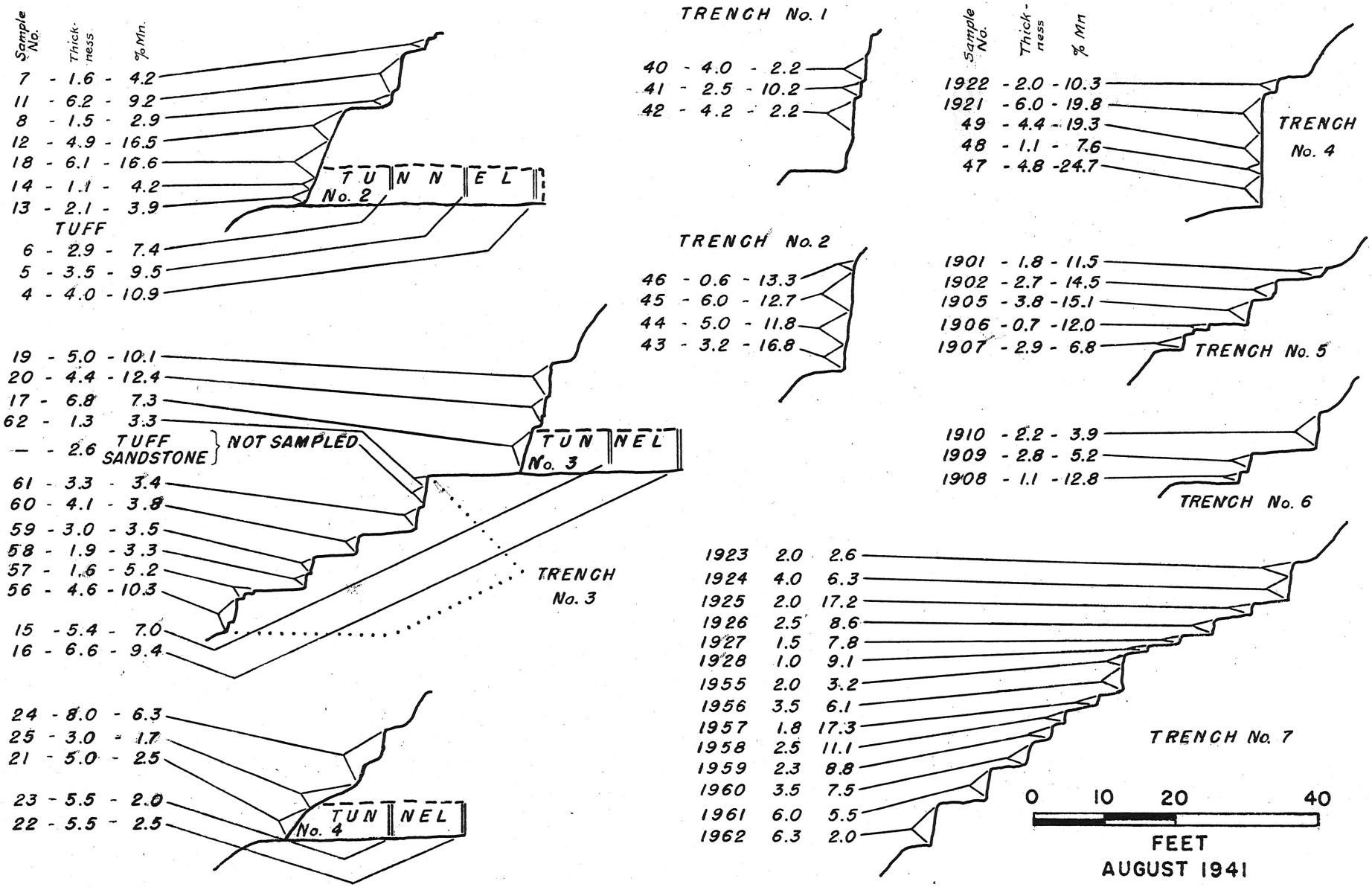

FIG. 3 - TUNNEL AND TRENCH SECTIONS, ARTILLERY PEAK MANGANESE, PROJ. 303, MOHAVE CO., ARIZ.

Front Size

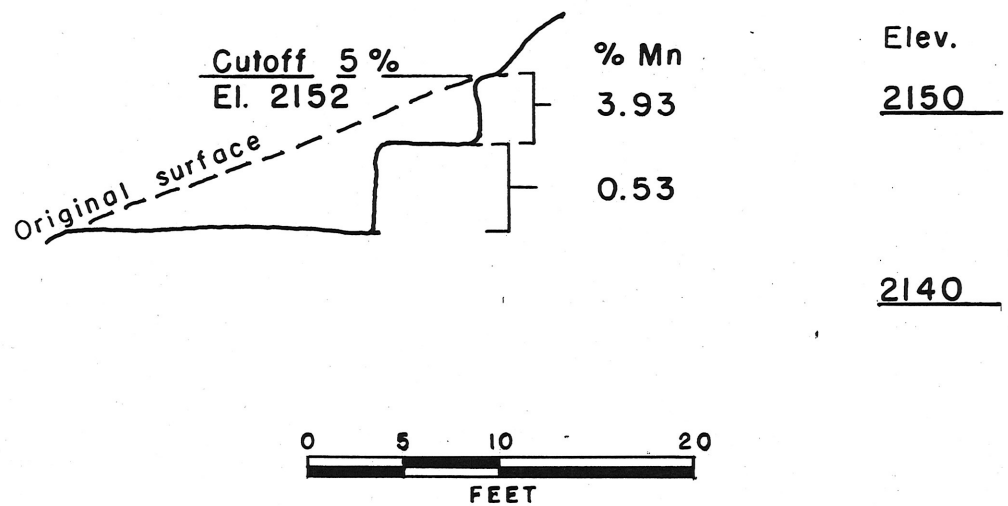

JULY, 1949

Figure 10.- Section assay map of trench 9 a.

3-c-10

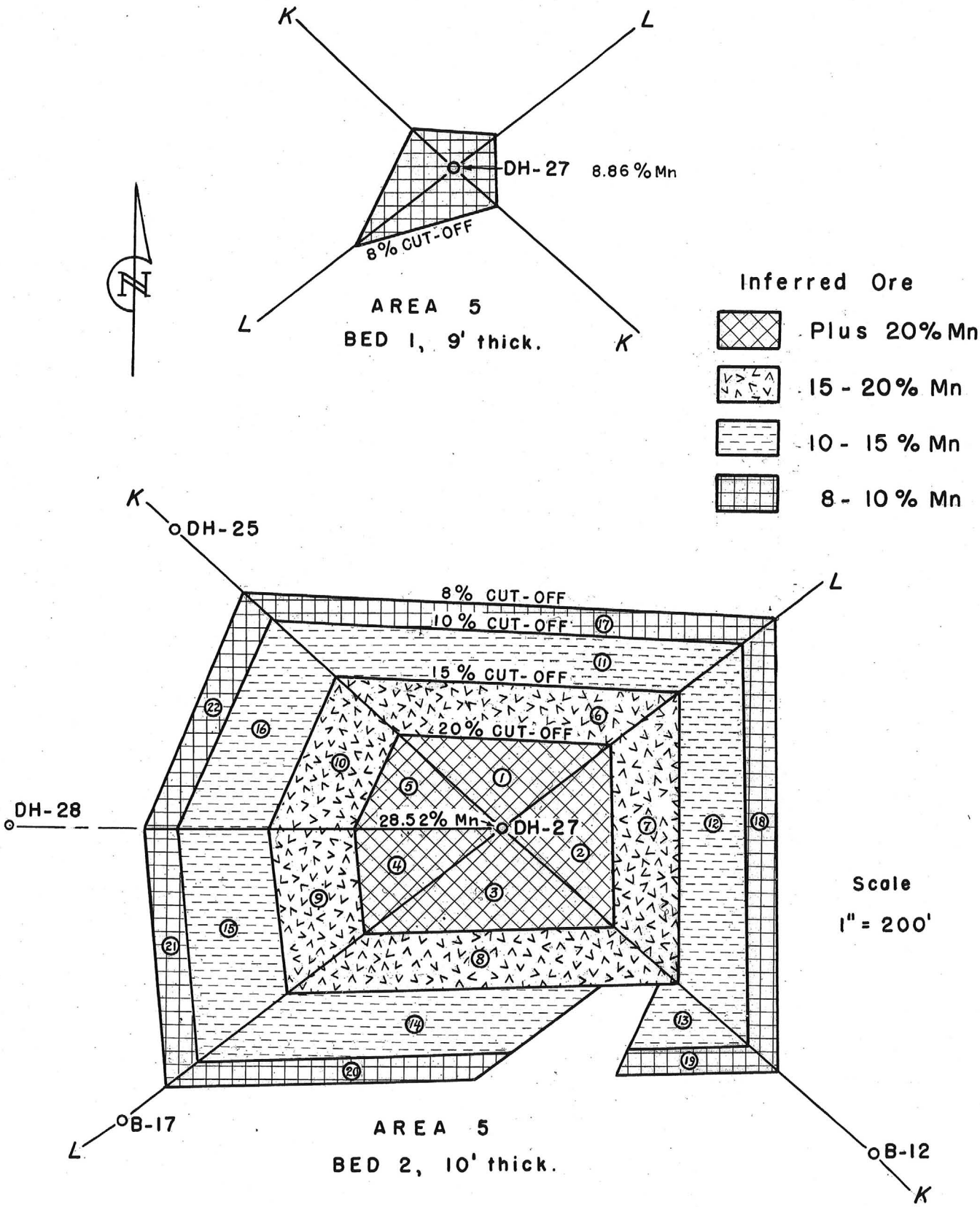

FIG. 23- ORE RESERVE BLOCKS, ARTILLERY PEAK MANGANESE, ARIZONA

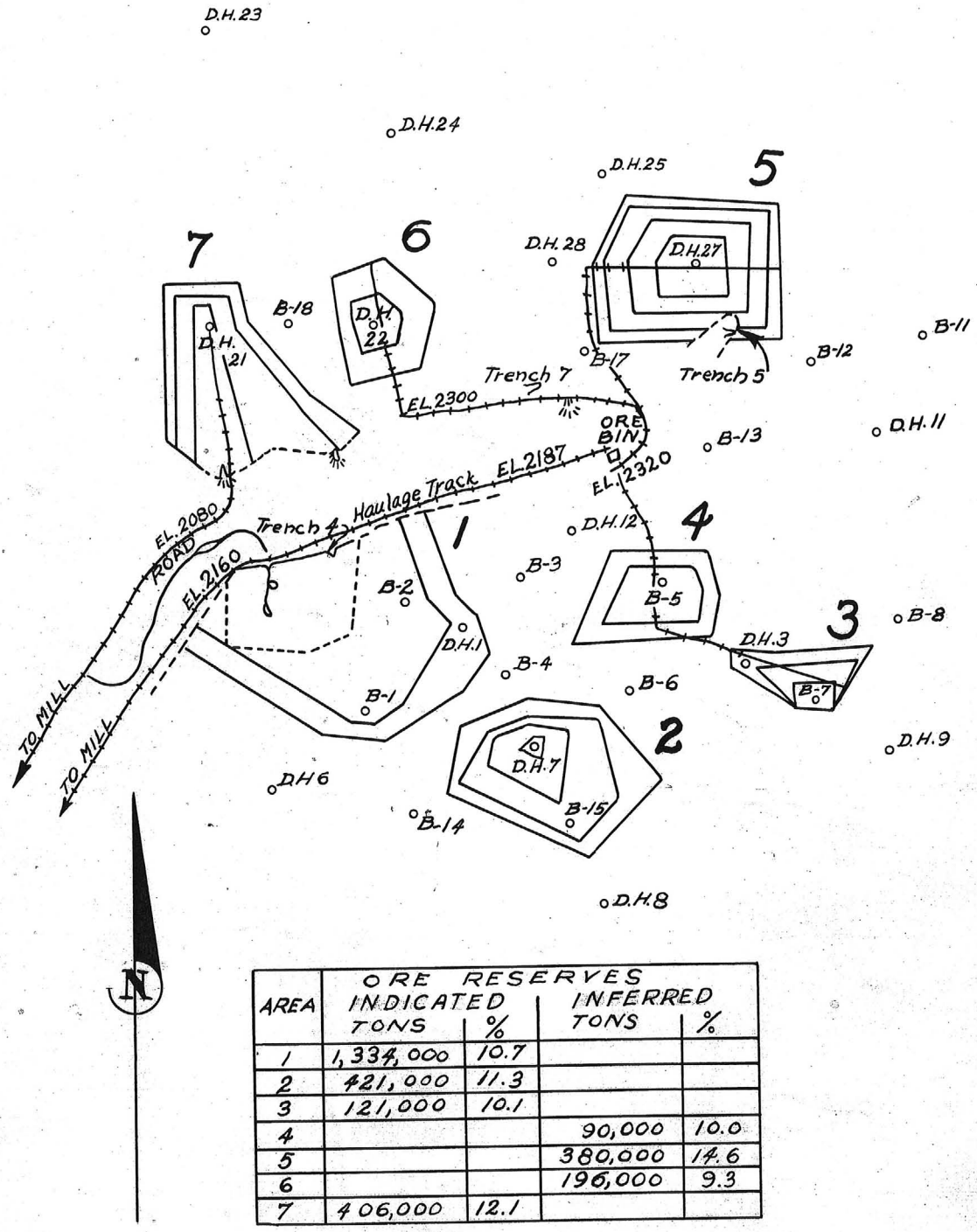

AREA	ORE RESERVES INDICATED TONS	%	INFERRED TONS	%
1	1,334,000	10.7		
2	421,000	11.3		
3	121,000	10.1		
4			90,000	10.0
5			380,000	14.6
6			196,000	9.3
7	406,000	12.1		

0 800 1600

SCALE IN FEET

FIGURE 2. ORE RESERVE BLOCKS

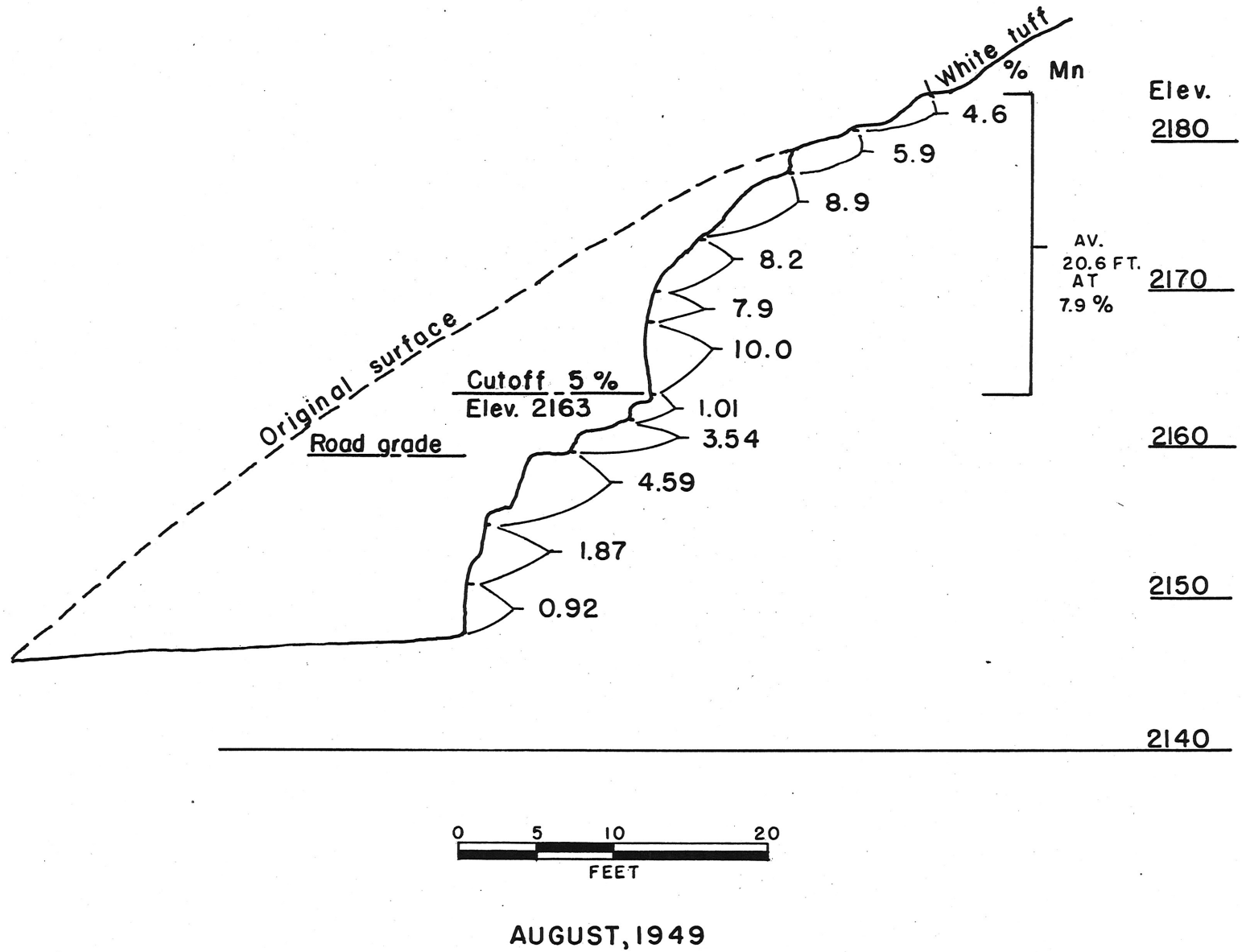

AUGUST, 1949

Figure 7. - Section assay map of Palo Verde trench.

3-c-7

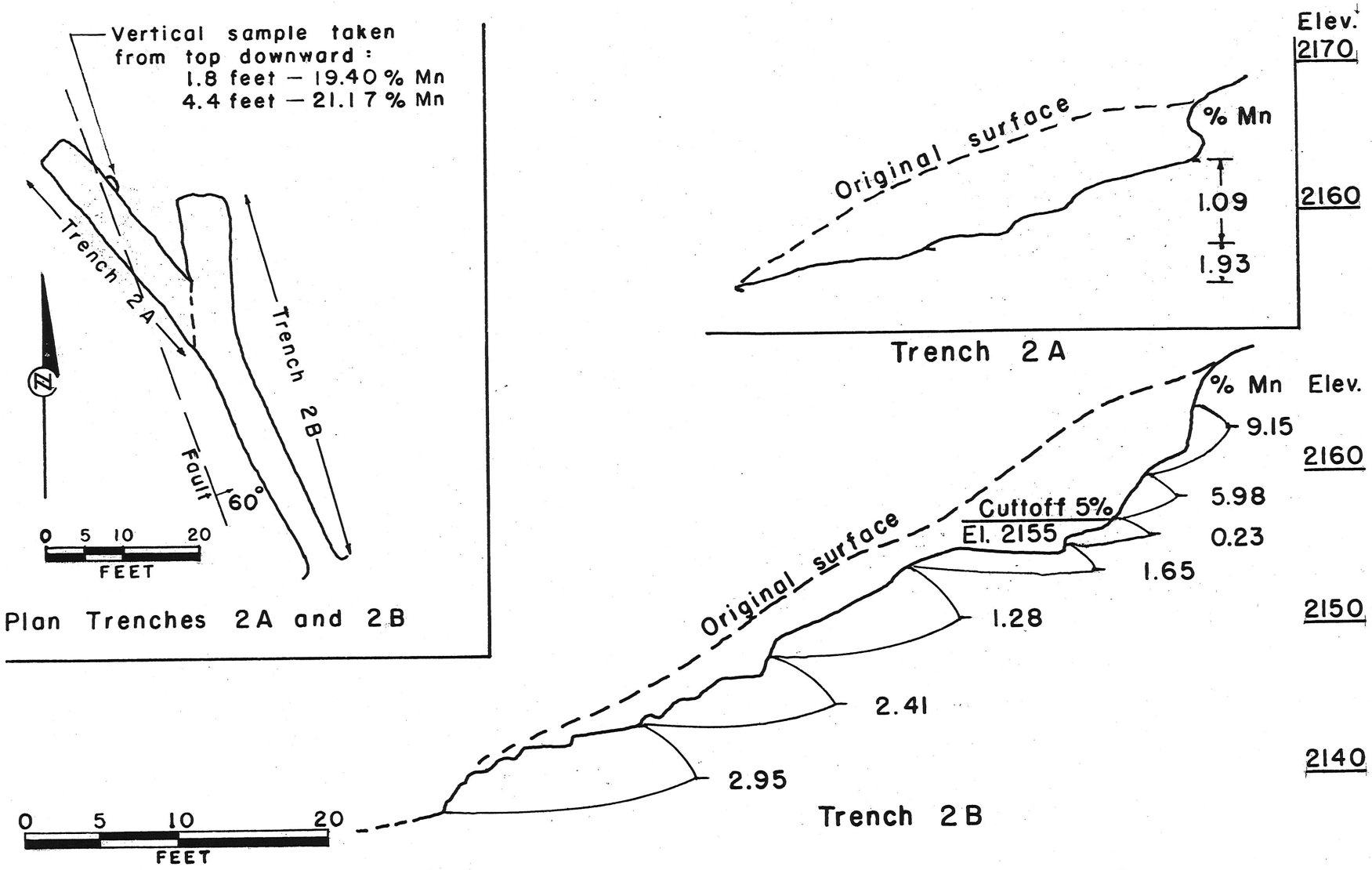

AUGUST, 1949

Figure 8.— Plan and section assay map of trenches 2A and 2B.

3-c-8

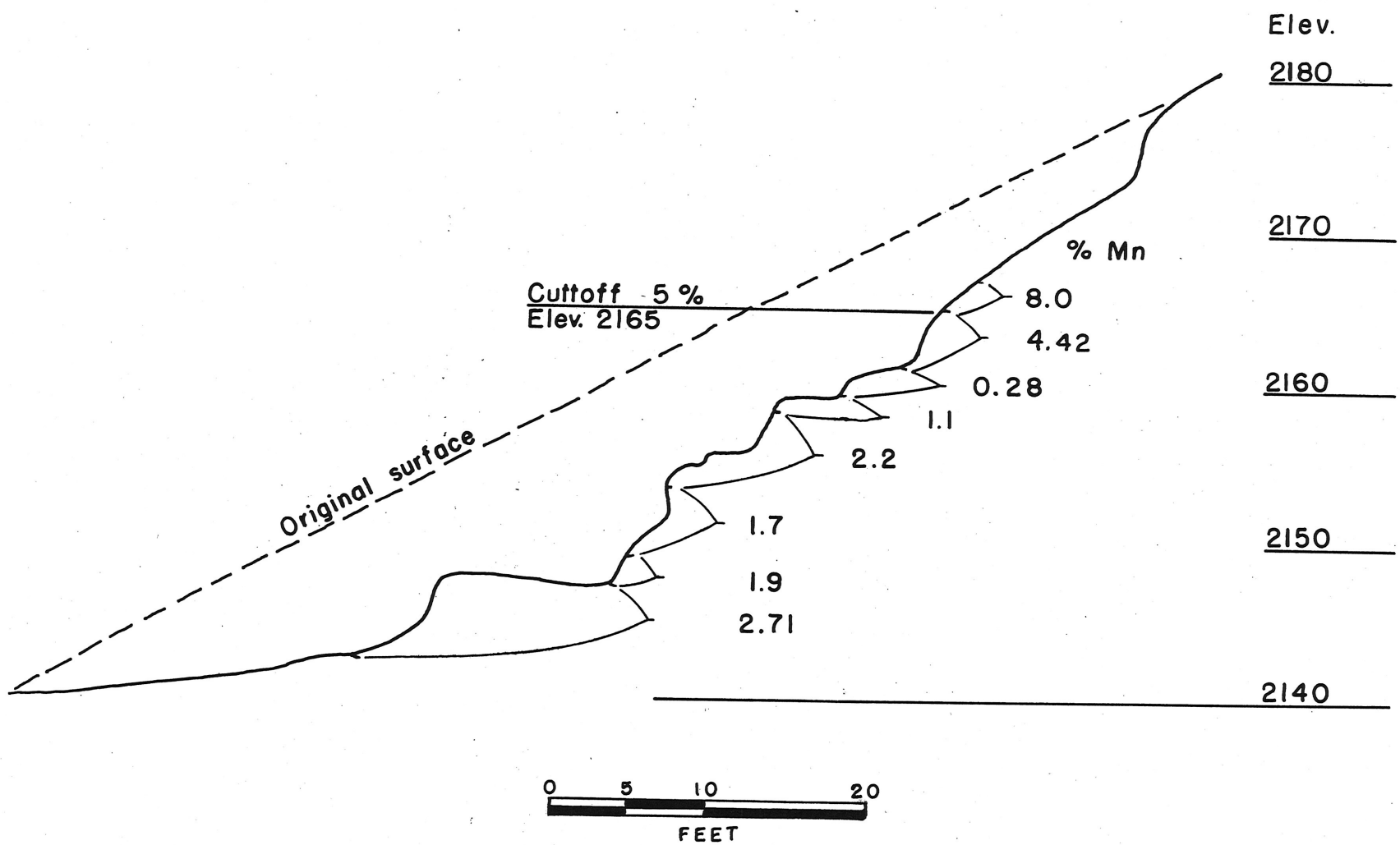

AUGUST, 1949

Figure 9. - Section assay map of trench 4a.

3-c-9

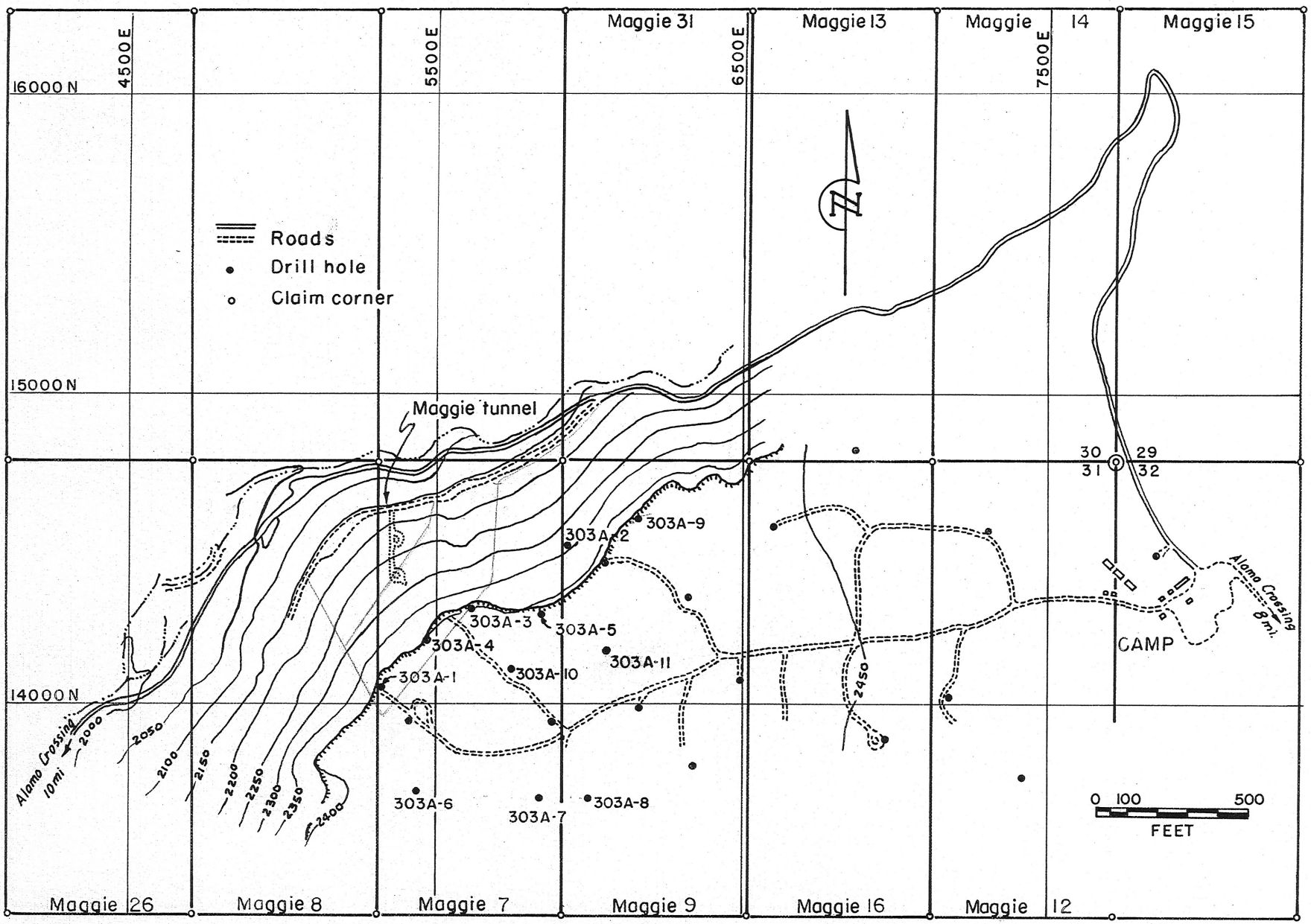

Artillery Peak Manganese Project 303-A, Mohave County, Arizona.

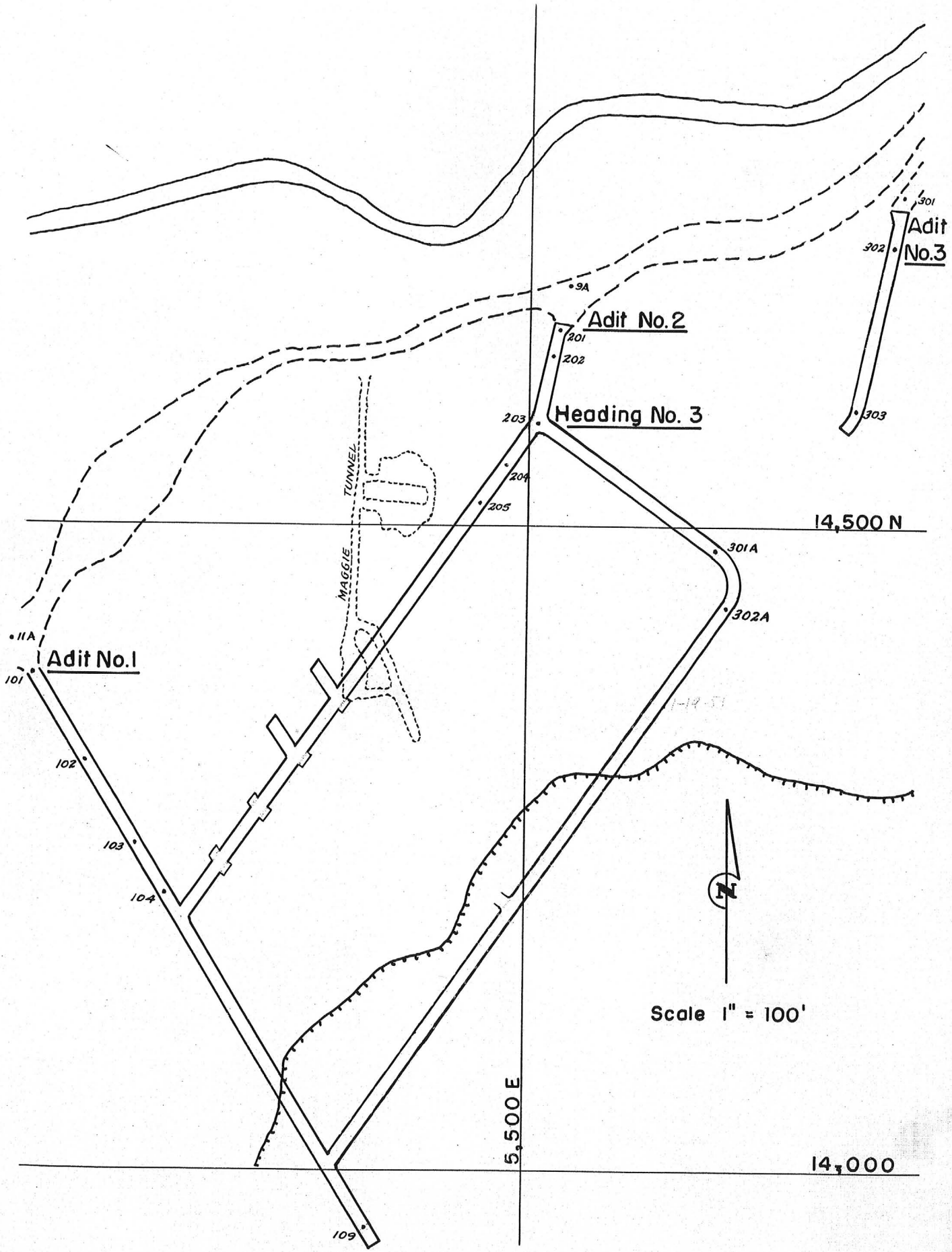

Artillery Peak Manganese Project 303-A.

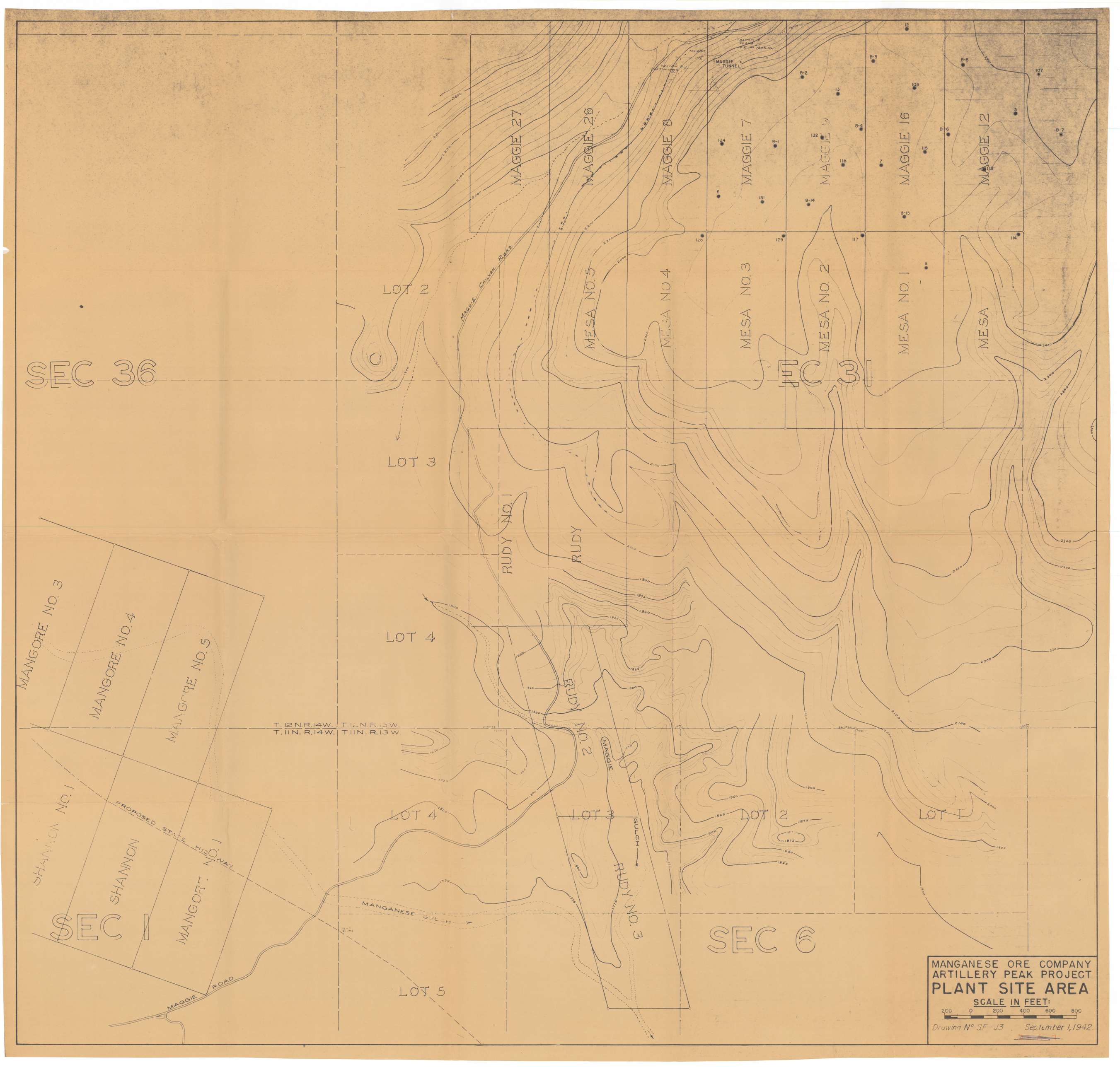
MANGANESE ORE COMPANY
ARTILLERY PEAK PROJECT
PLANT SITE AREA
SCALE IN FEET:
200 0 200 400 600 800
Drawing N° SF-J3
September 1, 1942.
SEC 36
SEC 31
SEC 1
SEC 6
LOT 2
LOT 3
LOT 4
LOT 5
LOT 4
LOT 3
LOT 2
LOT 1
MAGGIE 27
MAGGIE 26
MAGGIE 8
MAGGIE 7
MAGGIE 9
MAGGIE 16
MAGGIE 12
MESA NO. 5
MESA NO. 4
MESA NO. 3
MESA NO. 2
MESA NO. 1
MESA
RUDY NO. 1
RUDY
RUDY NO. 2
RUDY NO. 3
MAGGIE GULCH
MANGORE NO. 3
MANGORE NO. 4
MANGORE NO. 5
SHANNON NO. 1
SHANNON
MANGORE
MAGGIE CANYON ROAD
MAGGIE TUNNEL
PROPOSED STATE HIGHWAY
MANGANESE GULCH
MAGGIE ROAD
T. 12 N. R. 14 W. T. 12 N. R. 13 W.
T. 11 N. R. 14 W. T. 11 N. R. 13 W.